CHURCH ROAD
STREET IMPROVEMENTS

CITY OF FERNDALE

FEDERAL AID NO. STPUS-8033(001) & TIB NO. 8-2-985(007)-1

VICINITY MAP

NTS

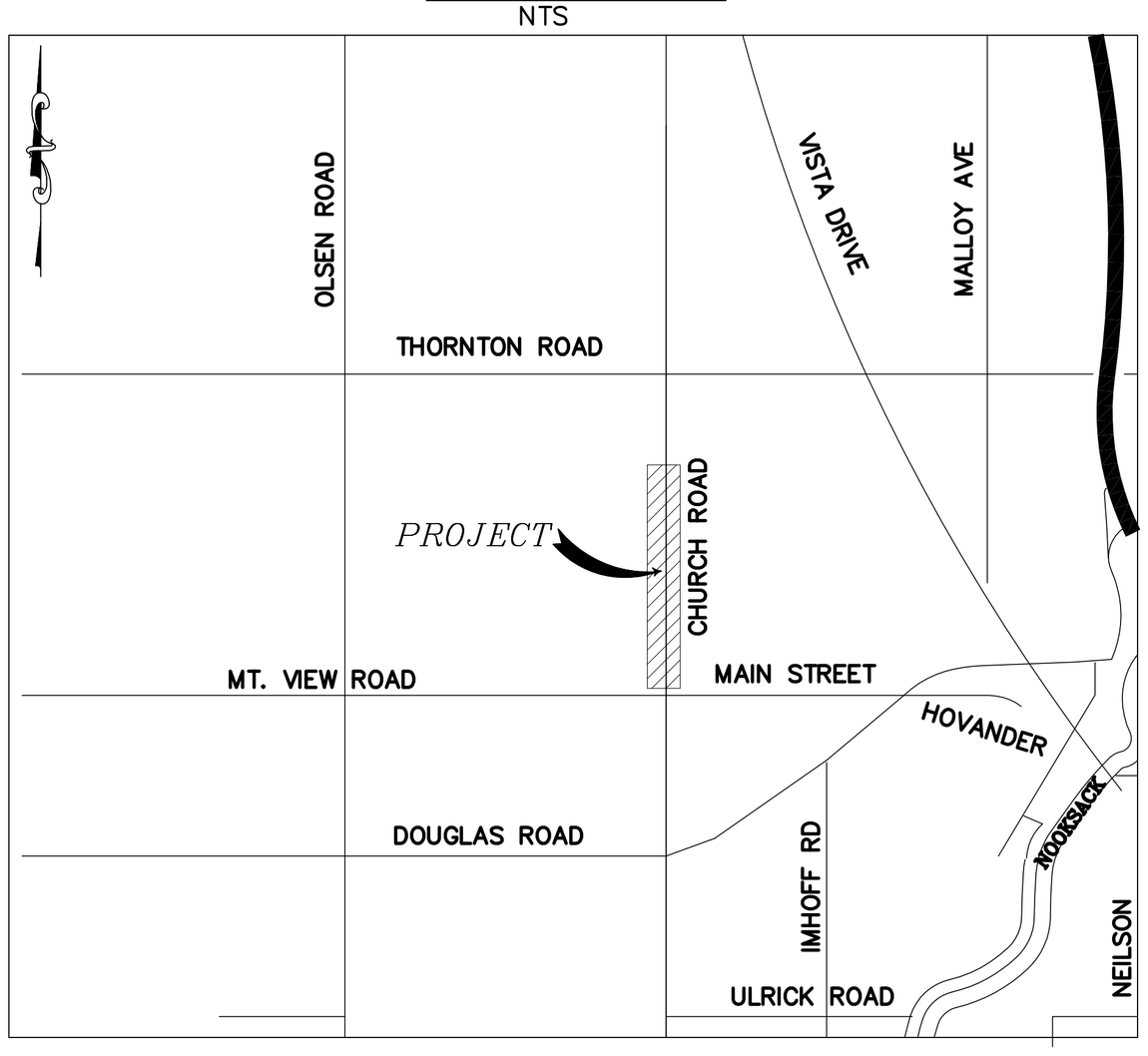

LEGEND

EXISTING

- BB — EX TOE OF BANK
- OHP — EX OVERHEAD POWER
- OHC — EXISTING OVERHEAD COMMUNICATIONS
- EX CONCRETE
- 95 — EX MAJOR CONTOUR
- 95 — EX MINOR CONTOUR
- EX CULVERT
- EX DITCH CL
- X — EX FENCE
- FO — EX FIBER OPTICS LINE
- G — EX GAS MAIN
- EX GRAVEL
- EX PROPERTY BOUNDARY
- PR — EX BURIED POWER LINE
- EX ROAD CL
- EX EDGE OF PAVEMENT
- EX RIGHT OF WAY
- EX TREE LINE
- SD — EX STORM DRAIN
- SS — EX SANITARY SEWER
- EX TRAFFIC STRIPING
- TB — EX TOP OF BANK
- T — EX BURIED TELEPHONE LINE
- TV — EX BURIED TV LINE
- W — EX WATER LINE
- EX SIDEWALK
- EX WETLANDS BOUDARY
- EX EASEMENT
- EX GRADE BREAK
- EX FLOWLINE
- EX BUILDING
- EX CONCRETE
- EX CRUSHED SURFACING
- EX MONITORING WELL
- EX SOIL BORING LOCATION
- EX GUY WIRE
- EX SEWER CLEANOUT
- EX JBOX
- EX STREET LIGHT
- MB — EX MAIL BOX
- EX WATER METER
- EX WATER SPIGOT
- EX WATER VALVE
- EX FIRE HYDRANT
- EX SEWER MANHOLE
- EX STORM DRAIN CATCH BASIN TYPE I
- EX STORM DRAIN CATCH BASIN TYPE II
- EX UTILITY POLE
- EX TRANSFORMER PAD
- P — EX POWER VAULT
- EX SIGN
- EX TELEPHONE PEDESTAL
- EX TREE STUMP
- EX TREE
- EX VEGETATION

PROPOSED

- BB — PROPOSED TOE OF BANK
- PROPOSED CONDUIT
- TB — PROPOSED TOP OF BANK
- 95 — PROPOSED MAJOR CONTOUR
- 95 — PROPOSED MINOR CONTOUR
- X — PROPOSED FENCE
- PROPOSED CONSTRUCTION EASEMENT
- PROPOSED GRADE BREAK
- PROPOSED GRAVEL
- PROPOSED PATH
- PROPOSED TRAFFIC STRIPE
- PROPOSED CONC. WALL
- PROPOSED MODULAR BLOCK WALL
- PROPOSED BACK OF CURB
- PROPOSED ROAD CL
- PROPOSED ROAD EDGE OF PAVEMENT
- PROPOSED ROAD FACE OF CURB
- PROPOSED ROAD LIP OF GUTTER
- PROPOSED SAWCUT
- SD — PROPOSED STORM DRAIN
- X — PROPOSED SILT FENCE
- SS — PROPOSED SANITARY SEWER
- W — PROPOSED WATERMAIN
- PROPOSED SIDEWALK
- PROPOSED PAVEMENT VALLEY
- PROPOSED ASPHALT APRON
- PROPOSED CONC. SIDEWALK / DRIVEWAY
- PROPOSED CRUSHED SURFACING
- PROPOSED STORM DRAIN CATCH BASIN TYPE I
- PROPOSED STORM DRAIN CATCH BASIN TYPE II
- PROP STORM CLEANOUT
- PROPOSED STORM DRAIN INLET
- PROPOSED SANITARY SEWER MANHOLE
- PROPOSED SANITARY SEWER CLEAN OUT
- PROPOSED HYDRANT
- PROPOSED WATER METER
- PROPOSED WATER VALVE
- PROPOSED COUPLER
- PROPOSED SIGN
- FLOW ARROW
- PROPOSED TREE

SHEET INDEX

1. COVER SHEET
2. EXISTING CONDITIONS STA 1+00 TO 6+50
3. EXISTING CONDITIONS STA 6+50 TO 12+00
4. EXISTING CONDITIONS STA 12+00 TO 17+50
5. EXISTING CONDITIONS STA 17+50 TO 23+50
6. EXISTING CONDITIONS STA 23+50 TO 29+00
7. EXISTING CONDITIONS STA 29+00 TO 35+00
8. EXISTING CONDITIONS STA 35+00 TO 37+66
9. TRAFFIC CONTROL PLAN
10. TESC PLAN
11. TESC PLAN
12. TESC PLAN
13. TESC PLAN
14. DEMOLITION PLAN
15. DEMOLITION PLAN
16. DEMOLITION PLAN
17. DEMOLITION PLAN
18. SEWER PLAN & PROFILE - SEWER STA 1+00 TO 6+50
19. SEWER PLAN & PROFILE - SEWER STA 6+50 TO 12+00
20. STREET IMPROVEMENTS - SEWER STA 12+00 TO 17+50
21. STREET IMPROVEMENTS - SEWER STA 17+50 TO 23+50
22. STREET IMPROVEMENTS - SEWER STA 23+50 TO 29+00
23. STREET IMPROVEMENTS - SEWER STA 29+00 TO 35+00
24. STREET IMPROVEMENTS - SEWER STA 35+00 TO 39+00
25. WATER PLAN
26. WATER PLAN
27. WATER PLAN
28. STREET IMPROVEMENTS - STORM STA 1+00 TO 6+50
29. STREET IMPROVEMENTS - STORM STA 6+50 TO 12+00
30. STREET IMPROVEMENTS - STORM STA 12+00 TO 17+50
31. STREET IMPROVEMENTS - STORM STA 17+50 TO 23+50
32. STREET IMPROVEMENTS - STORM STA 23+50 TO 29+00
33. STREET IMPROVEMENTS - STORM STA 29+00 TO 35+00
34. STREET IMPROVEMENTS - STORM STA 35+00 TO 39+00
35. INTERSECTION PROFILES
36. DRIVEWAY PROFILES
37. DRIVEWAY PROFILES
38. WALL PLAN AND PROFILE
39. WALL PLAN AND PROFILE
40. GRADING PLAN
41. GRADING PLAN
42. GRADING PLAN
43. GRADING PLAN
44. CHANNELIZATION PLAN
45. CHANNELIZATION PLAN
46. CHANNELIZATION PLAN
47. CROSS SECTIONS
48. CROSS SECTIONS
49. CROSS SECTIONS
50. CROSS SECTIONS
51. CROSS SECTIONS
52. CROSS SECTIONS
53. CROSS SECTIONS
54. CROSS SECTIONS
55. CROSS SECTIONS
56. CROSS SECTIONS
57. CROSS SECTIONS
58. CROSS SECTIONS
59. DETAIL SHEET
60. DETAIL SHEET
61. DETAIL SHEET
62. DETAIL SHEET
63. DETAIL SHEET
64. TYPICAL SECTIONS

LUIS PONCE — STATE OF WASHINGTON — 38378 — REGISTERED PROFESSIONAL ENGINEER — 1/5/17

00616.001 4/17/17 KJ

1/05/17 AS-BUILT

DESIGNED BY LP/GKG
DRAWN BY LMC
CHECKED BY LP

R&E REICHHARDT & EBE ENGINEERING, INC.
CONSULTING ENGINEERS
PO Box 978 423 Front St., Ste 201 Lynden, Washington 98264
Ph (360) 354-3687 Fax (360) 354-0407

NO.	DATE	REVISION	BY

CITY OF FERNDALE
2095 MAIN STREET
FERNDALE, WA 98248

CHURCH ROAD
STREET IMPROVEMENTS
COVER SHEET

JOB# / DWG: 07037 COVER
DATE: 1-5-17
SCALE: H: n/a V: n/a
SHEET: 1 of 64

P:\Projects\07037\dwg\CD AS BUILT-CONSTRUCTION\Plan Sheets\AB 07037 COVER-CONST.dwg 3/17/2017 1:07:47 PM

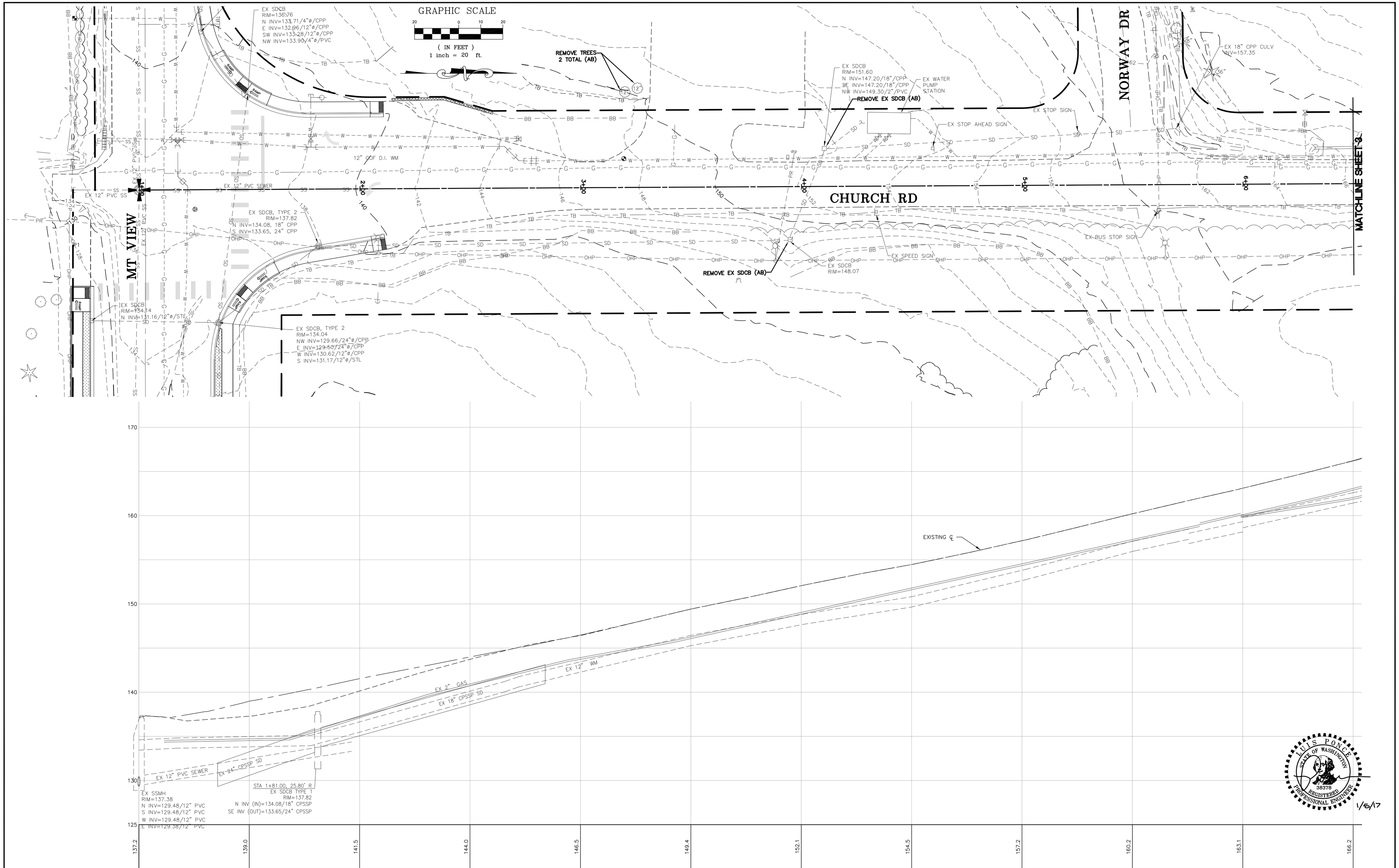

00616.001 4/17/17 KJ

1/05/17 **AS-BUILT**

DESIGNED BY	LP/GKG
DRAWN BY	LMC
CHECKED BY	LP

R&E
REICHHARDT & EBE
ENGINEERING, INC.
CONSULTING ENGINEERS
PO Box 978 423 Front St., Ste 201 Lynden, Washington 98264
Ph (360) 354-3687 Fax (360) 354-0407

NO.	DATE	REVISION	BY

CITY OF FERNDALE
2095 MAIN STREET
FERNDALE, WA 98248

CHURCH ROAD
STREET IMPROVEMENTS
EXISTING CONDITIONS - 1+00 TO 6+50

JOB# / DWG	DATE
07037 EX COND	1-5-17
SCALE: H: 1"=20' V: '"=5'	SHEET: 2 of 64

P:\Projects\07037\dwg\CD AS BUILT-CONSTRUCTION\Plan Sheets\AB 07037 EX CONDS-CONST.dwg, 3/17/2017 1:10:00 PM

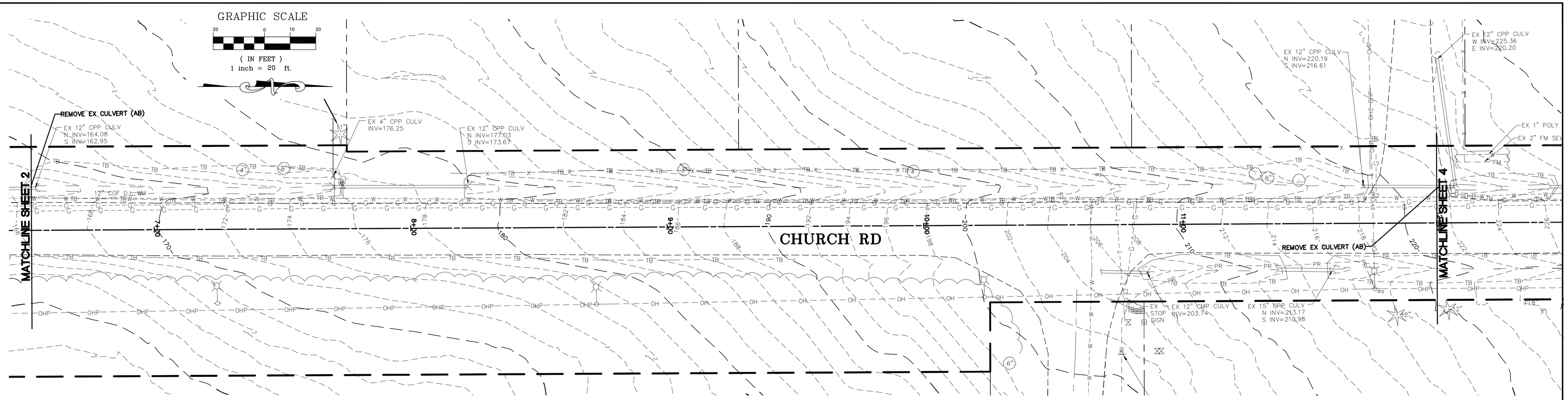

LUIS PONCE
STATE OF WASHINGTON
38378
REGISTERED
PROFESSIONAL ENGINEER
1/5/17

00616.003 4/17/17 KJ

P:\Projects\07037\Dwg\CD\ AS BUILT-CONSTRUCTION\Plan Sheets\AB 07037 EX COND-CONST.dwg 3/17/2017 1:10:27 PM

1/05/17 AS-BUILT

DESIGNED BY	LP/GKG
DRAWN BY	LMC
CHECKED BY	LP

R&E
REICHHARDT & EBE
ENGINEERING, INC.
CONSULTING ENGINEERS
PO Box 978 423 Front St., Ste 201 Lynden, Washington 98264
Ph (360) 354-3687 Fax (360) 354-0407

NO.	DATE	REVISION	BY

CITY OF FERNDALE
2095 MAIN STREET
FERNDALE, WA 98248

CHURCH ROAD
STREET IMPROVEMENTS
EXISTING CONDITIONS - 6+50 TO 12+00

JOB# / DWG	DATE
07037 EX COND	1-5-17
SCALE	SHEET
H: 1"=20' V: 1"=5'	3 of 64

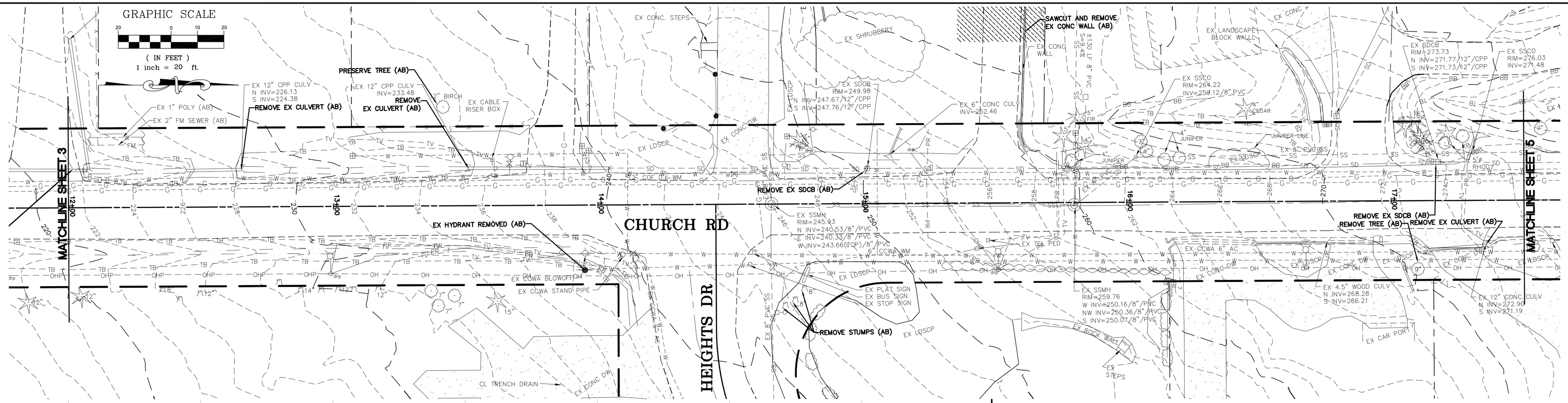

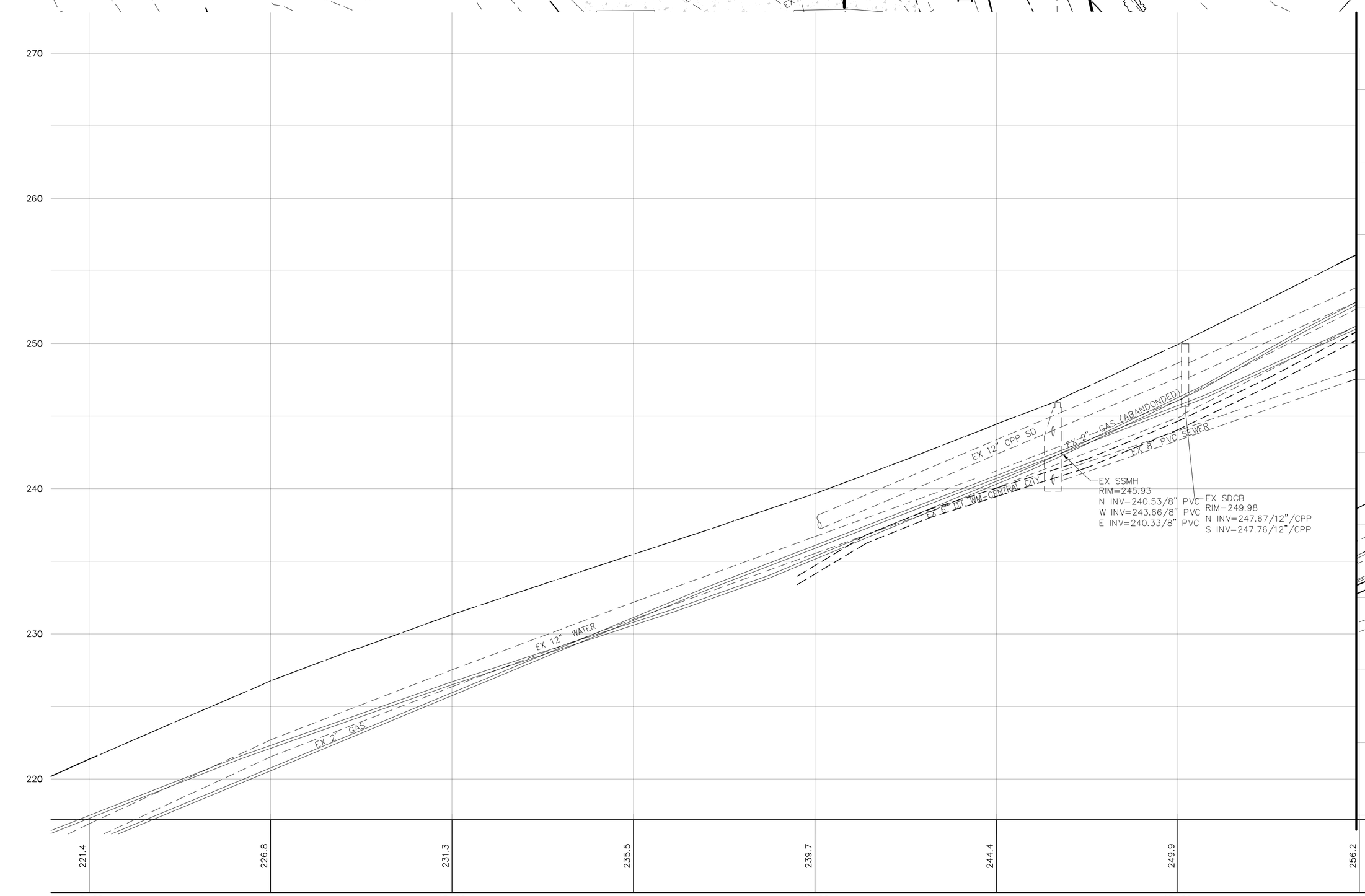

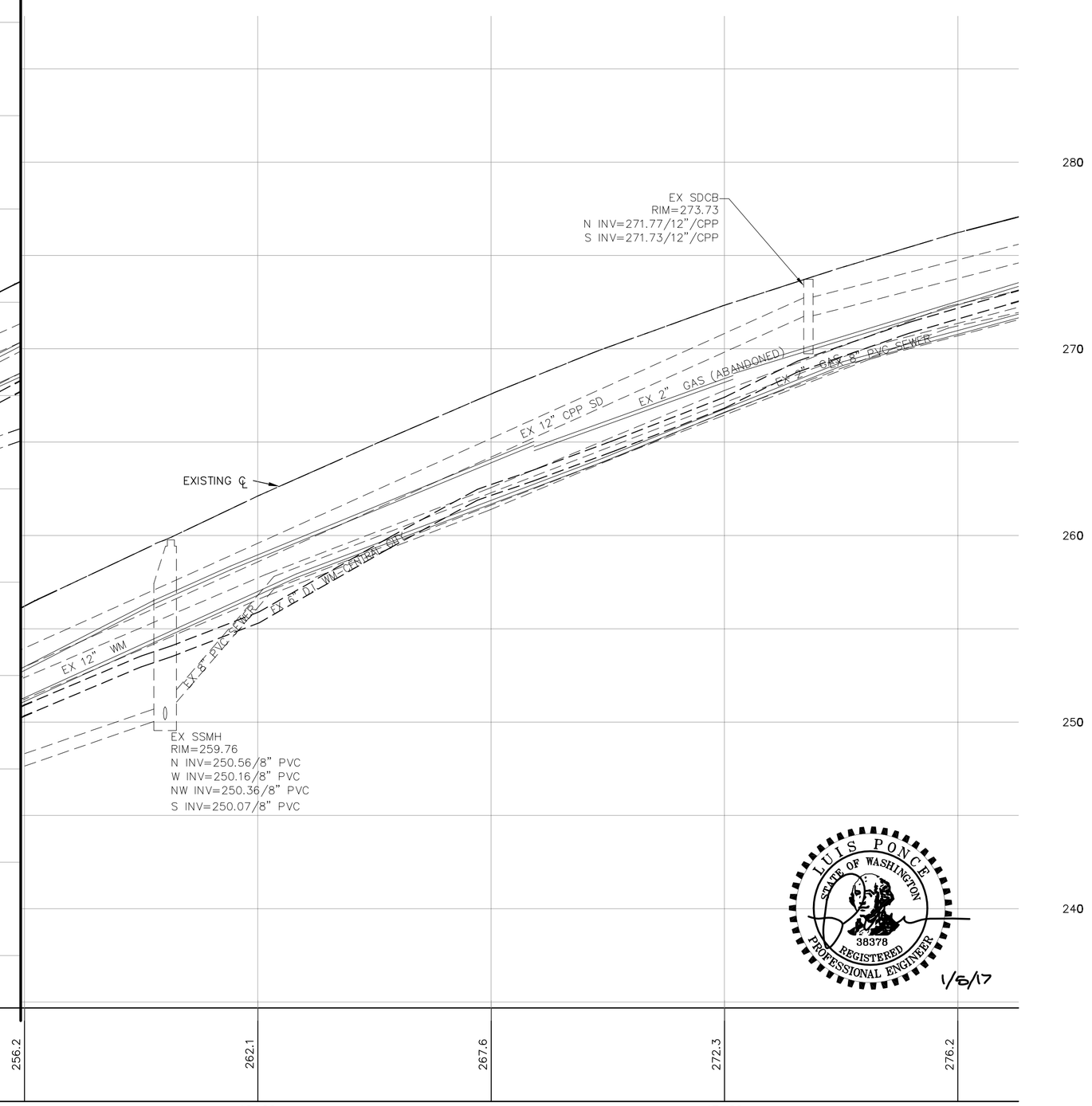

LUIS PONCE
STATE OF WASHINGTON
38378
REGISTERED
PROFESSIONAL ENGINEER
1/6/17

00616.004 4/14/17 KJ

1/05/17 **AS-BUILT**

DESIGNED BY	LP/GKG
DRAWN BY	LMC
CHECKED BY	LP

R&E
REICHHARDT & EBE
ENGINEERING, INC.
CONSULTING ENGINEERS
PO Box 978 423 Front St., Ste 201 Lynden, Washington 98264
Ph (360) 354-3687 Fax (360) 354-0407

NO.	DATE	REVISION	BY

CITY OF FERNDALE
2095 MAIN STREET
FERNDALE, WA 98248

CHURCH ROAD
STREET IMPROVEMENTS
EXISTING CONDITIONS - 12+00 TO 17+50

JOB# / DWG	DATE
07037 EX COND	1-5-17
SCALE	SHEET
H: 1"=20' V: 1"=5'	4 of 64

P:\Projects\07037\dwg\CD\ AS BUILT-CONSTRUCTION\Plan Sheets\AB 07037 EX COND-CONST.dwg, 3/17/2017 1:10:58 PM

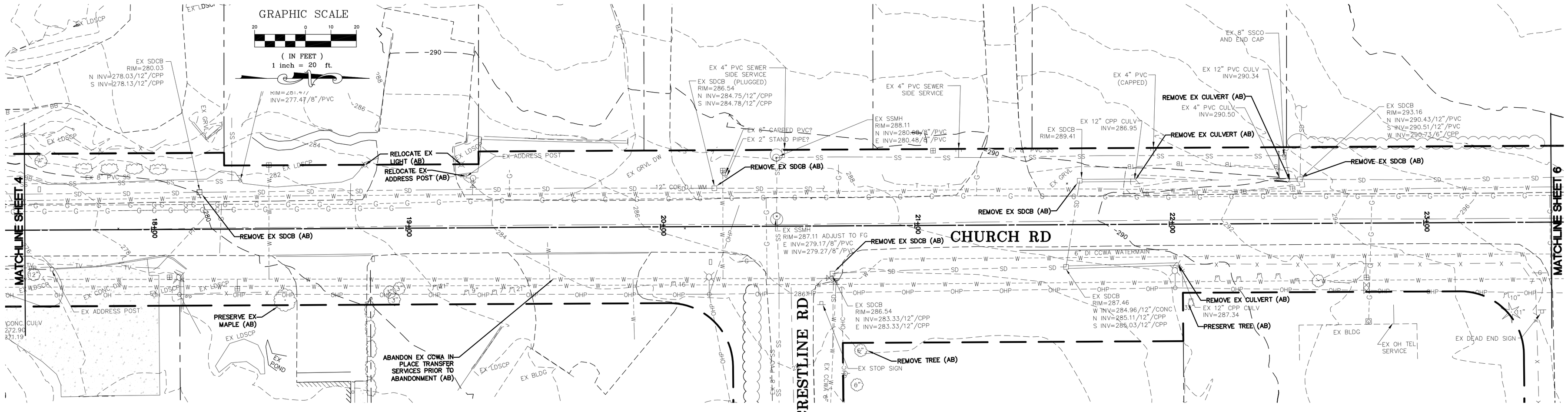

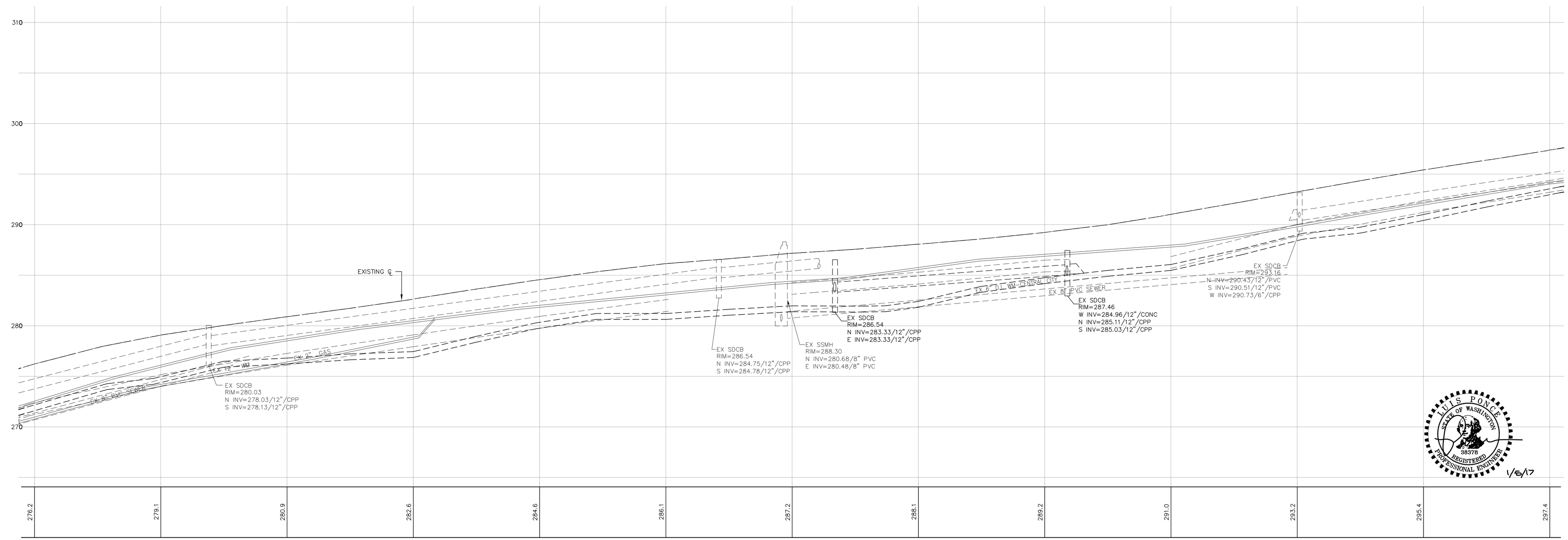

LUIS PONCE
STATE OF WASHINGTON
38378
REGISTERED
PROFESSIONAL ENGINEER
1/5/17

00616.005 4/17/17 KJ

1/05/17 AS-BUILT	DESIGNED BY LP/GKG DRAWN BY LMC CHECKED BY LP	R&E REICHHARDT & EBE ENGINEERING, INC. CONSULTING ENGINEERS PO Box 978 423 Front St., Ste 201 Lynden, Washington 98264 Ph (360) 354-3687 Fax (360) 354-0407	NO. / DATE / REVISION / BY	CITY OF FERNDALE 2095 MAIN STREET FERNDALE, WA 98248	CHURCH ROAD STREET IMPROVEMENTS EXISTING CONDITIONS - 17+50 TO 23+50	JOB# / DWG 07037 EX COND SCALE H: 1"=20' V: 1"=5'	DATE 1-5-17 SHEET 5 of 64

P:\Projects\07037\dwg\CD\ AS BUILT-CONSTRUCTION\Plan Sheets\AB 07037 EX COND-CONST.dwg, 3/28/2017 9:26:40 AM

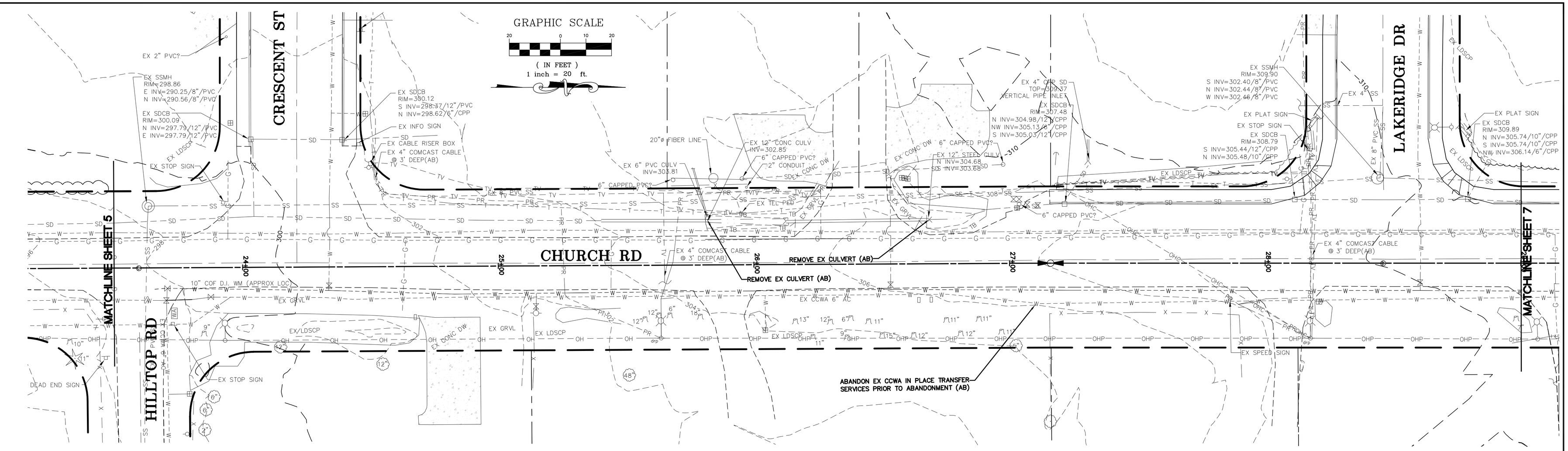

LUIS PONCE STATE OF WASHINGTON 38378 REGISTERED PROFESSIONAL ENGINEER 1/5/17

00616.006 4/17/17 KJ

1/05/17 AS-BUILT	DESIGNED BY LP/GKG DRAWN BY LMC CHECKED BY LP	REICHHARDT & EBE ENGINEERING, INC. CONSULTING ENGINEERS PO Box 978 423 Front St., Ste 201 Lynden, Washington 98264 Ph (360) 354-3687 Fax (360) 354-0407	NO. / DATE / REVISION / BY	CITY OF FERNDALE 2095 MAIN STREET FERNDALE, WA 98248	CHURCH ROAD STREET IMPROVEMENTS EXISTING CONDITIONS - 23+50 TO 29+00	JOB# / DWG 07037 EX COND SCALE H: 1"=20' V: 1"=5'	DATE 1-5-17 SHEET 6 of 64

P:\Projects\07037\dwg\CD AS BUILT-CONSTRUCTION\Plan Sheets\AB 07037 EX COND-CONST.dwg, 3/17/2017 11:15:57 PM

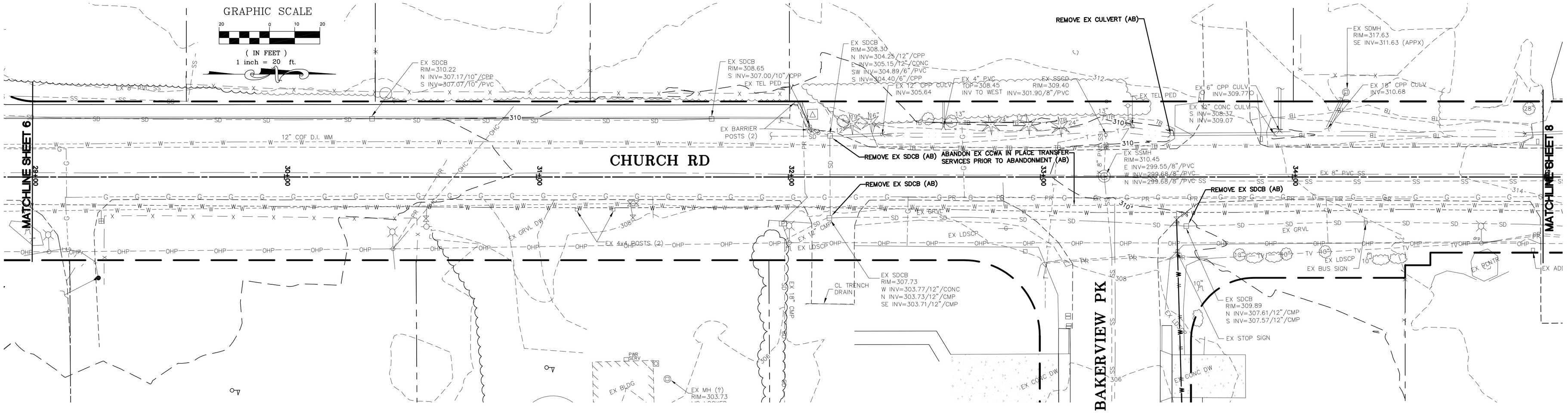

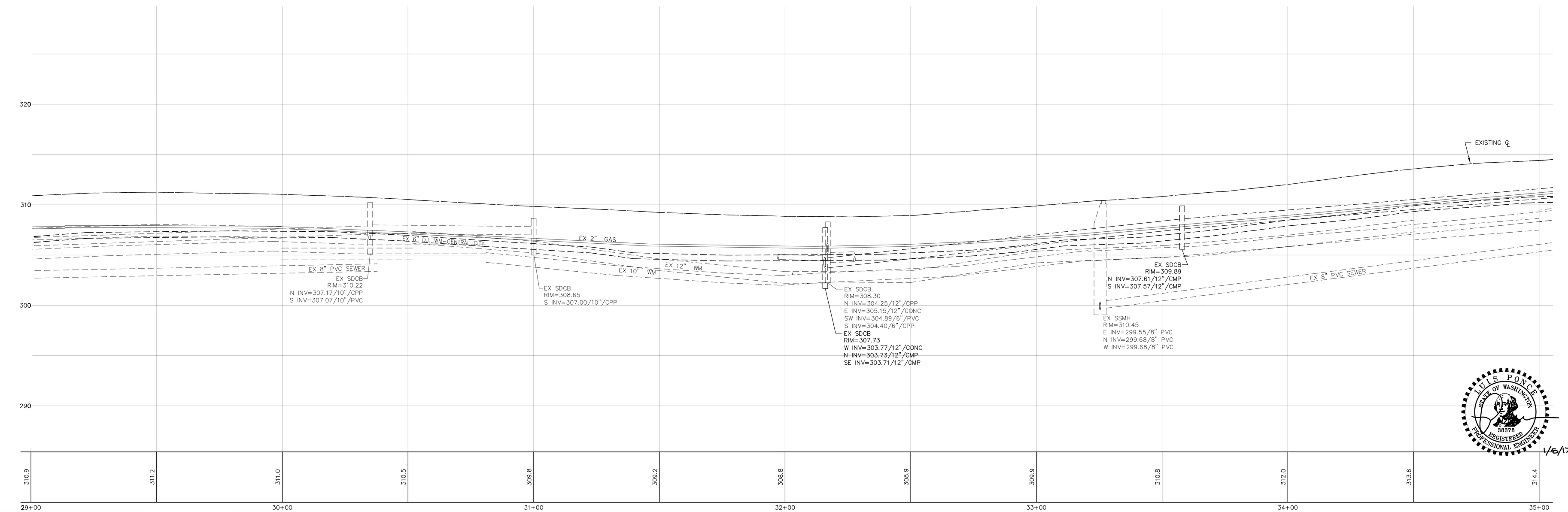

LUIS PONCE
STATE OF WASHINGTON
38378
REGISTERED PROFESSIONAL ENGINEER
1/6/17

00616.007 4/17/17 KJ

1/05/17 **AS-BUILT**

DESIGNED BY	LP/GKG
DRAWN BY	LMC
CHECKED BY	LP

R&E
REICHHARDT & EBE
ENGINEERING, INC.
CONSULTING ENGINEERS
PO Box 978 423 Front St., Ste 201 Lynden, Washington 98264
Ph (360) 354-3687 Fax (360) 354-0407

NO.	DATE	REVISION	BY

CITY OF FERNDALE
2095 MAIN STREET
FERNDALE, WA 98248

CHURCH ROAD
STREET IMPROVEMENTS
EXISTING CONDITIONS - 29+00 TO 35+00

JOB# / DWG	DATE
07037 EX COND	1-5-17
SCALE	SHEET
H: 1"=20' V: 1"=5'	7 of 64

P:\Projects\07037\dwg\CD AS BUILT-CONSTRUCTION\Plan Sheets\AB 07037 EX COND-CONST.dwg, 3/17/2017 1:12:28 PM

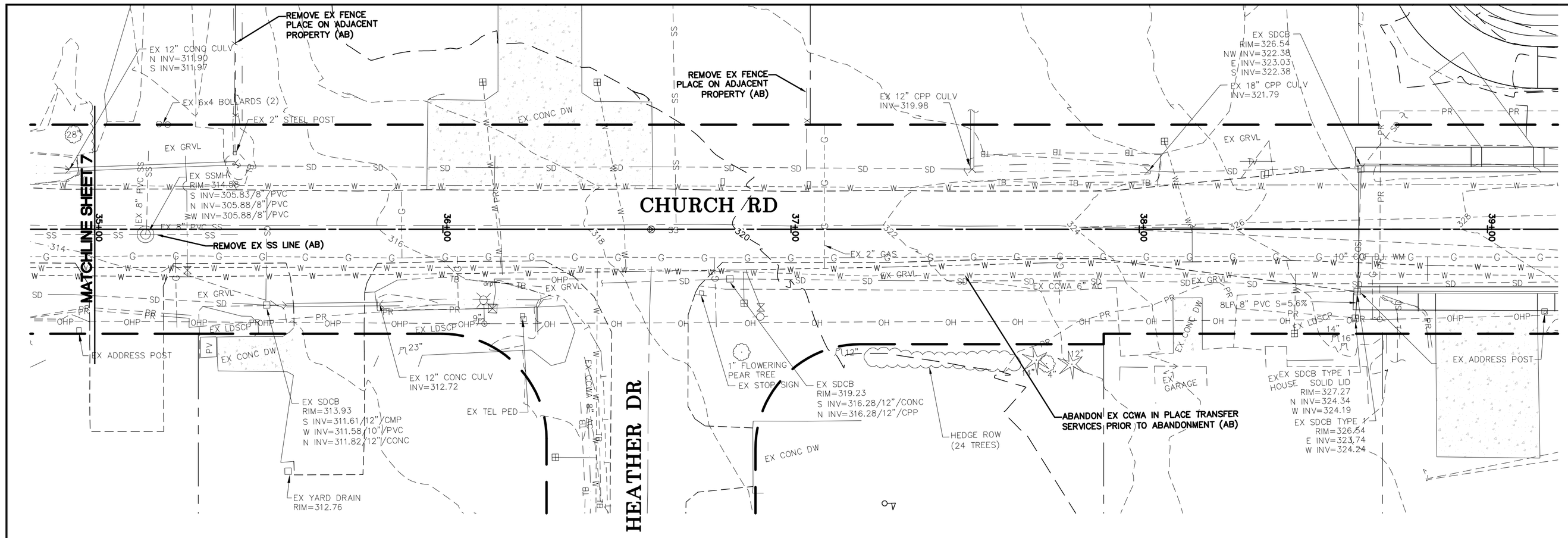

GRAPHIC SCALE

20 0 10 20

(IN FEET)
1 inch = 20 ft.

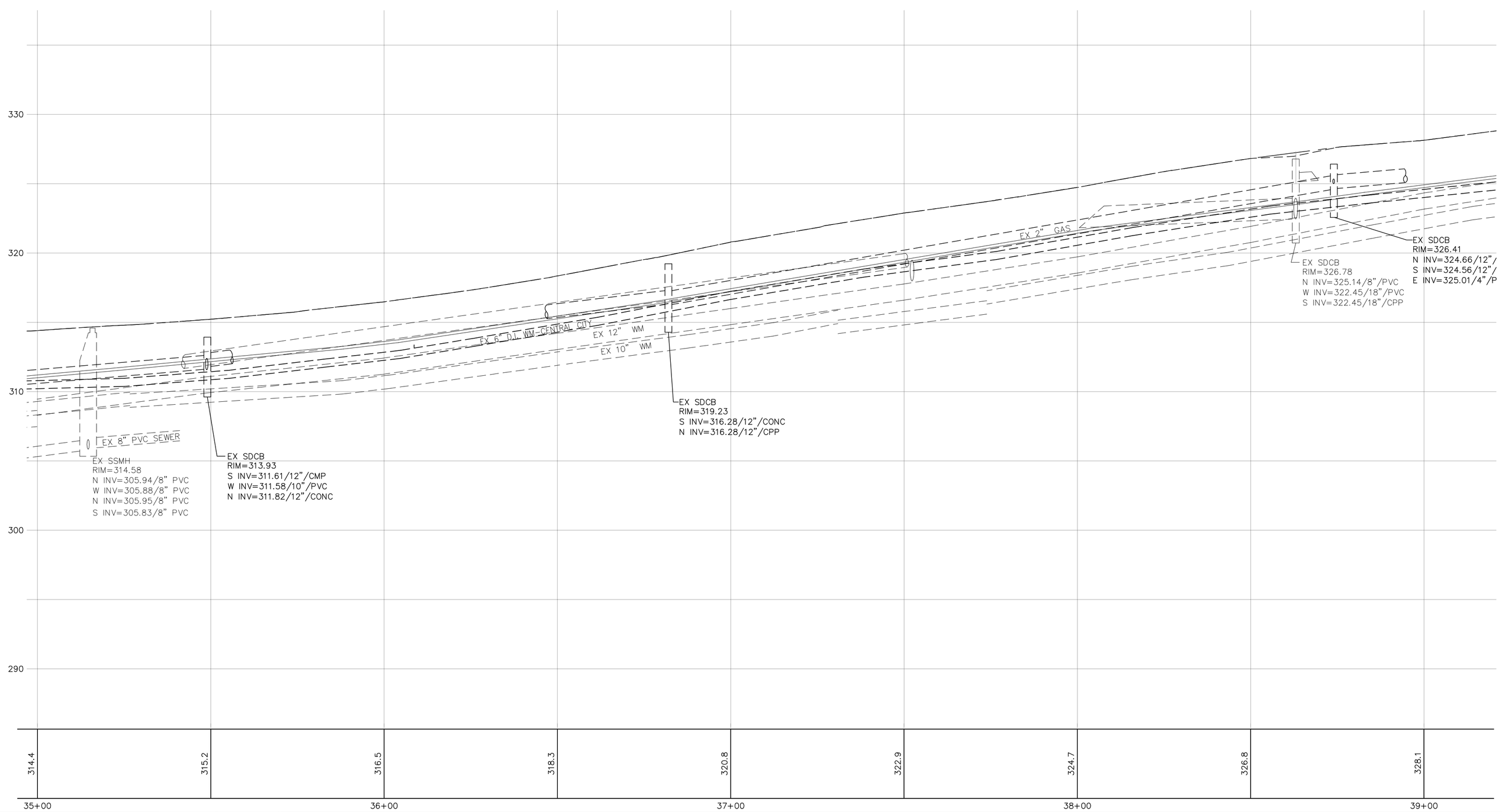

00616.008 4/17/17 KJ

P:\Projects\07037\dwg\CD AS BUILT-CONSTRUCTION\Plan Sheets\AB 07037 EX COND-CONST.dwg, 3/17/2017 1:12:58 PM

1/05/17 **AS-BUILT**

DESIGNED BY	LP/GKG
DRAWN BY	LMC
CHECKED BY	LP

R&E
REICHHARDT & EBE
ENGINEERING, INC.
CONSULTING ENGINEERS
PO Box 978 423 Front St., Ste 201 Lynden, Washington 98264
Ph (360) 354-3687 Fax (360) 354-0407

NO.	DATE	REVISION	BY

CITY OF FERNDALE
2095 MAIN STREET
FERNDALE, WA 98248

CHURCH ROAD
STREET IMPROVEMENTS
EXISTING CONDITIONS - 35+00 TO 37+66

JOB# / DWG	DATE
07037 EX COND	1-5-17
SCALE	SHEET
H: 1"=20' V: 1"=5'	8 of 64

LUIS PONCE
STATE OF WASHINGTON
38378
REGISTERED
PROFESSIONAL ENGINEER
1/5/17

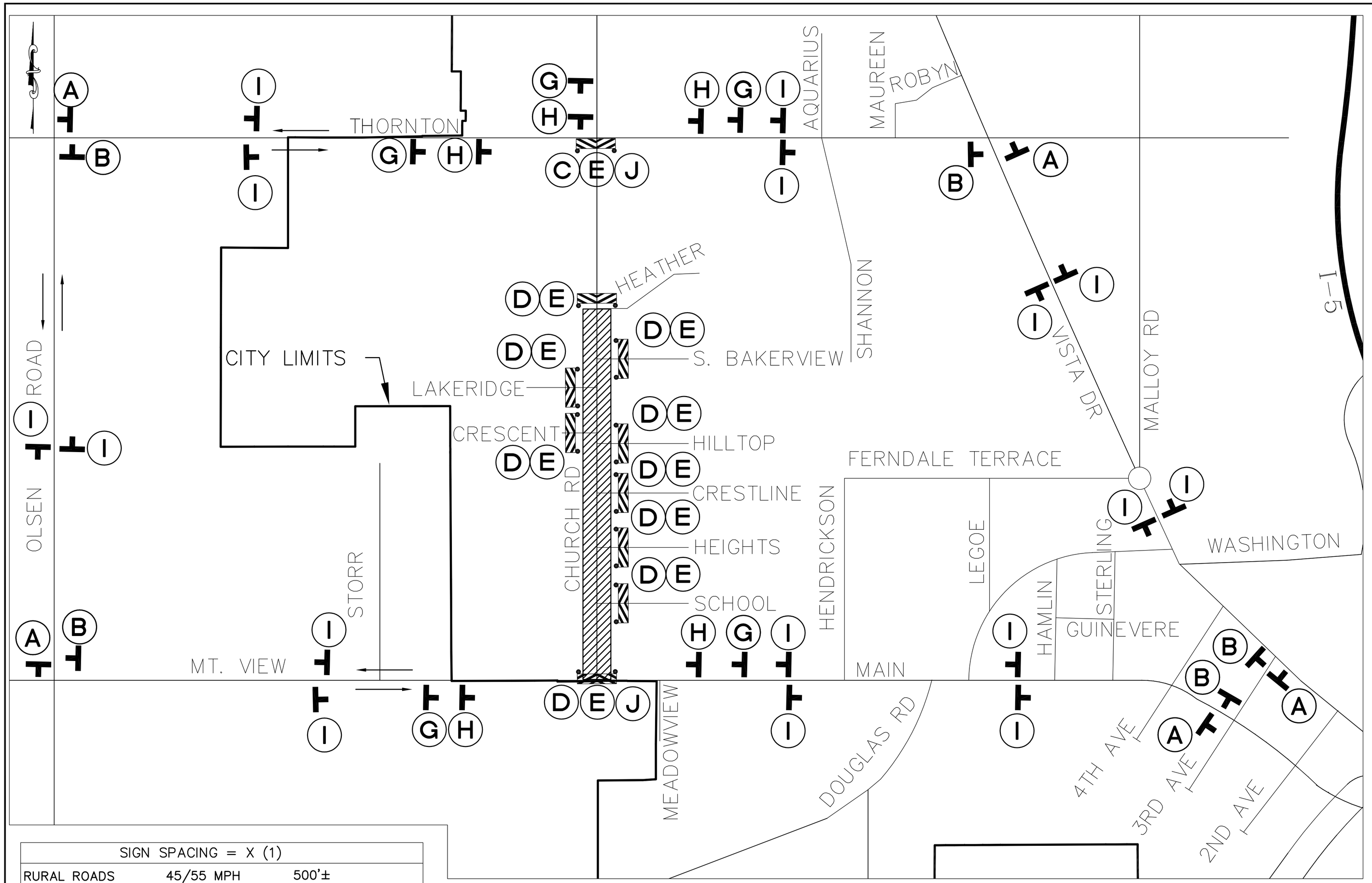

LEGEND

= DIRECTION OF TRAFFIC

= SIGN (SHOWN FACING LEFT)

= PROPOSED WORK AREA

A	DETOUR	M4–10L
B	DETOUR	M4–10R
C	ROAD CLOSED LOCAL TRAFFIC ONLY	R 11–3
D	ROAD CLOSED TO THRU TRAFFIC	R 11–4
E		TYPE III R AND TYPE III L, BARRICADE WITH 2 TYPE A FLASHING WARNING LIGHTS
F	END DETOUR	M4–8A
G	ROAD CLOSED AHEAD	W 20–3
H	DETOUR AHEAD	W20–2
I	DETOUR	M4–8
J		M6–4

SIGN SPACING = X (1)		
RURAL ROADS	45/55 MPH	500'±
URBAN ARTERIALS & RURAL ROADS	35/40 MPH	350'±
RURAL ROADS, URBAN ARTERIALS, RESIDENTIAL & BUSINESS DISTRICTS	25/30 MPH	200'± (2)
URBAN STREETS	25 MPH OR LESS	100'± (2)
ALL SIGNS ARE BLACK ON ORANGE UNLESS DESIGNATED OTHERWISE		

(1) ALL SPACING MAY BE ADJUSTED TO ACCOMODATE AT–GRADE INTERSECTIONS AND DRIVEWAYS.

(2) THIS SIGN SPACING MAY BE REDUCED IN URBAN AREAS TO FIT ROADWAY CONDITIONS.

LUIS PONCE — STATE OF WASHINGTON — 38378 — REGISTERED PROFESSIONAL ENGINEER — 1/5/17

00616.009 4/17/17 KJ

SUBMITTED WITH DESIGN PLAN

DESIGNED BY CMS
DRAWN BY CMS
CHECKED BY LP

REICHHARDT & EBE ENGINEERING, INC.
CONSULTING ENGINEERS
PO Box 978 423 Front St., Ste 201 Lynden, Washington 98264
Ph (360) 354–3687 Fax (360) 354–0407

NO.	DATE	REVISION	BY

CITY OF FERNDALE
2095 MAIN STREET
FERNDALE, WA 98248

CHURCH ROAD
STREET IMPROVEMENTS
TRAFFIC CONTROL PLAN

JOB# / DWG: AB 07037 TRAFFIC–CONST.DWG
DATE: JAN 5–17
SCALE: H: n/a V: n/a
SHEET: 9 of 64

P:\Projects\07037\dwg\CD AS BUILT-CONSTRUCTION\Plan Sheets\AB 07037 TRAFFIC-CONST.dwg, 3/17/2017 1:13:41 PM

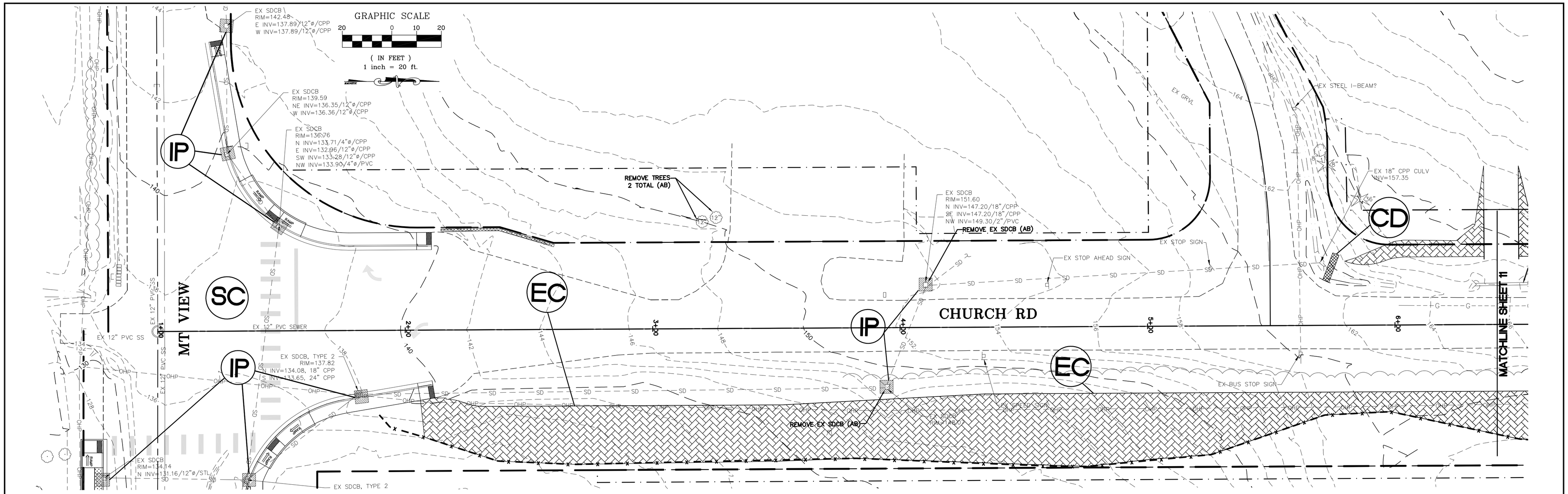

LEGEND

SYMBOL	
	WASHINGTON STATE DEPT. OF ECOLOGY BEST MANAGEMENT PRACTICES (BMP) REF.: STORMWATER MANAGEMENT MANUAL FOR WESTERN WASHINGTON, 2005
CE	BMP E2.10 STABILIZED CONSTRUCTION ENTRANCE AND TIRE WASH SEE DETAIL THIS SHEET
FF	BMP E3.10 FILTER FENCE – SEE DETAIL THIS SHEET
IP	BMP E3.30 INLET PROTECTION – PLACE SEDIMENT FILTER AROUND OR OVER CATCH BASINS
	PROPOSED EROSION CONTROL BLANKET
EC	GEOTEXTILE ENCASED CHECK DAM
CD	STREET CLEANING
SC	

GENERAL NOTES:

1. The contractor shall be responsible for implementation of the sedimentation and erosion control measures as shown.
2. The constructed erosion control and sedimentation plan shall be approved by the engineer prior to performing any site grading or clearing.
3. All steep slope excavations greater than 2:1 shall be covered at the end of each working day.
4. Maintenance and operation of the erosion control and sedimentation system shall be the responsibility of the contractor. The contractor shall be responsible for implementation of the sedimentation and erosion control measures.
5. Any vegetation not in the construction area shall be left undisturbed.
6. All clearing limits shall be visibly marked prior to clearing.
7. All storm drain facilities within the project boundary are to be cleared of sediment and debris prior to final acceptance of the project.
8. This plan represents the minimum requirements for this project. Additional erosion controls may be required by the engineer as are found necessary to prevent contamination of surface waters.
9. The temporary erosion control systems shall be installed prior to all other site construction.
10. The contractor will have a water truck available on site at all times when traffic is running on gravel base or crushed surfacing. Contractor will water the road surface often enough to abate dust as approved by the Engineer. Watering will include weekends and holidays.

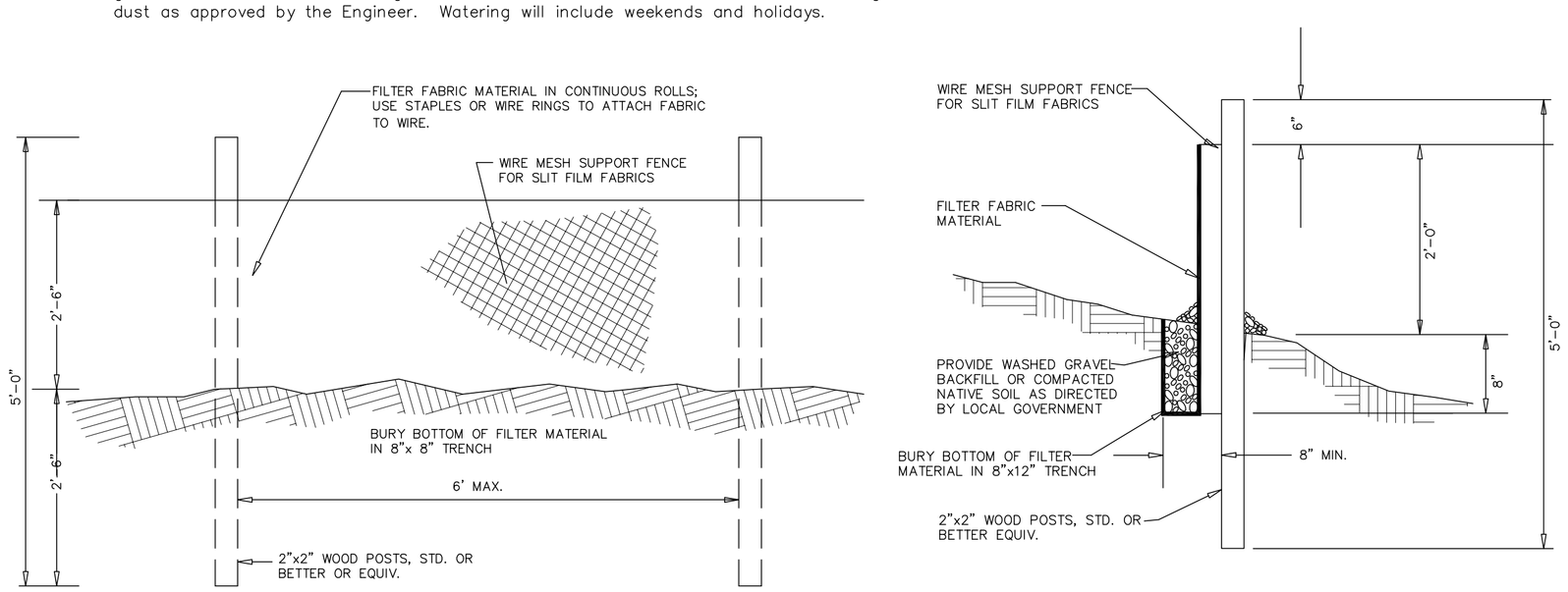

FILTER FABRIC FENCE DETAIL

NTS

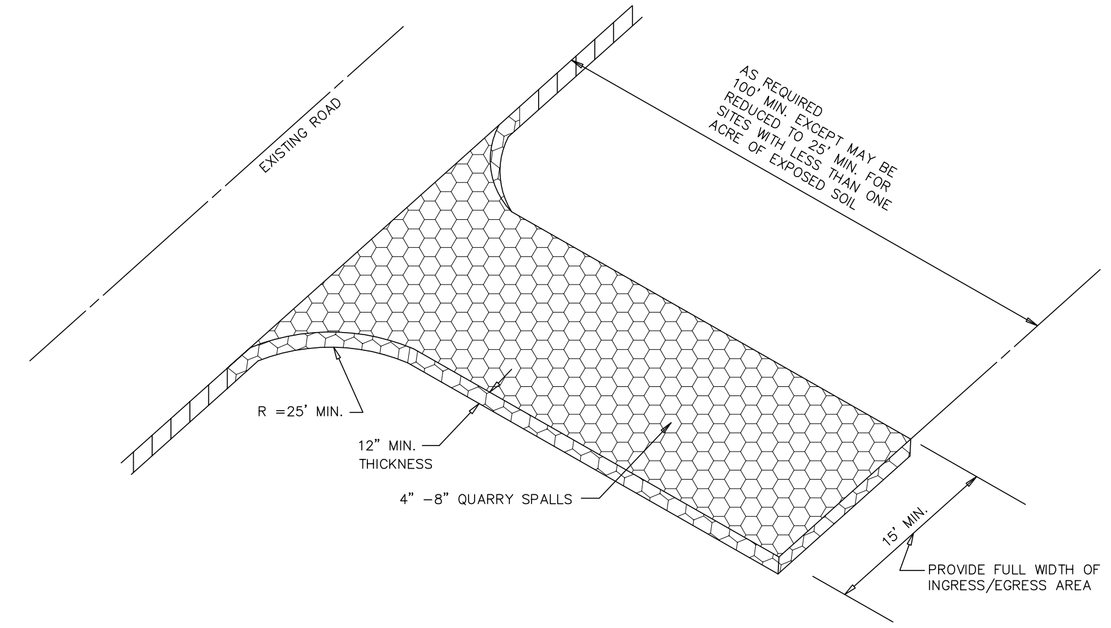

STABILIZED CONSTRUCTION ENTRANCE

NTS

LUIS PONCE
STATE OF WASHINGTON
38378
REGISTERED
PROFESSIONAL ENGINEER
1/6/17

1/05/17 AS-BUILT	DESIGNED BY LP/GKG DRAWN BY LMC CHECKED BY LP	R&E REICHHARDT & EBE ENGINEERING, INC. CONSULTING ENGINEERS PO Box 978 423 Front St., Ste 201 Lynden, Washington 98264 Ph (360) 354-3687 Fax (360) 354-0407	NO. / DATE / REVISION / BY	CITY OF FERNDALE 2095 MAIN STREET FERNDALE, WA 98248	CHURCH ROAD STREET IMPROVEMENTS TEMP. EROSION AND SEDIMENTATION CONTROL PLAN	JOB# / DWG 07037 TESC SCALE H: 1"=20' V: N/A	DATE 1-5-17 SHEET 10 of 64

00616.010 4/17/17 KJ

P:\Projects\07037\Dwg\CD\AS BUILT-CONSTRUCTION\Plan Sheets\A8 07037 TESC-CONST.dwg, 3/17/2017 1:15:45 PM

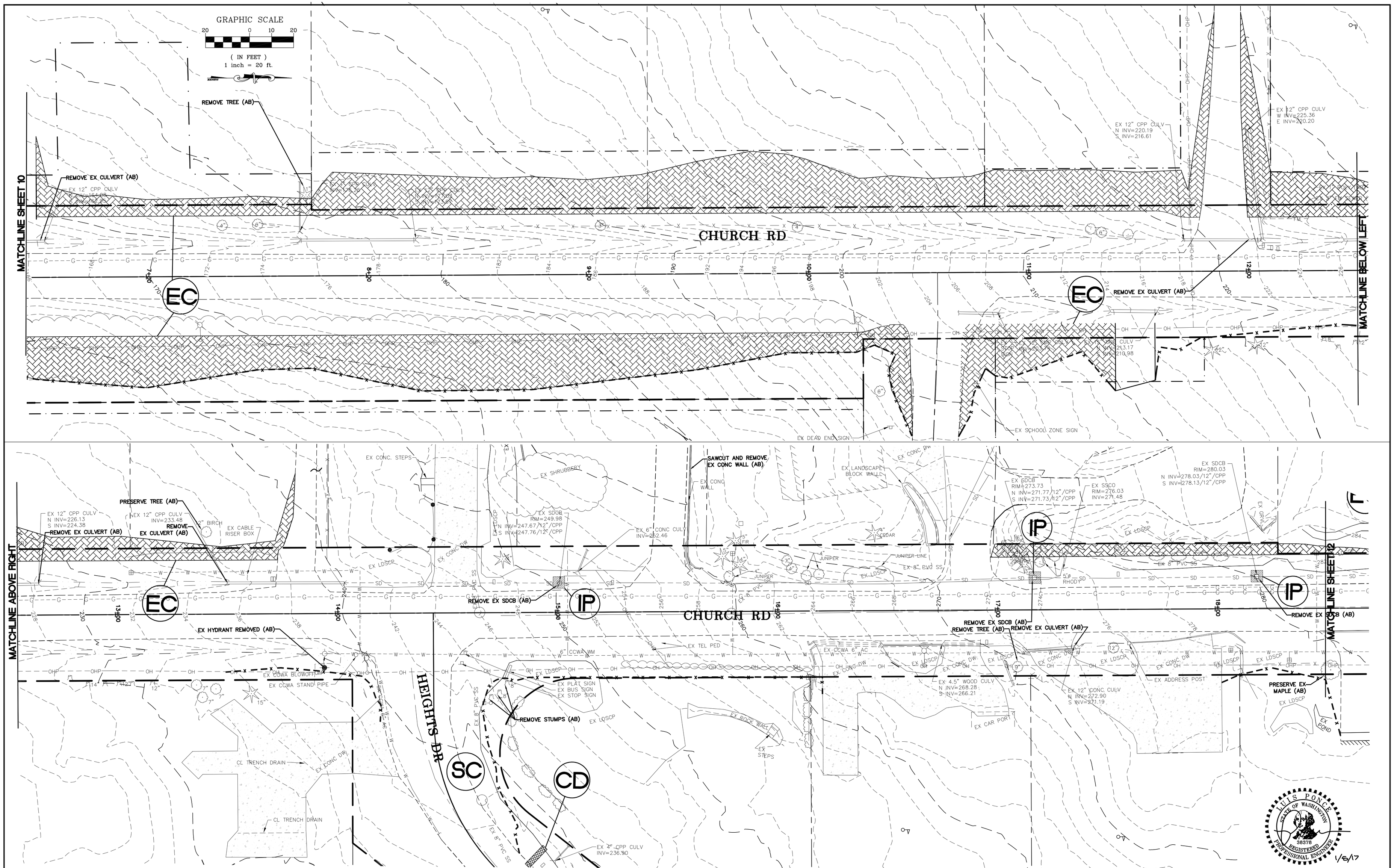

00616.011 4/17/17 KJ

1/05/17 AS-BUILT

DESIGNED BY	LP/GKG
DRAWN BY	LMC
CHECKED BY	LP

R&E

REICHHARDT & EBE
ENGINEERING, INC.
CONSULTING ENGINEERS
PO Box 978 423 Front St., Ste 201 Lynden, Washington 98264
Ph (360) 354-3687 Fax (360) 354-0407

NO.	DATE	REVISION	BY

CITY OF FERNDALE
2095 MAIN STREET
FERNDALE, WA 98248

CHURCH ROAD
STREET IMPROVEMENTS
TEMP. EROSION AND SEDIMENTATION CONTROL PLAN

JOB# / DWG	DATE
07037 TESC	1-5-17
SCALE	SHEET
H: 1"=20' V: N/A	11 of 64

P:\Projects\07037\dwg\CID AS BUILT-CONSTRUCTION\Plan Sheets\AB\07037 TESC-CONST.dwg 3/17/2017 1:16:11 PM

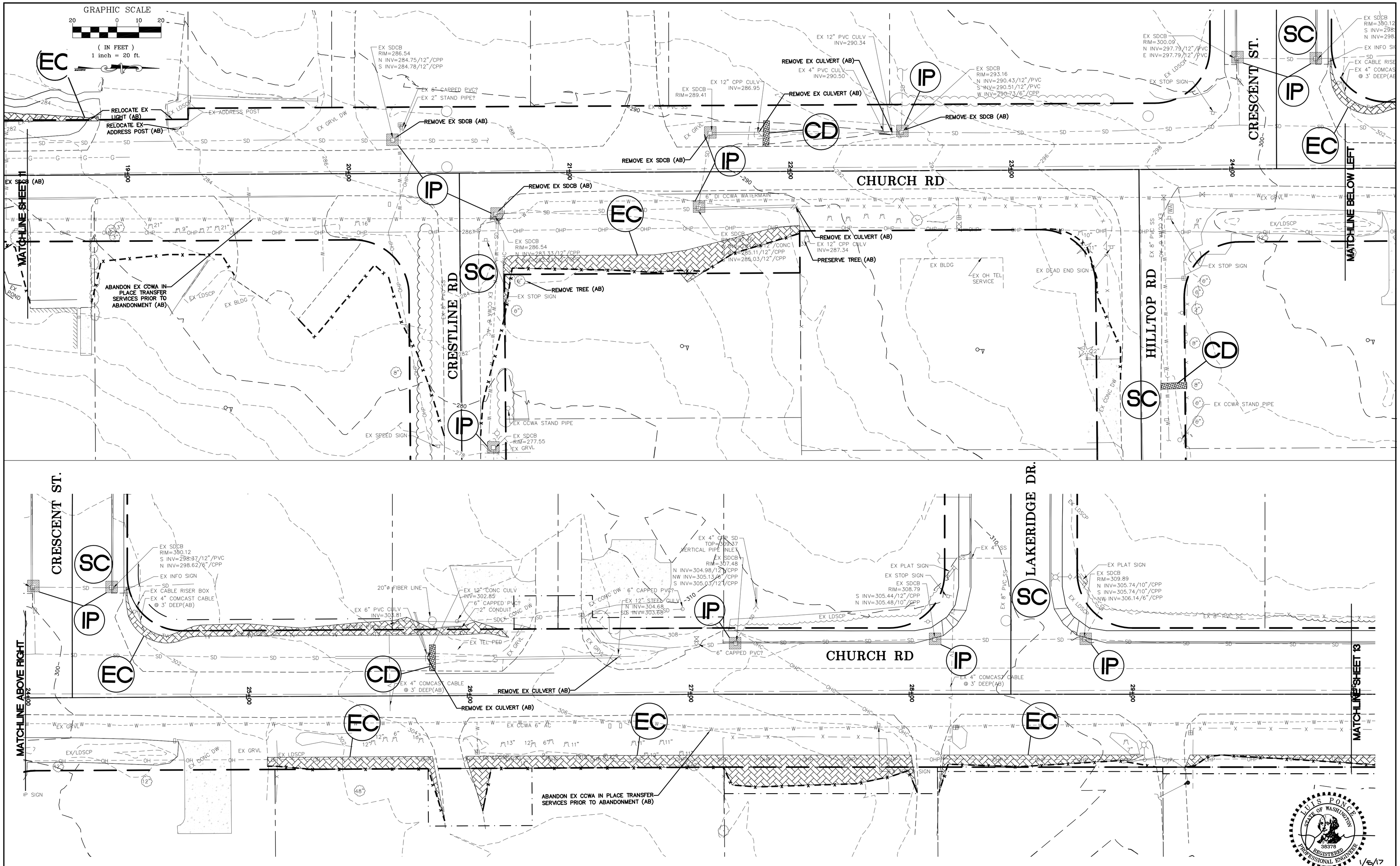

00616.12 4/17/17 KJ

1/05/17 AS-BUILT	DESIGNED BY LP/GKG DRAWN BY LMC CHECKED BY LP	R&E REICHHARDT & EBE ENGINEERING, INC. CONSULTING ENGINEERS PO Box 978 423 Front St., Ste 201 Lynden, Washington 98264 Ph (360) 354-3687 Fax (360) 354-0407	NO. / DATE / REVISION / BY	CITY OF FERNDALE 2095 MAIN STREET FERNDALE, WA 98248	CHURCH ROAD STREET IMPROVEMENTS TEMP. EROSION AND SEDIMENTATION CONTROL PLAN	JOB# / DWG 07037 TESC SCALE H: 1"=20' V: N/A	DATE 1-5-17 SHEET 12 of 64

P:\Projects\07037\dwg\CD AS BUILT-CONSTRUCTION\Plan Sheets\AB 07037 TESC-CONST.dwg 3/17/2017 1:16:34 PM

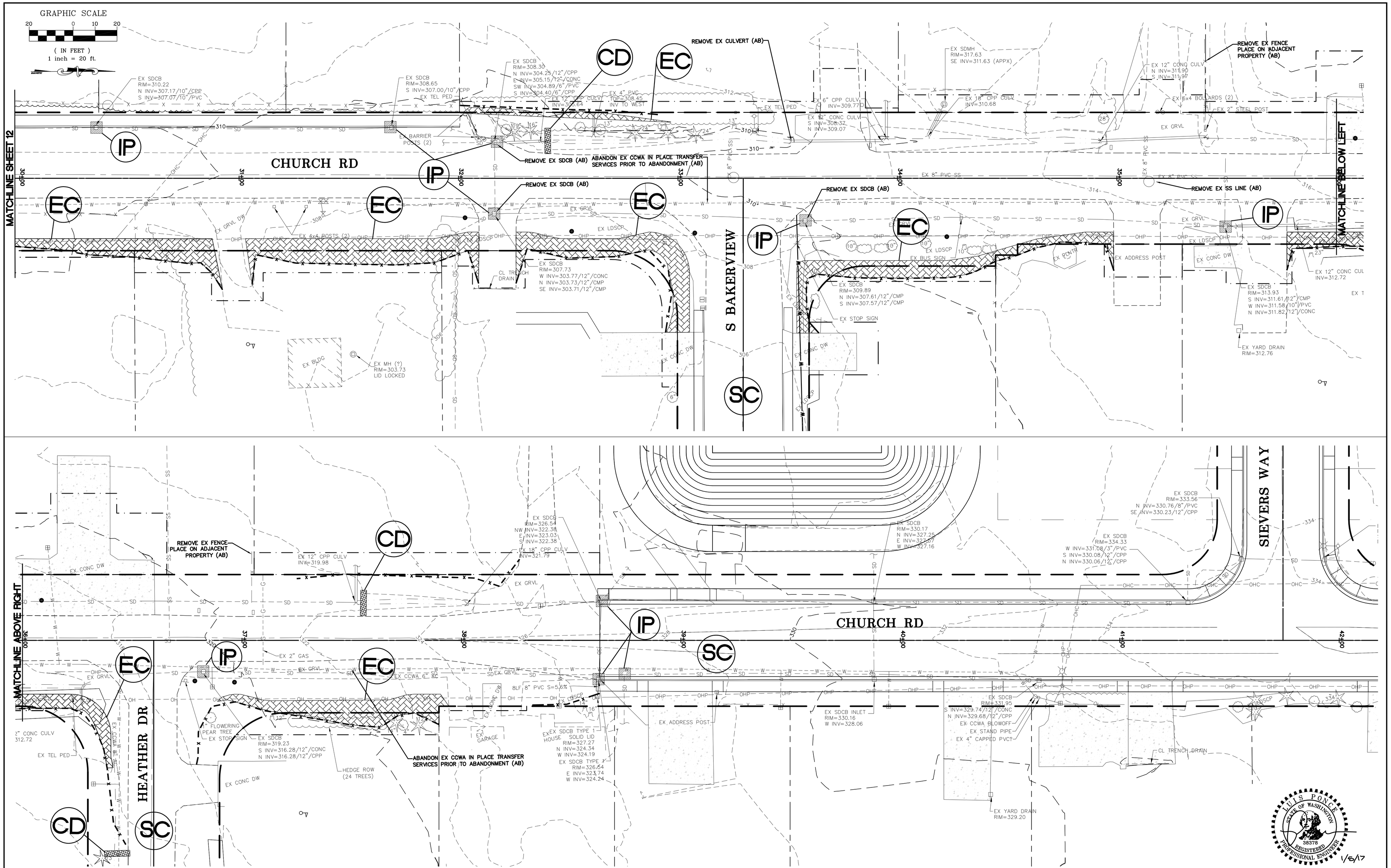

1/05/17 AS-BUILT	DESIGNED BY LP/GKG DRAWN BY LMC CHECKED BY LP	R&E REICHHARDT & EBE ENGINEERING, INC. CONSULTING ENGINEERS PO Box 978 423 Front St., Ste 201 Lynden, Washington 98264 Ph (360) 354-3687 Fax (360) 354-0407	NO.	DATE	REVISION	BY	CITY OF FERNDALE 2095 MAIN STREET FERNDALE, WA 98248

CHURCH ROAD STREET IMPROVEMENTS TEMP. EROSION AND SEDIMENTATION CONTROL PLAN	JOB# / DWG 07037 TESC	DATE 1-5-17
	SCALE H: 1"=20' V: N/A	SHEET 13 of 64

00616.013 4/17/17 KJ

P:\Projects\07037\dwg\CD AS BUILT-CONSTRUCTION\Plan Sheets\AB 07037 TESC-CONST.dwg, 3/17/2017 1:17:01 PM

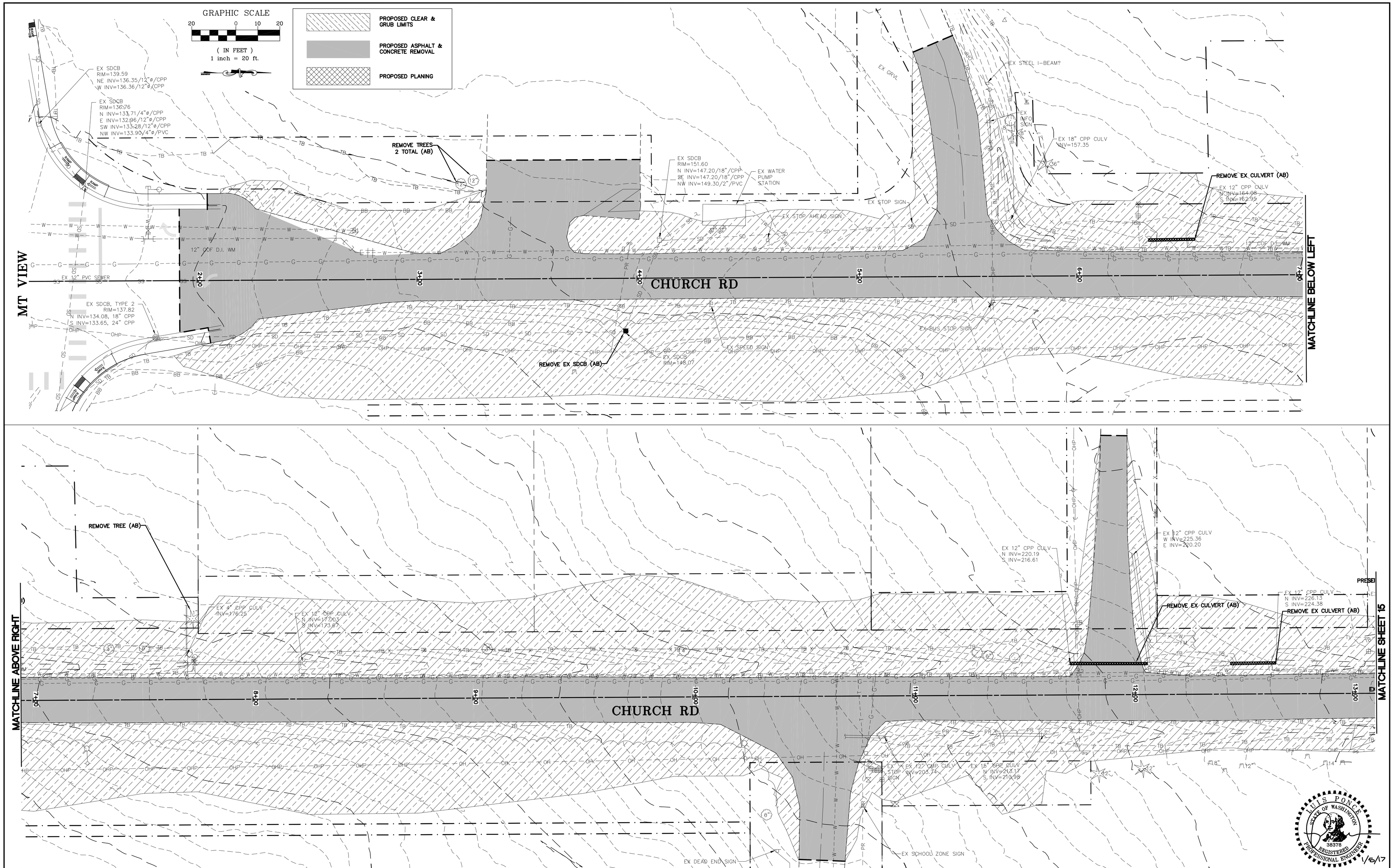

00616.014 4/17/17/KJ

1/05/17 **AS-BUILT**

DESIGNED BY	LP/GKG
DRAWN BY	LMC
CHECKED BY	LP

R&E
REICHHARDT & EBE
ENGINEERING, INC.
CONSULTING ENGINEERS
PO Box 978 423 Front St., Ste 201 Lynden, Washington 98264
Ph (360) 354-3687 Fax (360) 354-0407

NO.	DATE	REVISION	BY

CITY OF FERNDALE
2095 MAIN STREET
FERNDALE, WA 98248

CHURCH ROAD
STREET IMPROVEMENTS
DEMOLITION PLAN

JOB# / DWG	DATE
07037 DEMO	1-5-17
SCALE H: 1"=20' V: N/A	SHEET 14 of 64

P:\Projects\07037\dwg\CD\ AS BUILT-CONSTRUCTION\Plan Sheets\AB 07037 DEMO-CONST.dwg, 3/17/2017 1:19:55 PM

GRAPHIC SCALE
20 0 10 20
(IN FEET)
1 inch = 20 ft.

MATCHLINE SHEET 14

MATCHLINE BELOW LEFT

CHURCH RD

HEIGHTS DR

PRESERVE TREE (AB)

EX 12" CPP CULV INV=233.48

(AB)

EX CABLE RISER BOX

EX CONC. STEPS

EX SHRUBBERY

EX 4" CONC WALL @ LDSCP EDGE

SAWCUT AND REMOVE EX CONC WALL (AB)

EX CONC WALL

±130 LF 8" PVC

EX LANDSCAPE BLOCK WALL

EX SDCB RIM=270.58 E & W INV=267.4±/8" PVC

EX SDCB RIM=280.03 N INV=278.03/12"/CPP S INV=278.13/12"/CPP

EX SDCB RIM=273.73 N INV=271.77/12"/CPP S INV=271.73/12"/CPP

EX SSCO RIM=276.03 INV=271.48

EX SSCO RIM=281.47/ INV=277.47/8"/PVC

RELOCATE EX LIGHT (AB)

EX SDCB RIM=249.98 N INV=247.67/12"/CPP S INV=247.76/12"/CPP

EX 6" CONC CULV INV=252.46

EX SSCO RIM=264.22 INV=259.12/8"PVC

REMOVE EX SDCB (AB)

REMOVE EX CULVERT (AB)

EX HYDRANT REMOVED (AB)

EX SSMH RIM=245.93 N INV=240.53/8"/PVC E INV=240.53/8"/PVC W INV=243.66(DIP)/8"/PVC

EX CCWA BLOWOFF

EX CCWA STAND PIPE

EX PLAT SIGN
EX BUS SIGN
EX STOP SIGN

REMOVE STUMPS (AB)

EX SSMH RIM=259.76 W INV=250.16/8"/PVC NW INV=250.36/8"/PVC S INV=250.07/8"/PVC

EX CCWA 6" AC

EX 4.5" WOOD CULV N INV=268.28 S INV=266.21

EX 12" CONC CULV N INV=272.90 S INV=271.19

EX ADDRESS POST

EX CAR PORT

PRESERVE EX MAPLE (AB)

EX BOND

EX ROCK WALL

EX STEPS

CL TRENCH DRAIN

EX SSMH RIM=238.34 W INV=233.47/8"/PVC E INV=233.29/8"/PVC

13+00 14+00 15+00 16+00 17+00 18+00 19+00

MATCHLINE ABOVE RIGHT

MATCHLINE SHEET 16

CHURCH RD

CRESTLINE RD

HILLTOP RD

CRESCENT

RESTORE/RELOCATE EX LANDSCAPING PRESERVE AND RELOCATE EX LANDSCAPING ROCK (AB)

RELOCATE EX LIGHT (AB)

RELOCATE EX ADDRESS POST (AB)

EX ADDRESS POST

EX 4" PVC SEWER SIDE SERVICE

EX SDCB RIM=286.54 N INV=284.75/12"/CPP S INV=284.78/12"/CPP

EX 6" CAPPED PVC?
EX 2" STAND PIPE?

EX SSMH RIM=289.11 N INV=280.48/8"/PVC E INV=280.48/8"/PVC

EX 4" PVC SEWER SIDE SERVICE

EX 4" PVC (CAPPED)

EX 12" CPP CULV INV=286.95

EX SDCB RIM=289.41

EX 8" SSCO AND END CAP

EX 12" PVC CULV INV=290.34

REMOVE EX CULVERT (AB)

EX 4" PVC CULV INV=290.50

REMOVE EX CULVERT (AB)

EX SDCB RIM=293.16 N INV=290.43/12"/PVC S INV=290.51/12"/PVC W INV=290.73/6"/CPP

REMOVE EX SDCB (AB)

EX SSMH RIM=298.86 E INV=290.25/8"/PVC N INV=290.56/8"/PVC

EX SDCB RIM=300.09 N INV=297.79/12"/PVC E INV=297.79/12"/PVC

EX STOP SIGN

EX SDCB RIM=300.12 S INV=298.37/12"/PVC N INV=298.62/6"/CPP

EX INFO SIGN

EX CABLE RISER BOX

EX 4" COMCAST CABLE @ 3' DEEP(AB)

REMOVE EX SDCB (AB)

EXISTING CB REMOVED (AB)

ABANDON EX CCWA IN PLACE TRANSFER SERVICES PRIOR TO ABANDONMENT (AB)

EX SSMH RIM=287.11 ADJUST TO FG E INV=279.17/8"/PVC W INV=279.27/8"/PVC

REMOVE EX SDCB (AB)

6" DI CCWA WATERMAIN

EX SDCB RIM=287.46 W INV=284.86/12"/CONC N INV=285.11/12"/CPP S INV=286.03/12"/CPP

REMOVE EX CULVERT (AB)

EX 12" CPP CULV INV=287.34

PRESERVE TREE (AB)

REMOVE TREE (AB)

EX STOP SIGN

EX BLDG

EX OH TEL SERVICE

EX DEAD END SIGN

10" CCF D.I. WM (APPROX LOC)

EX 8" PVC SS

EX STOP SIGN

19+00 20+00 21+00 22+00 23+00 24+00 25+00

PROPOSED CLEAR & GRUB LIMITS

PROPOSED ASPHALT & CONCRETE REMOVAL

PROPOSED PLANING

LUIS PONCE
STATE OF WASHINGTON
38378
REGISTERED PROFESSIONAL ENGINEER
1/6/17

00616.015 4/17/17 KJ

1/05/17 AS-BUILT

DESIGNED BY LP/GKG
DRAWN BY LMC
CHECKED BY LP

R&E
REICHHARDT & EBE
ENGINEERING, INC.
CONSULTING ENGINEERS
PO Box 978 423 Front St., Ste 201 Lynden, Washington 98264
Ph (360) 354-3687 Fax (360) 354-0407

NO.	DATE	REVISION	BY

CITY OF FERNDALE
2095 MAIN STREET
FERNDALE, WA 98248

CHURCH ROAD
STREET IMPROVEMENTS
DEMOLITION PLAN

JOB# / DWG 07037 DEMO
SCALE H: 1"=20' V: N/A
DATE 1-5-17
SHEET 15 of 64

P:\Projects\07037\dwg\CD AS BUILT-CONSTRUCTION\Plan Sheets\AB 07037 DEMO-CONST.dwg, 3/17/2017 1:19:31 PM

GRAPHIC SCALE

20 0 10 20

(IN FEET)
1 inch = 20 ft.

MATCHLINE SHEET 15

MATCHLINE BELOW LEFT

CHURCH RD

LAKERIDGE DR

EX SSMH
RIM=309.90
S INV=302.40/8"/PVC
N INV=302.44/8"/PVC
W INV=302.46/8"/PVC

EX 4" CPP SD
TOP=309.37
VERTICAL PIPE INLET

EX SDCB
RIM=307.48
N INV=304.98/12"/CPP
NW INV=305.13/12"/CPP
S INV=305.03/12"/CPP

EX SDCB
RIM=308.79
S INV=305.44/12"/CPP
N INV=305.48/10"/CPP

EX SDCB
RIM=309.89
N INV=305.74/10"/CPP
S INV=305.74/10"/CPP
NW INV=306.14/6"/CPP

EX SDCB
RIM=310.22
N INV=307.17/10"/CPP
S INV=307.07/10"/PVC

20"ø FIBER LINE

EX 12" CONC CULV
INV=302.85

6" CAPPED PVC?

2" CONDUIT

EX 6" PVC CULV
INV=302.81

EX 12" STEEL CULV
N INV=304.68
SS INV=303.68

6" CAPPED PVC?

EX 4" COMCAST CABLE
@ 3' DEEP(AB)

REMOVE EX CULVERT (AB)

REMOVE EX CULVERT (AB)

ABANDON EX CCWA IN PLACE TRANSFER
SERVICES PRIOR TO ABANDONMENT (AB)

EX COMCAST CABLE
@ 3' DEEP(AB)

12" COF D.I. WM

25+00 26+00 27+00 28+00 29+00 30+00 31+00

MATCHLINE ABOVE RIGHT

MATCHLINE SHEET 17

CHURCH RD

S BAKERVIEW

HEATHER DR

EX SDCB
RIM=308.65
S INV=307.00/10"/CPP

EX SDCB
RIM=308.30
N INV=304.25/12"/CPP
E INV=305.15/12"/CONC
SW INV=304.89/6"/PVC
S INV=304.40/6"/CPP

EX 12" CPP CULV
INV=305.64

EX 4" PVC
TOP=308.45
INV TO WEST INV=301.90/8"/PVC

EX SSCO
RIM=309.40

REMOVE EX CULVERT (AB)

EX 6" CPP CULV
INV=309.77

EX 12" CONC CULV
S INV=308.37
N INV=309.07

EX SDMH
RIM=317.63
SE INV=311.63 (APPX)

EX 12" CONC CULV
N INV=311.90
S INV=311.97

EX 18" CPP CULV
INV=310.68

EX 6x4 BOLLARDS (2)

EX 2" STEEL POST

REMOVE EX FENCE,
PLACE ON ADJACENT
PROPERTY (AB)

EX BARRIER
POSTS (2)

REMOVE EX SDCB (AB)

ABANDON EX CCWA IN
PLACE TRANSFER
SERVICES PRIOR TO
ABANDONMENT (AB)

EX SSMH
RIM=310.45
E INV=299.55/8"/PVC
W INV=299.68/8"/PVC
N INV=299.68/8"/PVC

REMOVE EX SDCB (AB)

EX SSMH
RIM=314.98
S INV=305.83/8"/PVC
N INV=305.88/8"/PVC
W INV=305.88/8"/PVC

REMOVE EX SS LINE (AB)

REMOVE EX SDCB (AB)

EX BARRIER
POSTS (2)

EX SDCB
RIM=307.73
W INV=303.77/12"/CONC
N INV=303.73/12"/CMP
SE INV=303.71/12"/CMP

CL TRENCH
DRAIN

EX SDCB
RIM=309.89
N INV=307.61/12"/CMP
S INV=307.57/12"/CMP

REMOVE STUMP (AB)

EX STOP SIGN

EX BUS SIGN

EX ADDRESS POST

EX YARD DRAIN
RIM=312.76

EX SDCB
RIM=313.93
S INV=311.61/12"/CMP
W INV=311.58/10"/PVC
N INV=311.82/12"/CONC

REMOVE STUMP (AB)

EX 12" CONC CULV
INV=312.72

EX TEL PED

1" FLOWERING
PEAR TREE

EX STOP SIGN

REMOVE TO GARAGE (AB)

PROPOSED CLEAR &
GRUB LIMITS

PROPOSED ASPHALT &
CONCRETE REMOVAL

PROPOSED PLANING

LUIS PONCE
STATE OF WASHINGTON
38378
REGISTERED
PROFESSIONAL ENGINEER
1/5/17

00616.016 4/17/17 KJ

DESIGNED BY LP/GKG DRAWN BY LMC CHECKED BY LP	R&E REICHHARDT & EBE ENGINEERING, INC. CONSULTING ENGINEERS PO Box 978 423 Front St., Ste 201 Lynden, Washington 98264 Ph (360) 354-3687 Fax (360) 354-0407	NO. / DATE / REVISION / BY	CITY OF FERNDALE 2095 MAIN STREET FERNDALE, WA 98248	CHURCH ROAD STREET IMPROVEMENTS DEMOLITION PLAN	JOB# / DWG 07037 DEMO SCALE H:1"=20' V:N/A DATE 1-5-17 SHEET 16 of 64

P:\Projects\07037\dwg\CD AS BUILT-CONSTRUCTION\Plan Sheets\AB 07037 DEMO-CONST.dwg, 3/17/2017 1:19:55 PM

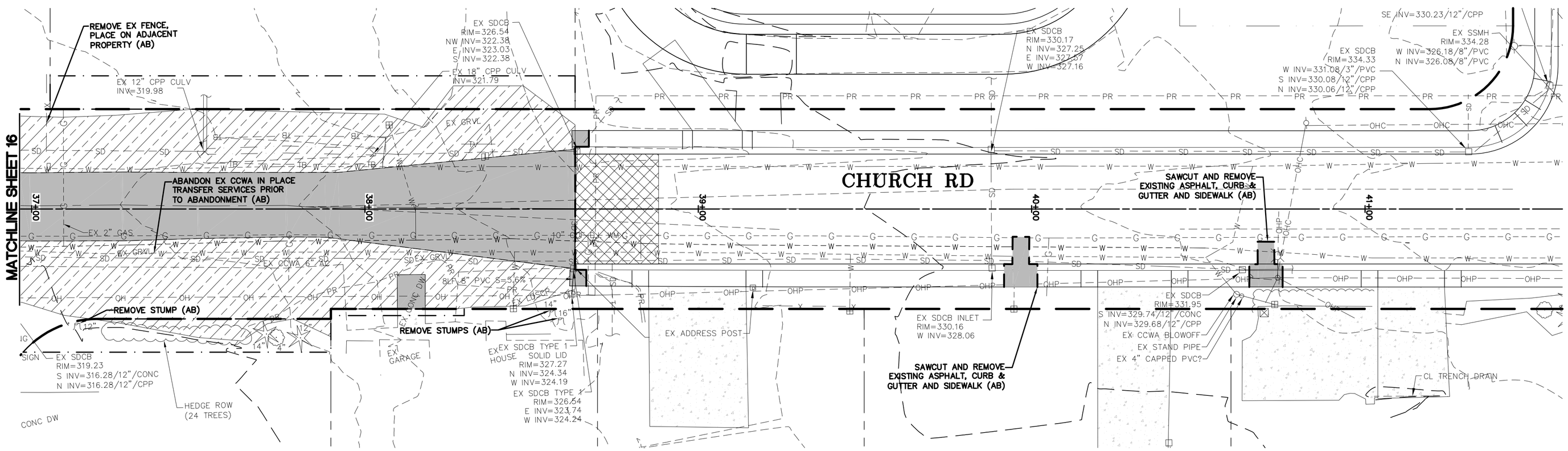

PROPOSED CLEAR & GRUB LIMITS

PROPOSED ASPHALT & CONCRETE REMOVAL

PROPOSED PLANING

GRAPHIC SCALE

20 0 10 20

(IN FEET)
1 inch = 20 ft.

LUIS PONCE
STATE OF WASHINGTON
38378
REGISTERED PROFESSIONAL ENGINEER
1/5/17

1/05/17 AS-BUILT

DESIGNED BY	LP/GKG
DRAWN BY	LMC
CHECKED BY	LP

REICHHARDT & EBE
ENGINEERING, INC.
CONSULTING ENGINEERS
PO Box 978 423 Front St., Ste 201 Lynden, Washington 98264
Ph (360) 354-3687 Fax (360) 354-0407

NO.	DATE	REVISION	BY

CITY OF FERNDALE
2095 MAIN STREET
FERNDALE, WA 98248

CHURCH ROAD
STREET IMPROVEMENTS
DEMOLITION PLAN

JOB# / DWG	07037 DEMO	DATE	1-5-17
SCALE	H: 1"=20' V: N/A	SHEET	17 of 64

00616.017 4/17/17 KJ

P:\Projects\07037\dwg\CD AS BUILT-CONSTRUCTION\Plan Sheets\AB 07037 DEMO-CONST.dwg, 3/17/2017 1:20:37 PM

GRAPHIC SCALE

20 0 10 20

(IN FEET)
1 inch = 20 ft.

STA: 5+41.00, 95.00' L
INSTALL:
12" SS STUB, CAP & MARK
INV=157.56'

82 LF 12" CPSSP
S=0.0228 FT/FT (AB)

12" CPSSP (AB)
164.149 INV
EX STEEL I-BEAM?

STA 5+65.28, 30.50'L
INSTALL: SDCB TYPE 1, D6
RIM=161.75
NE INV (OUT)=160.14/8" CPSSP

STA 5+82.25, 33.60'L
INSTALL: TYPE 1, D67
RIM=161.85
NE INV (IN)=159.63/12" CPSSP
W INV (OUT)=162.29/12" CPSSP

EX 18" CPP CULV
INV=157.35

STA: 6+36.00,
INSTALL: SS STUB
TOP OF PIPE = 156.62 (AB)

83 LF 6" PVC
S=0.010 FT/FT

95 LF 12" PVC
S=0.0097 FT/FT

16 LF 12" CPSSP
S=0.0238 FT/FT

25 LF 8" CPSSP
S=0.0056 FT/FT

32 LF 12" DI
S=0.0323 FT/FT

STA 5+89.80, 17.17'L
INSTALL: SDCB TYPE 1, D8
RIM=160.92
SW INV (IN)=160.00/8" CPSSP
E INV (OUT)=159.83/12" DI
SW INV (OUT)=160.01/12" CPSSP

NORWAY DR

EX SDCB
RIM=139.59
NE INV=136.35/12"ø/CPP
W INV=136.36/12"ø/CPP

EX SDCB
RIM=136.76
N INV=133.71/4"ø/CPP
E INV=132.96/12"ø/CPP
SW INV=133.28/12"ø/CPP
NW INV=133.90/4"ø/PVC

STA: 2+00.00, 0.00'
INSTALL:
12"x12" SS COUPLER
INV=135.09'

STA 2+83.90, 20.85'L
INSTALL: SDCB TYPE 1, D2
RIM=146.35
E INV (OUT)=143.29/12" DI

REMOVE TREES
2 TOTAL (AB)

STA 4+08.24, 30.57'L
INSTALL: SDCB TYPE 1, D4
RIM=152.09
E INV (OUT)=150.28/12" CPSSP

10 LF 12" CPSSP
S=0.0078 FT/FT

STA 4+08.68, 18.40'L
INSTALL: SDCB TYPE 1, D5
RIM=152.33
W INV (IN)=150.20/12" CPSSP
E INV (OUT)=150.00/12" DI

EX SDCB
RIM=151.60
N INV=147.20/18"/CPP
SE INV=147.20/18"/CPP
NW INV=149.30/2"/PVC

EX WATER
PUMP
STATION

REMOVE EX SDCB (AB)

REDUNDANT LINE FROM BOOSTER STATION ON
CHURCH RD TO SERVICE WEST OF CHURCH ON MAIN

12" COF D.I. WM

EX 12" PVC SS

EX 12" PVC SEWER

EX SDCB, TYPE 2
RIM=137.82
N INV=134.08, 18" CPP
S INV=133.65, 24" CPP

40 LF 12" DI
S=0.0196 FT/FT

35 LF 12" DI
S=0.0401 FT/FT

CHURCH RD

MT VIEW

MATCHLINE SHEET 19

STA 2+83.83, 21.99'R
INSTALL: TYPE 2-48", D1
RIM=146.42
W INV (IN)=142.51/12" DI
N INV (IN)=141.28/18" CPSSP

REMOVE EX SDCB (AB)

EX SDCB
RIM=148.07

EX SDCB
RIM=134.14
N INV=131.16/12"ø/STL

EX SDCB, TYPE 2
RIM=134.04
NW INV=129.66/24"ø/CPP
E INV=129.50/24"ø/CPP
W INV=130.62/12"ø/CPP
S INV=131.17/12"ø/STL

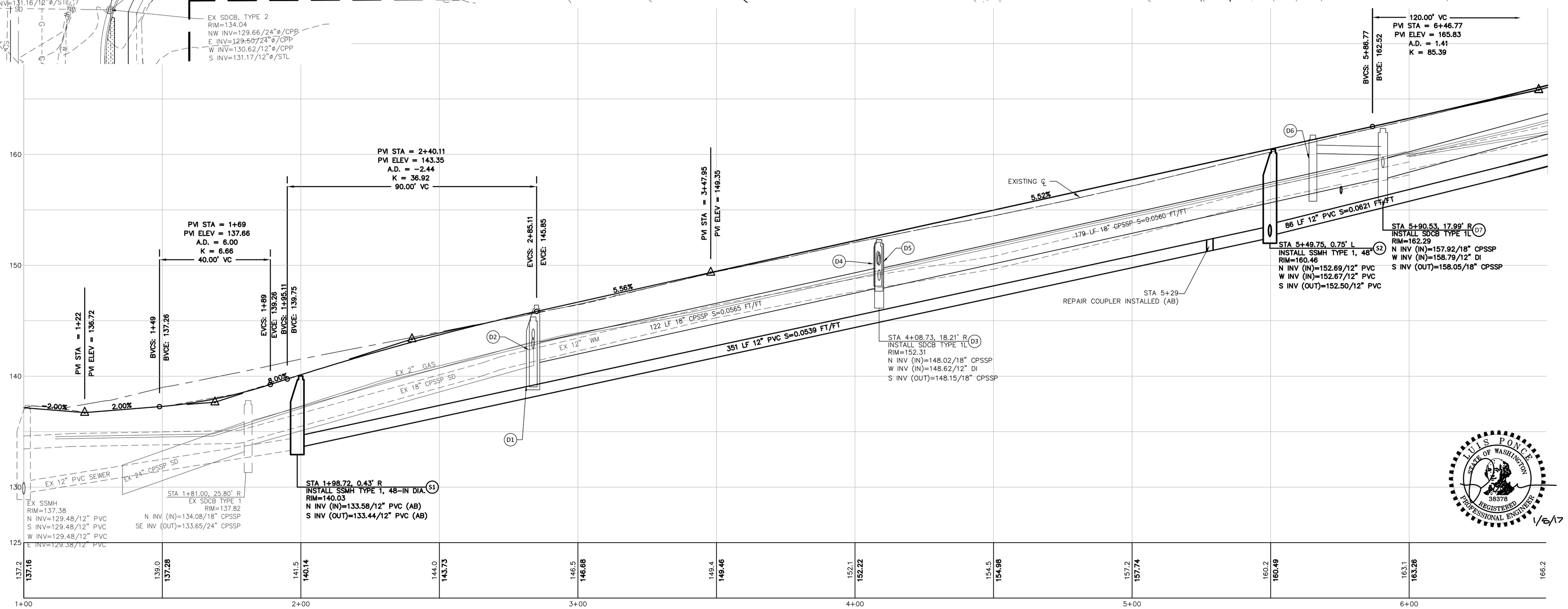

LUIS PONCE
STATE OF WASHINGTON
38378
REGISTERED
PROFESSIONAL ENGINEER
1/6/17

00616.018 4/17/17 KJ

1/05/17 AS-BUILT

DESIGNED BY	LP/GKG
DRAWN BY	LMC
CHECKED BY	LP

R&E
REICHHARDT & EBE
ENGINEERING, INC.
CONSULTING ENGINEERS
PO Box 978 423 Front St., Ste 201 Lynden, Washington 98264
Ph (360) 354-3687 Fax (360) 354-0407

NO.	DATE	REVISION	BY

CITY OF FERNDALE
2095 MAIN STREET
FERNDALE, WA 98248

CHURCH ROAD
STREET IMPROVEMENTS - SEWER
1+00 TO 6+50

JOB# / DWG		DATE
07037	PLANPRO	1-5-17
SCALE		SHEET
H: 1"=20'	V: 1"=5'	18 of 64

P:\Projects\07037\Dwg\CD AS BUILT-CONSTRUCTION\Plan Sheets\AB 07037 SEWER PLANPRO-CONST.dwg 3/17/2017 12:24 PM

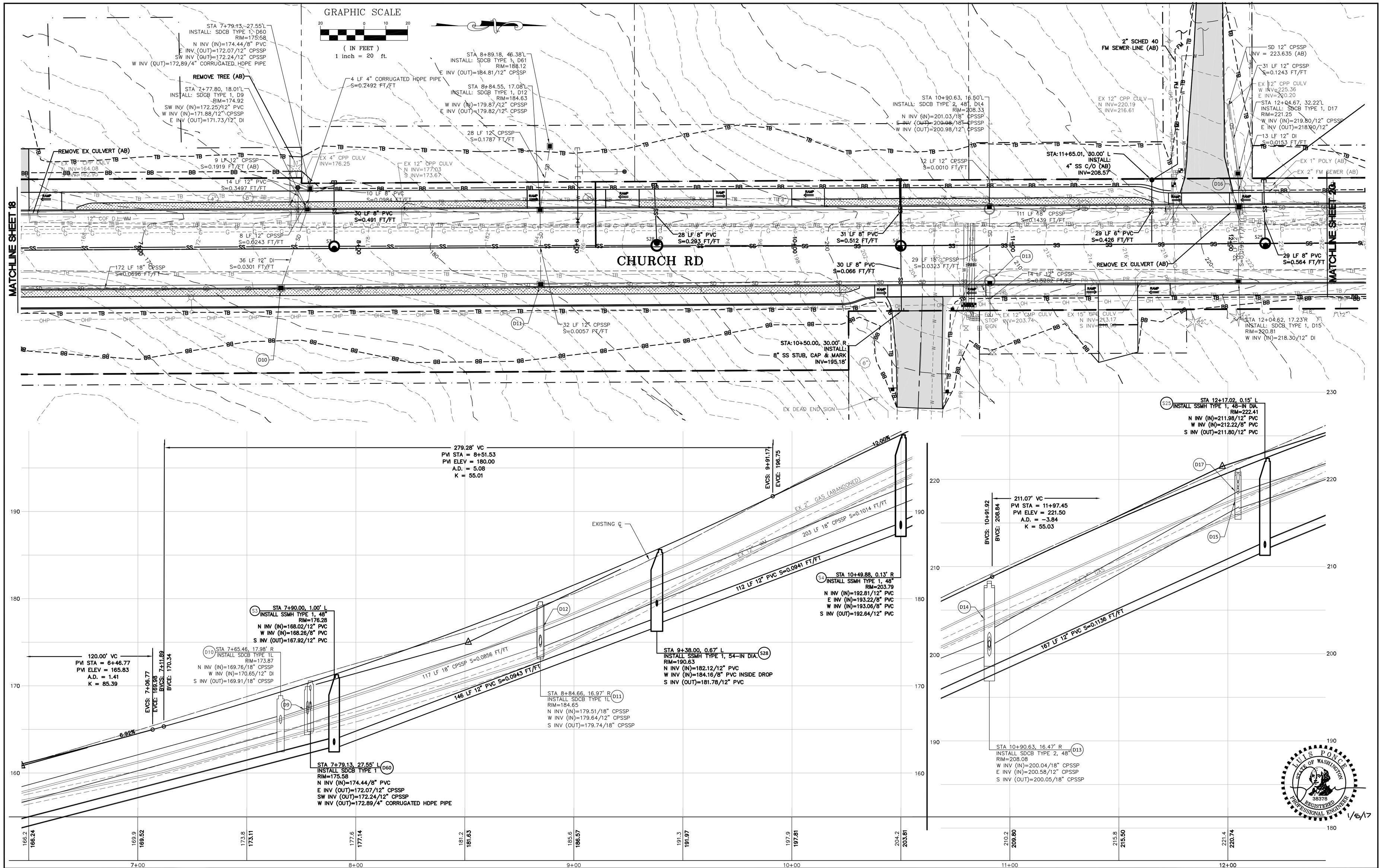

00616.019 4/17/17 KJ

1/05/17 AS-BUILT

DESIGNED BY	LP/GKG
DRAWN BY	LMC
CHECKED BY	LP

R&E
REICHHARDT & EBE
ENGINEERING, INC.
CONSULTING ENGINEERS
PO Box 978 423 Front St., Ste 201 Lynden, Washington 98264
Ph (360) 354-3687 Fax (360) 354-0407

NO.	DATE	REVISION	BY

CITY OF FERNDALE
2095 MAIN STREET
FERNDALE, WA 98248

CHURCH ROAD
STREET IMPROVEMENTS - SEWER
6+50 TO 12+00

JOB# / DWG		DATE
07037	PLANPRO	1/5/17
SCALE		SHEET
H: 1"=20'	V: 1"=5'	19 of 64

P:\Projects\07037\dwg\CD AS BUILT-CONSTRUCTION\Plan Sheets\AB 07037 SEWER PLAN\PRO-CONST.dwg, 1/17/2017 1:23:21 PM

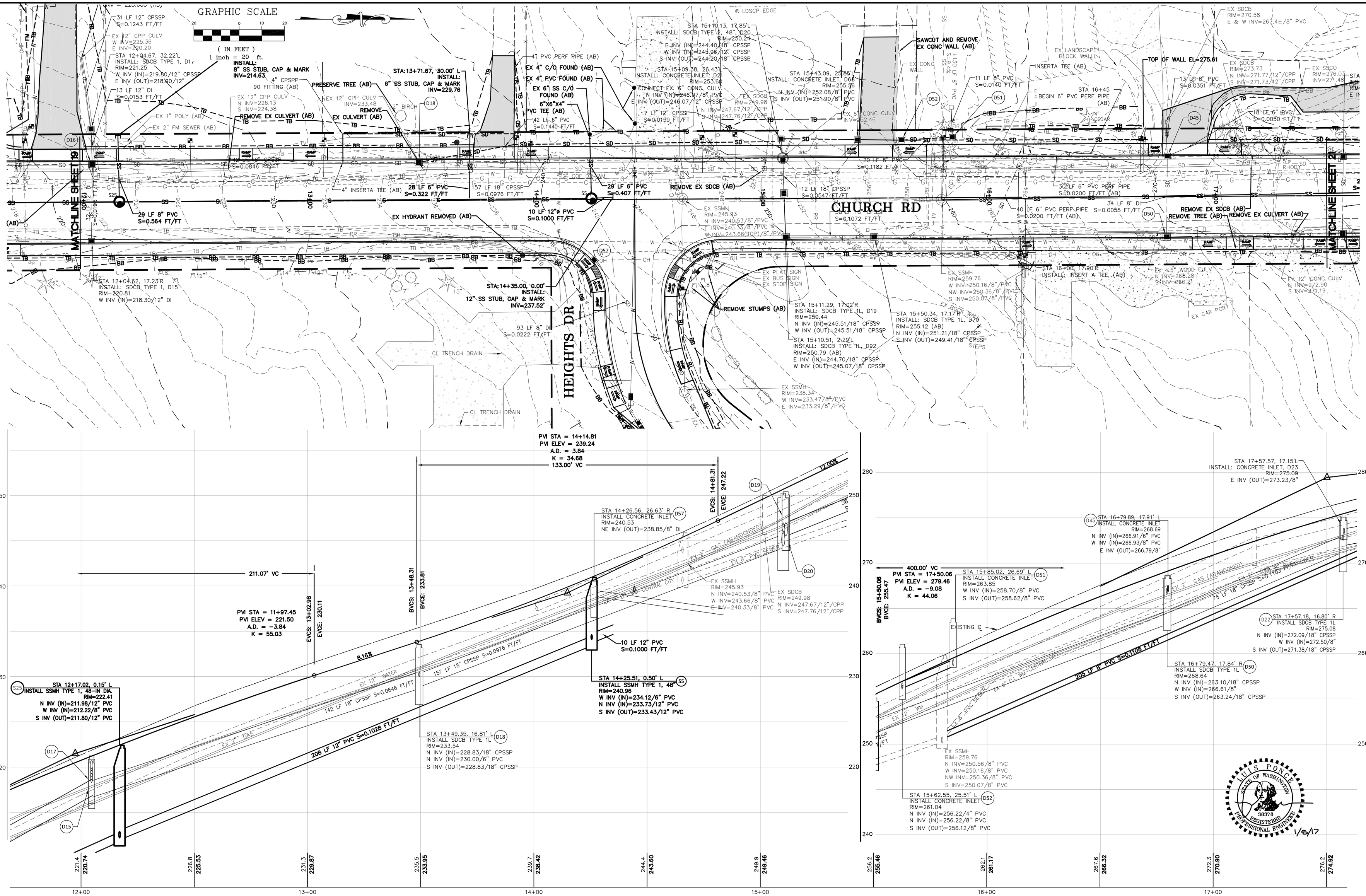

00616.020 4/17/17 KJ

1/05/17 AS-BUILT	DESIGNED BY LP/GKG DRAWN BY LMC CHECKED BY LP	R&E REICHHARDT & EBE ENGINEERING, INC. CONSULTING ENGINEERS PO Box 978 423 Front St., Ste 201 Lynden, Washington 98264 Ph (360) 354-3687 Fax (360) 354-0407	NO. / DATE / REVISION / BY	CITY OF FERNDALE 2095 MAIN STREET FERNDALE, WA 98248	CHURCH ROAD STREET IMPROVEMENTS - SEWER 12+00 TO 17+50

JOB# / DWG	DATE
07037 PLANPRO	1-5-17
SCALE H: 1"=20' V: 1"=5'	SHEET 20 of 64

P:\Projects\07037\dwg\CD AS BUILT-CONSTRUCTION\Plan Sheets\AB 07037 SEWER PLAN\PRO-CONST.dwg, 3/17/2017 1:24:06 PM

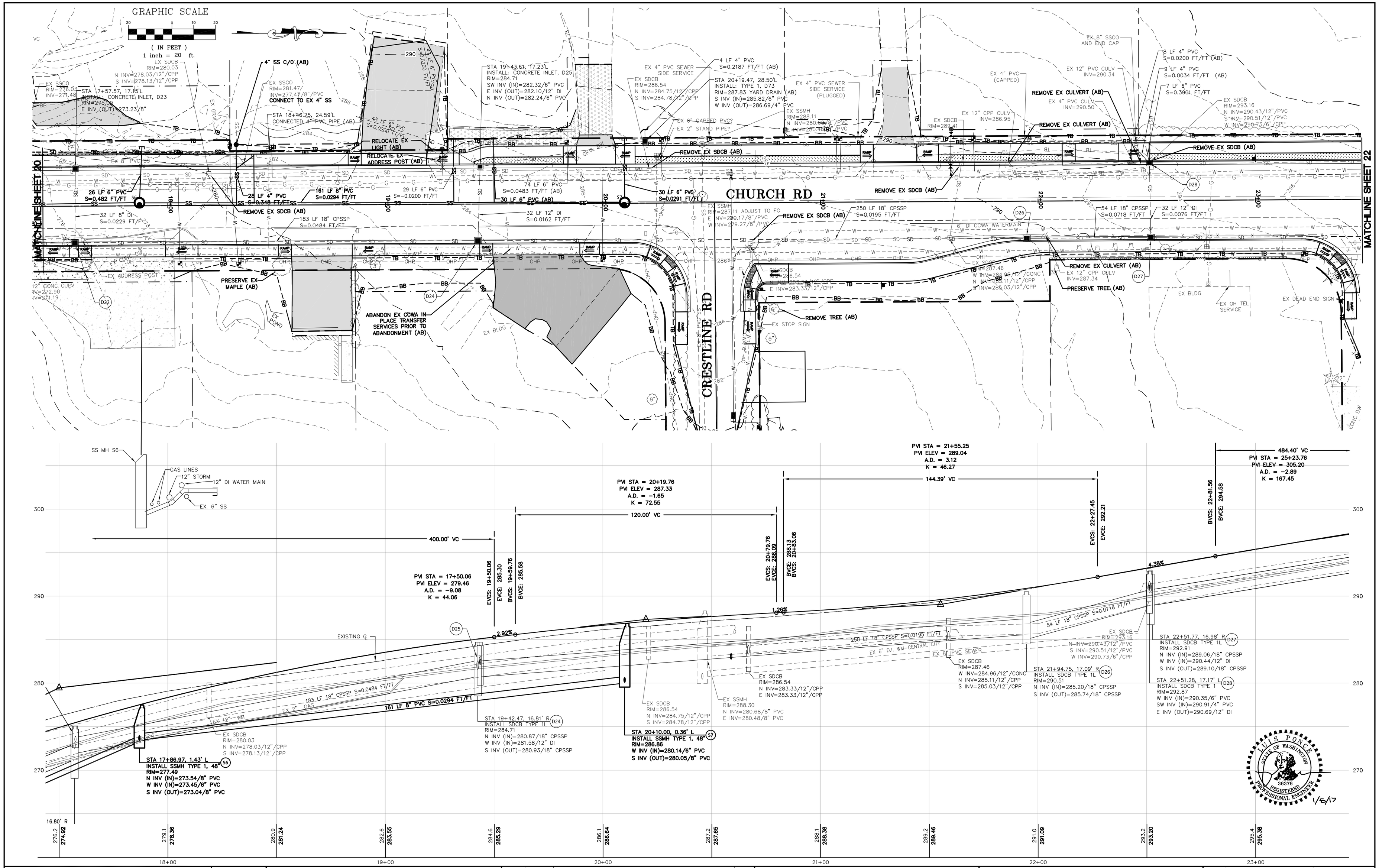

00616.021 4/17/17 KJ

1/05/17 **AS-BUILT**

DESIGNED BY	LP/GKG
DRAWN BY	LMC
CHECKED BY	LP

REICHHARDT & EBE
ENGINEERING, INC.
CONSULTING ENGINEERS
PO Box 978 423 Front St., Ste 201 Lynden, Washington 98264
Ph (360) 354-3687 Fax (360) 354-0407

NO.	DATE	REVISION	BY

CITY OF FERNDALE
2095 MAIN STREET
FERNDALE, WA 98248

CHURCH ROAD
STREET IMPROVEMENTS - SEWER
17+50 TO 23+50

JOB# / DWG	DATE
07037 PLANPRO	1-5-17
SCALE H: 1"=20' V: 1"=5'	SHEET 21 of 64

P:\Projects\07037\dwg\CD AS BUILT-CONSTRUCTION\Plan Sheets\AB 07037 SEWER PLANPRO-CONST.dwg, 3/21/2017 9:11:09 AM

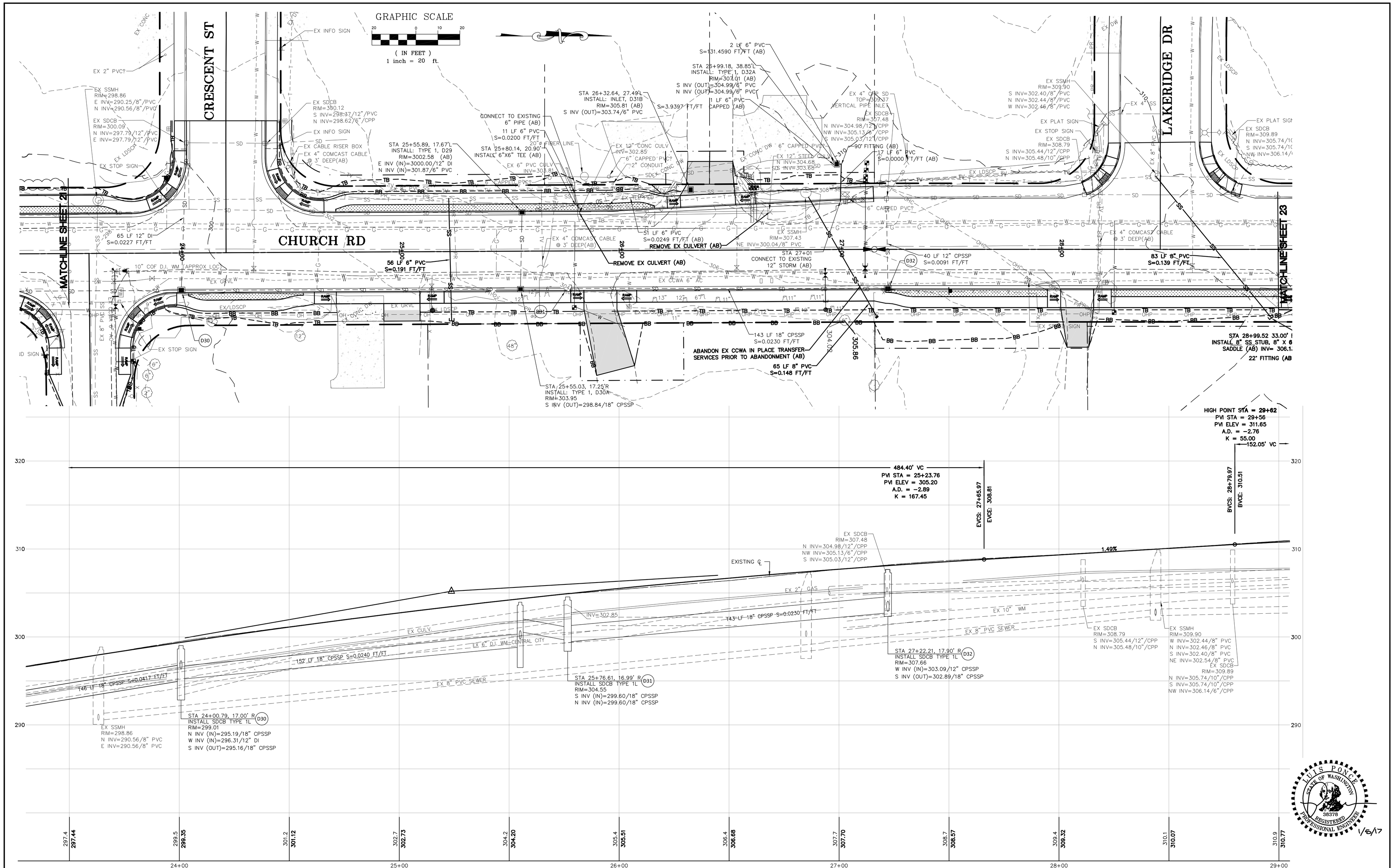

00616.022 4/17/17 KJ

1/05/17 **AS-BUILT**

DESIGNED BY	LP/GKG
DRAWN BY	LMC
CHECKED BY	LP

REICHHARDT & EBE ENGINEERING, INC.
CONSULTING ENGINEERS
PO Box 978 423 Front St., Ste 201 Lynden, Washington 98264
Ph (360) 354-3687 Fax (360) 354-0407

NO.	DATE	REVISION	BY

CITY OF FERNDALE
2095 MAIN STREET
FERNDALE, WA 98248

CHURCH ROAD
STREET IMPROVEMENTS - SEWER
23+50 TO 29+00

JOB# / DWG		DATE
07037	PLANPRO	1-5-17
SCALE		SHEET
H: 1"=20'	V: 1"=5'	22 of 64

P:\Projects\07037\dwg\CD AS BUILT-CONSTRUCTION\Plan Sheets\AB 07037 SEWER PLAN\PRO-CONST.dwg, 1/17/2017 1:25:36 PM

GRAPHIC SCALE

20 0 10 20

(IN FEET)
1 inch = 20 ft.

MATCHLINE SHEET 22

MATCHLINE SHEET 24

CHURCH RD

S BAKERVIEW PK

EX SSMH
RIM=310.93
E INV=303.24/8" PVC (AB)
S INV=303.43/8" PVC
W INV=303.60/8" PVC

STA 32+62.62, 28.65'L
INSTALL: CONCRETE INLET, D43
RIM=310.04 (AB)
S INV (OUT)=308.70/6" PVC
N INV (OUT)=308.75/6" PVC
W INV (OUT)=308.75/4" PVC

STA 33+52.37, 28.01'L
INSTALL: CONCRETE INLET, D44
RIM=311.44 (AB)
S INV (IN)=309.87/6" PVC
W INV (OUT)=309.87/6" PVC

STA 33+92.31, 27.02'L
INSTALL: CONCRETE INLET, D63
RIM=312.12
W INV (IN)=311.2±/6" CPP
(FIELD VERIFY)
N INV (OUT)=311.00/6" PVC

CONNECT EX 18" PIPE
ADJUST SLOPE TO:
S=0.1398 FT/FT

4" PVC
CONNECT TO EXISTING DRAIN (AB)

CONNECT TO
EX. 4" PVC PIPE

REMOVE EX CULVERT (AB)

14 LF 8" PVC
S=0.010 FT/FT
EXTEND EX. 8"
SSCO TO ROW

4" PVC
CONNECT TO
EXISTING DRAIN (AB)

23 LF 6" PVC
S=0.0278 FT/FT
CONNECT TO EX.
6" CPP PIPE

79 LF 18" CPSSP
S=0.0284 FT/FT

STA 34+65.01, 25.74'L
INSTALL: SDCB TYPE 1L, D42
RIM=313.73
S INV (IN)=309.33/18" CPSSP
E INV (OUT)=309.28/18" CPSSP

88 LF 6" PVC
S=0.0128 FT/FT

EX SSCO
RIM=309.40
INV=301.90/8" PVC

EX TEL PED

EX BARRIER
POSTS (2)

91 LF 6" PVC
S=0.0175 FT/FT

12" COF D.I. WM

66 LF 8" PVC
S=0.149 FT/FT

REMOVE EX SDCB (AB)
151 LF 18" CPSSP
S=0.0142 FT/FT

ABANDON EX CCWA IN PLACE TRANSFER
SERVICES PRIOR TO ABANDONMENT (AB)

REMOVE EX SDCB (AB)

EX SSMH
RIM=310.45
E INV=299.55/8"/PVC
W INV=299.68/8"/PVC
N INV=299.68/8"/PVC

REMOVE EX SDCB (AB)

6 LF 18" CPSSP
S=0.0227 FT/FT

32 LF 18" CPSSP
S=0.0179 FT/FT

EX 8" PVC SS

EX GRVL

EX LDSCP

EX PLUS SIGN

EX BENTR

STA 28+99.52 33.00' R
8" SS STUB, 8" X 6"
DLE (AB) INV= 306.13

45° FITTING (AB)

C/O (AB)

6"X4" REDUCER (AB)

EX 4" TO THE
HOUSE NOT
CONNECTED (AB)

22° FITTING (AB)

12 LF 18" CPSSP
S=0.1658 FT/FT

CL TRENCH
DRAIN

EX 18" CMP

EX BLDG

EX WA TANK

PWR
SERV

STA 33+49.06, 19.31'R
INSTALL: SDCB TYPE 1L, D94
RIM=310.59
N INV (IN)=306.90/18" CPSSP
S INV (OUT)=306.85/18" CPSSP

EX STOP SIGN

152.05' VC
HIGH POINT ELEV = 311.12
HIGH POINT STA = 29+62
PVI STA = 29+56
PVI ELEV = 311.65
A.D. = -2.76
K = 55.00

EVCS: 30+32.02
EVCE: 310.68

BVCS: 31+29.22
BVCE: 309.44

193.36' VC
LOW POINT ELEV = 309.00
LOW POINT STA = 31+99.24
PVI STA = 32+25.90
PVI ELEV = 308.21
A.D. = 3.52
K = 55.00

EVCS: 33+22.58
EVCE: 310.38

-1.27%

2.24%

EXISTING ℄

EX 10" CPP SD

EX 6" D.I. WM-CENTRAL CITY

EX 2" GAS

EX 8" PVC SEWER

EX SDCB
RIM=310.22
N INV=307.17/10"/CPP
S INV=307.07/10"/PVC

EX SSMH
RIM=310.93
E INV=303.24/8" PVC
S INV=303.43/8" PVC
W INV=303.60/8" PVC

EX SDCB
RIM=308.65
S INV=307.00/10"/CPP

EX 10" WM

EX 12" WM

91 LF 6" PVC S=0.0175
FT/FT

D35 STA 31+95.04, 17.93' R
INSTALL SDCB TYPE 1L
RIM=308.55
N INV (IN)=304.70/18" CPSSP
E INV (OUT)=303.92/18" CPSSP

D34 STA 31+95.80, 32.43' R
INSTALL SDCB TYPE 1L
RIM=305.96
W INV (IN)=301.90/18" CPSSP
E INV (OUT)=302.00/18" CMP
CONNECT TO EX 18" CMP

151 LF 18" CPSSP S=0.0142 FT/FT

EX SDCB
RIM=308.30
N INV=304.25/12"/CPP
E INV=305.15/12"/CONC
SW INV=304.89/6"/PVC
S INV=304.40/6"/CPP

EX SDCB
RIM=307.73
W INV=303.77/12"/CONC
N INV=303.73/12"/CMP
SE INV=303.71/12"/CMP

EX SDCB
RIM=309.89
N INV=307.61/12"/CMP
S INV=307.57/12"/CMP

EX SSMH
RIM=310.45
E INV=299.55/8" PVC
N INV=299.68/8" PVC
W INV=299.68/8" PVC

EX 8" PVC SEWER

D62 STA 34+64.77, 16.98' L
INSTALL SDCB TYPE 1L
RIM=313.20
W INV (IN)=309.13/18" CPSSP
N INV (IN)=309.73/18" CPSSP
E INV (OUT)=309.19/18" CPSSP

44 LF 18" CPSSP S=0.0214 FT/FT

79 LF 18" CPSSP

D37 STA 34+68.13, 17.35' R
INSTALL SDCB TYPE 1L
RIM=313.27
W INV (IN)=308.62/18" CPSSP
S INV (OUT)=308.52/18" CPSSP

STA 34+17.99, 25.76' L
INSTALL SDCB TYPE 1L
RIM=313.30
S INV (IN)=310.29/6" PVC
NW INV (IN)=310.38/18" CPSSP
N INV (OUT)=310.28/18" CPSSP

STATE OF WASHINGTON
LUIS PONCE
38378
REGISTERED
PROFESSIONAL ENGINEER
1/6/17

320
310
300
290

310.9 310.77
311.2 311.11
311.0 310.99
310.5 310.45
309.8 309.81
309.2 309.22
308.8 309.00
308.9 309.23
309.9 309.92
310.8 310.99
312.0 312.11
313.6 313.24
314.4 314.38

29+00 30+00 31+00 32+00 33+00 34+00 35+00

00616.023 4/17/17 KJ

1/05/17 AS-BUILT

DESIGNED BY LP/GKG
DRAWN BY LMC
CHECKED BY LP

R&E

REICHHARDT & EBE
ENGINEERING, INC.
CONSULTING ENGINEERS
PO Box 978 423 Front St., Ste 201 Ph (360) 354-3687
Lynden, Washington 98264 Fax (360) 354-0407

NO.	DATE	REVISION	BY

CITY OF FERNDALE
2095 MAIN STREET
FERNDALE, WA 98248

CHURCH ROAD
STREET IMPROVEMENTS - SEWER
29+00 TO 35+00

JOB# / DWG 07037 PLANPRO
SCALE H: 1"=20' V: 1"=5'
DATE 1-5-17
SHEET 23 of 64

P:\Projects\07037\Dwg\CD AS BUILT-CONSTRUCTION\Plan Sheets\AB 07037 SEWER PLANPRO-CONST.dwg, 3/17/2017 1:26:11 PM

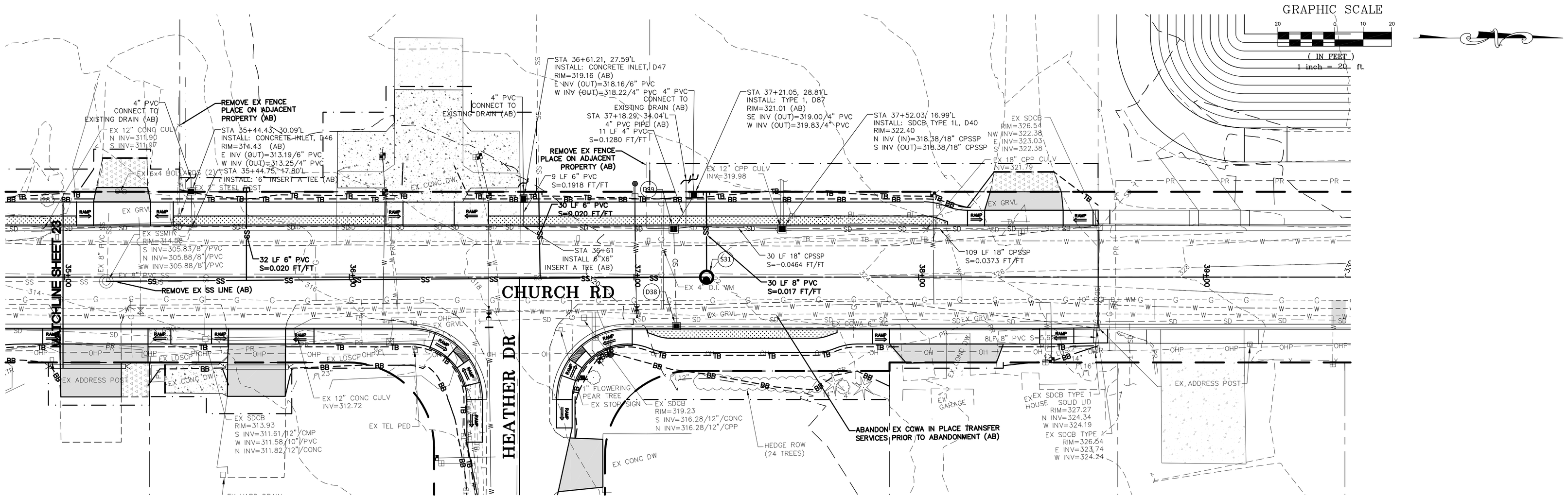

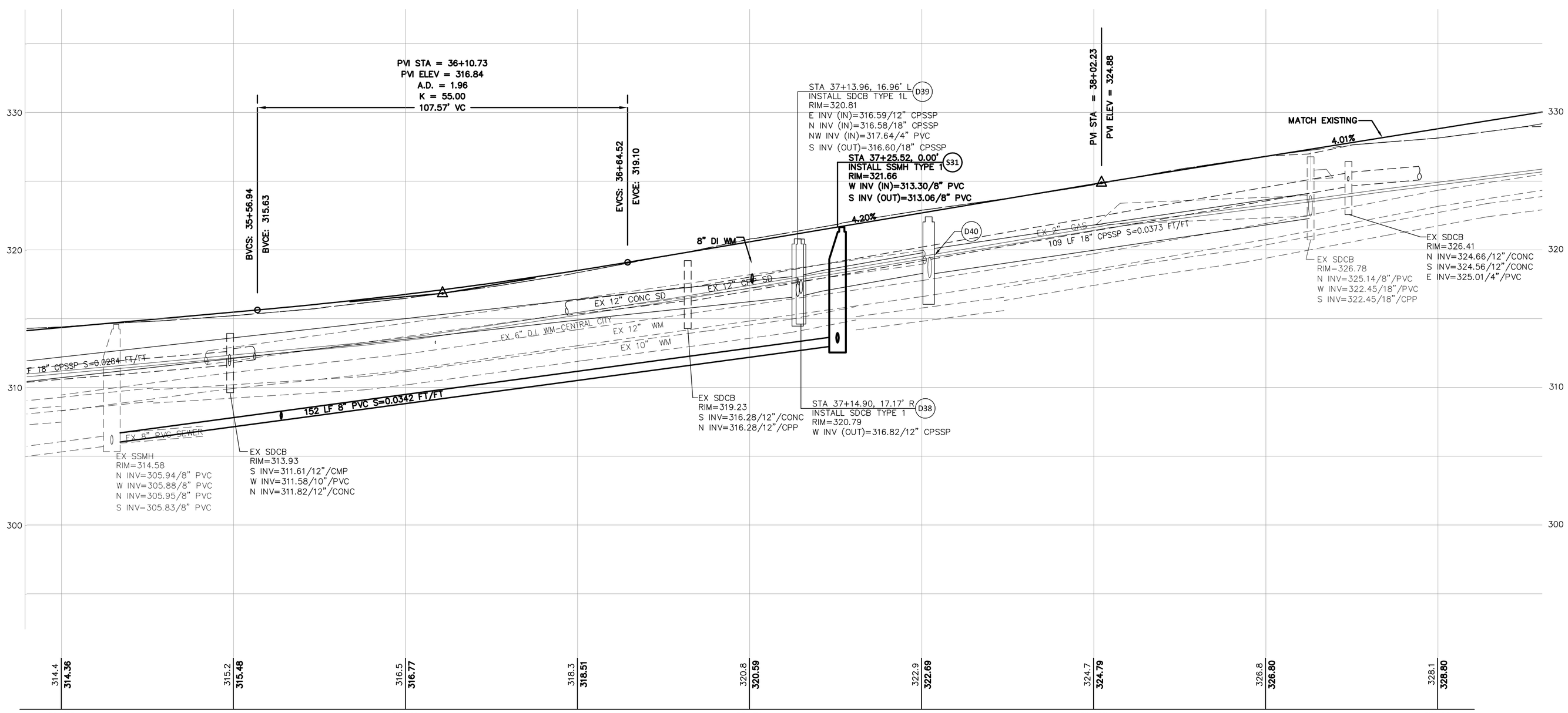

00616.024 4/17/17 KJ

LUIS PONCE STATE OF WASHINGTON 38378 REGISTERED PROFESSIONAL ENGINEER 1/6/17

1/05/17 **AS-BUILT**

DESIGNED BY	LP/GKG
DRAWN BY	LMC
CHECKED BY	LP

R&E
REICHHARDT & EBE ENGINEERING, INC.
CONSULTING ENGINEERS
PO Box 978 423 Front St., Ste 201 Lynden, Washington 98264
Ph (360) 354-3687 Fax (360) 354-0407

NO.	DATE	REVISION	BY

CITY OF FERNDALE
2095 MAIN STREET
FERNDALE, WA 98248

CHURCH ROAD
STREET IMPROVEMENTS - SEWER
35+00 TO 39+00

JOB# / DWG	DATE
07037 PLANPRO	1-5-17
SCALE	SHEET
H: 1"=20' V: 1"=5'	24 of 64

P:\Projects\07037\dwg\CD AS BUILT-CONSTRUCTION\Plan Sheets\AB 07037 SEWER PLAN\PRO-CONST.dwg, 3/17/2017 1:26:53 PM

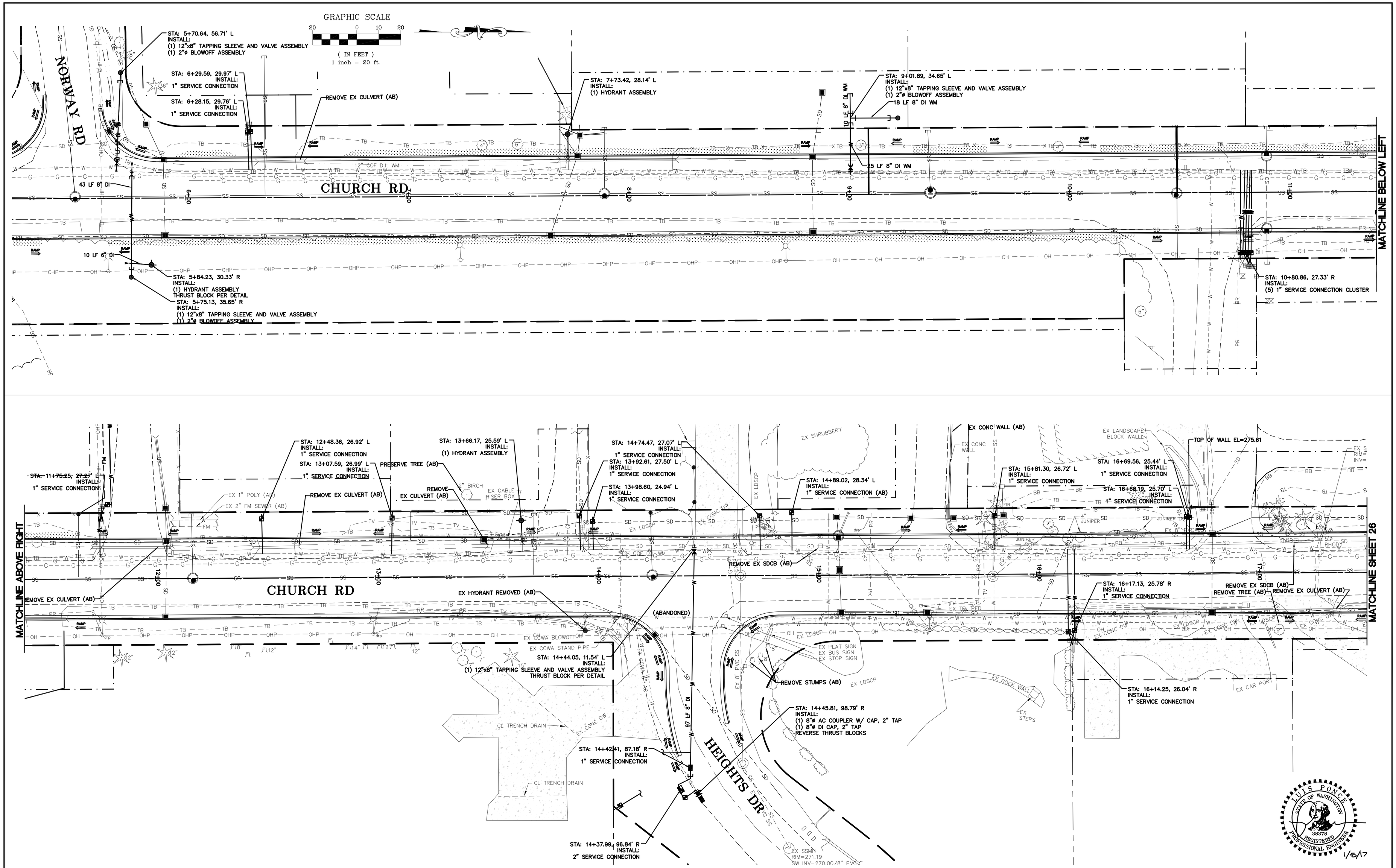

00616.025 4/17/17 KJ

1/05/17 AS-BUILT

DESIGNED BY	LP/GKG
DRAWN BY	LMC
CHECKED BY	LP

R&E
REICHHARDT & EBE
ENGINEERING, INC.
CONSULTING ENGINEERS
PO Box 978 423 Front St., Ste 201 Lynden, Washington 98264
Ph (360) 354-3687 Fax (360) 354-0407

NO.	DATE	REVISION	BY

CITY OF FERNDALE
2095 MAIN STREET
FERNDALE, WA 98248

CHURCH ROAD
STREET IMPROVEMENTS
WATER PLAN

JOB# / DWG		DATE
07037	WATER	1-5-17
SCALE		SHEET
H: 1"=20'	V: N/A	25 of 64

P:\Projects\07037\dwg\CD AS BUILT-CONSTRUCTION\Plan Sheets\AB\07037 WATER-CONST.dwg, 3/17/2017 1:29:07 PM

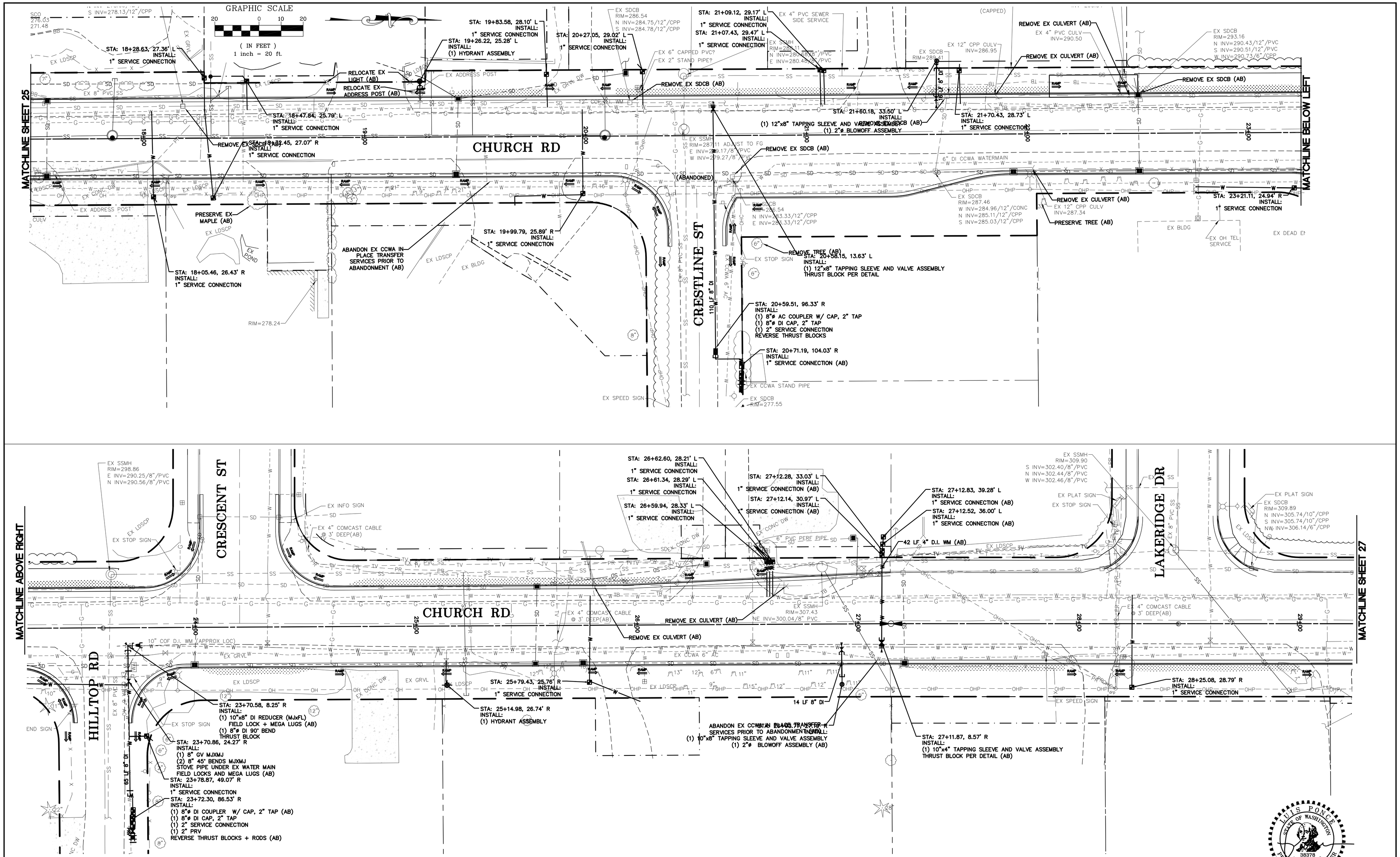

00616.026 4/17/17 KJ

1/05/17 AS-BUILT

DESIGNED BY	LP/GKG
DRAWN BY	LMC
CHECKED BY	LP

REICHHARDT & EBE ENGINEERING, INC.
CONSULTING ENGINEERS
PO Box 978 423 Front St., Ste 201 Lynden, Washington 98264
Ph (360) 354-3687 Fax (360) 354-0407

NO.	DATE	REVISION	BY

CITY OF FERNDALE
2095 MAIN STREET
FERNDALE, WA 98248

CHURCH ROAD
STREET IMPROVEMENTS
WATER PLAN

JOB# / DWG		DATE
07037	WATER	1-5-17
SCALE		SHEET
H: 1"=20'	V: N/A	26 of 64

LUIS PONCE STATE OF WASHINGTON 38379 REGISTERED PROFESSIONAL ENGINEER 1/5/17

P:\Projects\07037\dwg\CD AS BUILT-CONSTRUCTION\Plan Sheets\AB 07037 WATER-CONST.dwg 3/17/2017 1:29:32 PM

GRAPHIC SCALE
20 0 10 20
(IN FEET)
1 inch = 20 ft.

MATCHLINE SHEET 26

MATCHLINE BELOW LEFT

CHURCH RD

S BAKERVIEW PARK DR

STA: 29+28.85, 29.35' R
INSTALL:
1" SERVICE CONNECTION

STA: 30+28.26, 32.09' R
INSTALL:
(1) 10"x8" TAPPING SLEEVE AND VALVE ASSEMBLY
(1) 2"ø BLOWOFF ASSEMBLY

STA: 30+58.13, 28.89' R
INSTALL:
(1) HYDRANT ASSEMBLY

STA: 31+47.98, 37.93' R
INSTALL:
(1) 10"x8" TAPPING SLEEVE AND VALVE ASSEMBLY
(1) 2"ø BLOWOFF ASSEMBLY
THRUST BLOCK

STA: 31+74.24, 28.35' R
INSTALL:
1" SERVICE CONNECTION

REMOVE EX SDCB (AB)

ABANDON EX CCWA IN PLACE TRANSFER SERVICES PRIOR TO ABANDONMENT (AB)

REMOVE EX SDCB (AB)

REMOVE EX SDCB (AB)

STA: 34+05.00, 28.11' L
INSTALL:
1" SERVICE CONNECTION
PRV NEEDED

STA: 34+76.42, 28.50' L
INSTALL:
1" SERVICE CONNECTION

INSTALL 6" TALL PED. CURB

STA: 33+54.07, 16.98' R
CONNECT TO EXISTING 8" DI WV

INSTALL:
113 LF OF 8" DI WATER MAIN
INSTALL PIPE IN THE SAME ALIGNMENT AS THE EXISTING WATER MAIN

STA: 33+57.24, 129.83' R
INSTALL:
1 – 8" x 8" AC TO DI COUPLER
CONNECT TO EXISTING 8" AC WATER MAIN

MATCHLINE ABOVE RIGHT

CHURCH RD

HEATHER DR

STA: 36+11.78, 42.70' L
INSTALL:
1" SERVICE CONNECTION (AB)

REMOVE EX FENCE
PLACE ON ADJACENT PROPERTY (AB)

STA: 37+00.31, 32.78' L
INSTALL:
(1) 10"x8" TAPPING SLEEVE AND VALVE ASSEMBLY
(1) 2" BLOWOFF ASSEMBLY
THRUST BLOCK (AB)

STA: 36+45.73, 42.54' L
INSTALL:
1" SERVICE CONNECTION (AB)

STA: 36+48.97, 28.79' L
INSTALL:
1" SERVICE CONNECTION
PRV NEEDED

STA: 36+12.56, 29.93' L
INSTALL:
1" SERVICE CONNECTION
PRV NEEDED

REMOVE EX SS LINE (AB)

STA: 38+05.10, 29.11' L
INSTALL:
1" SERVICE CONNECTION

STA: 36+49.00, 15.35' R
STOVE PIPE UNDER EXISTING STORM MAIN (AB)

STA: 36+30.37, 63.61' R
INSTALL:
1" SERVICE CONNECTION
PRV NEEDED

STA: 36+34.19, 116.97' R
INSTALL:
(1) 8"ø AC COUPLER W/ CAP, 2" TAP
(1) 8"ø DI CAP, 2" TAP
(1) 2" SERVICE CONNECTION
REVERSE THRUST BLOCKS

STA: 36+91.76, 27.19' R
INSTALL:
(1) HYDRANT ASSEMBLY

STA: 36+87.91, 29.26' R
INSTALL:
1" SERVICE CONNECTION
PRV NEEDED

STA: 36+48.96, 12.29' R
INSTALL:
(1) 10"x8" TAPPING SLEEVE AND VALVE ASSEMBLY
THRUST BLOCK PER DETAIL

ABANDON EX CCWA IN PLACE TRANSFER SERVICES PRIOR TO ABANDONMENT (AB)

STA: 38+46.72, 29.19' R
INSTALL:
1" SERVICE CONNECTION
PRV NEEDED

STA: 39+96.72, 29.19' R
INSTALL:
1" SERVICE CONNECTION
PRV NEEDED

STA: 40+71.32, 26.70' R
INSTALL:
1" SERVICE CONNECTION
PRV NEEDED

LUIS PONCE
STATE OF WASHINGTON
38378
REGISTERED PROFESSIONAL ENGINEER
1/6/17

00616-027 4/17/17 KJ

1/05/17 AS-BUILT	DESIGNED BY LP/GKG DRAWN BY LMC CHECKED BY LP	R&E REICHHARDT & EBE ENGINEERING, INC. CONSULTING ENGINEERS PO Box 978 423 Front St., Ste 201 Lynden, Washington 98264 Ph (360) 354-3687 Fax (360) 354-0407	NO. / DATE / REVISION / BY	CITY OF FERNDALE 2095 MAIN STREET FERNDALE, WA 98248	CHURCH ROAD STREET IMPROVEMENTS WATER PLAN	JOB# / DWG 07037 WATER SCALE H:1"=20' V: N/A	DATE 1-5-17 SHEET 27 of 64

P:\Projects\07037\dwg\CID AS BUILT-CONSTRUCTION\Plan Sheets\AB 07037 WATER-CONST.dwg, 3/17/2017 1:29:57 PM

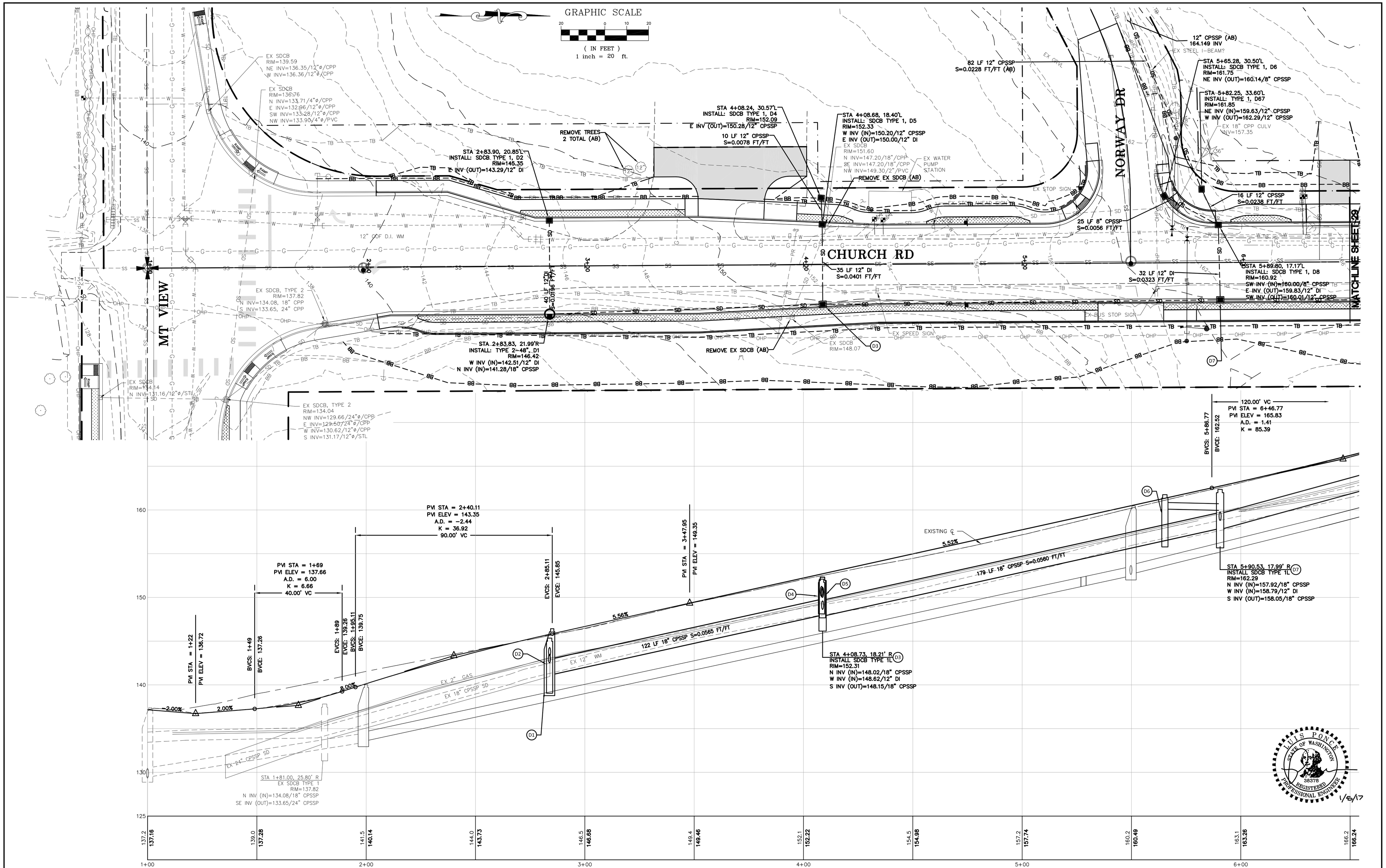

00616.028 4/17/17 KJ

1/05/17 AS-BUILT

DESIGNED BY	LP/GKG
DRAWN BY	LMC
CHECKED BY	LP

R&E
REICHHARDT & EBE
ENGINEERING, INC.
CONSULTING ENGINEERS
PO Box 978 423 Front St., Ste 201 Lynden, Washington 98264
Ph (360) 354-3687 Fax (360) 354-0407

NO.	DATE	REVISION	BY

CITY OF FERNDALE
2095 MAIN STREET
FERNDALE, WA 98248

CHURCH ROAD
STREET IMPROVEMENTS - STORM
1+00 TO 6+50

JOB# / DWG	DATE
07037 PLANPRO	1-5-17
SCALE	SHEET
H: 1"=20' V: 1"=5'	28 of 64

P:\Projects\07037\dwg\CID AS BUILT-CONSTRUCTION\Plan Sheets\AB 07037 STORM PLANPRO-CONST.dwg, 3/17/2017 12:24 PM

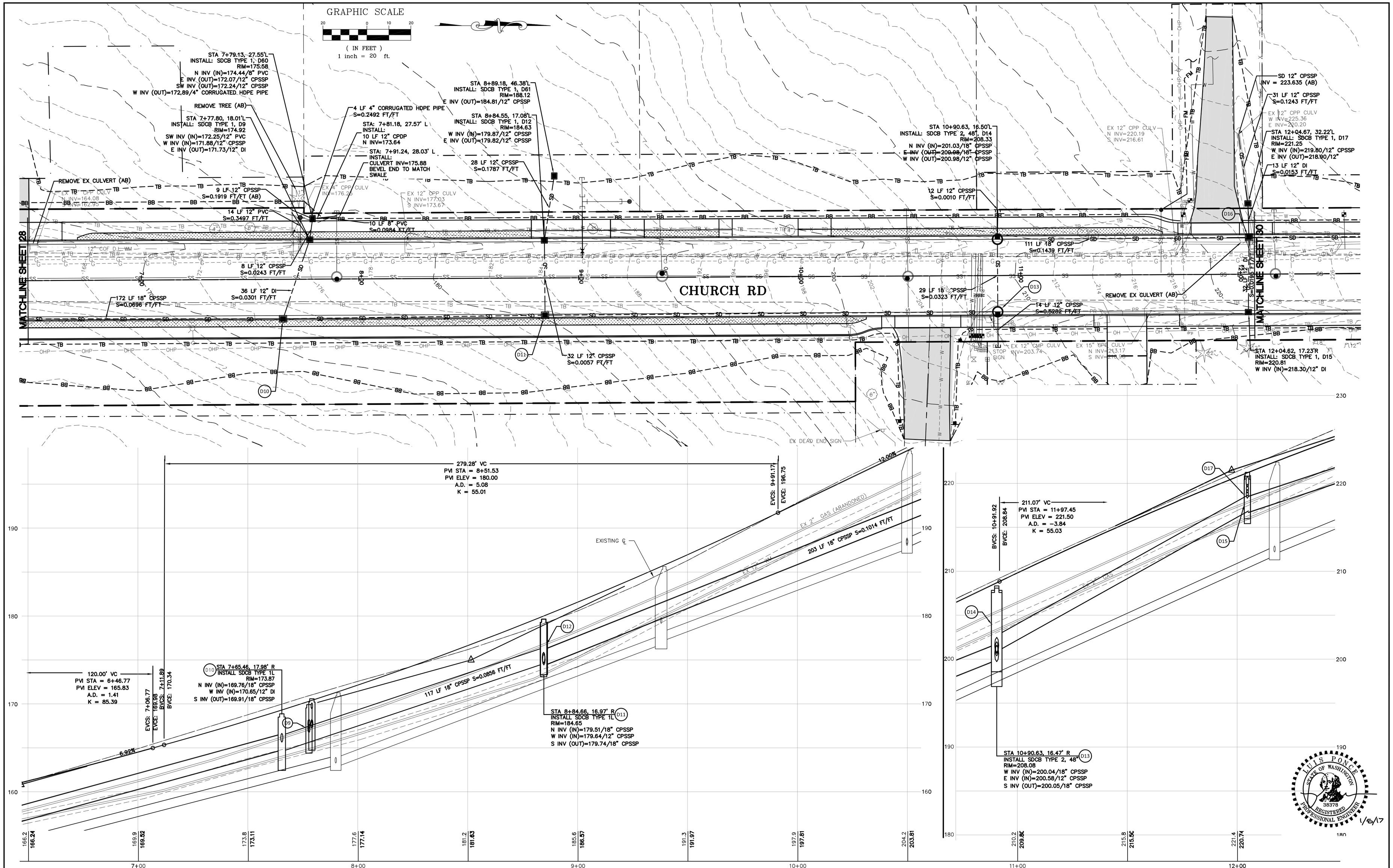

00616.029 4/17/17 KJ

1/05/17 **AS-BUILT**

DESIGNED BY	LP/GKG
DRAWN BY	LMC
CHECKED BY	LP

R&E
REICHHARDT & EBE
ENGINEERING, INC.
CONSULTING ENGINEERS
PO Box 978 423 Front St., Ste 201 Lynden, Washington 98264
Ph (360) 354-3687 Fax (360) 354-0407

NO.	DATE	REVISION	BY

CITY OF FERNDALE
2095 MAIN STREET
FERNDALE, WA 98248

CHURCH ROAD
STREET IMPROVEMENTS - STORM
6+50 TO 12+00

JOB# / DWG		DATE
07037	PLANPRO	1-5-17
SCALE		SHEET
H: 1"=20'	V: 1"=5'	29 of 64

P:\Projects\07037\Dwg\CID AS BUILT CONSTRUCTION\Plan Sheets\AB-07037 STORM PLANPRO-CONST.dwg, 3/17/2017 1:32:56 PM

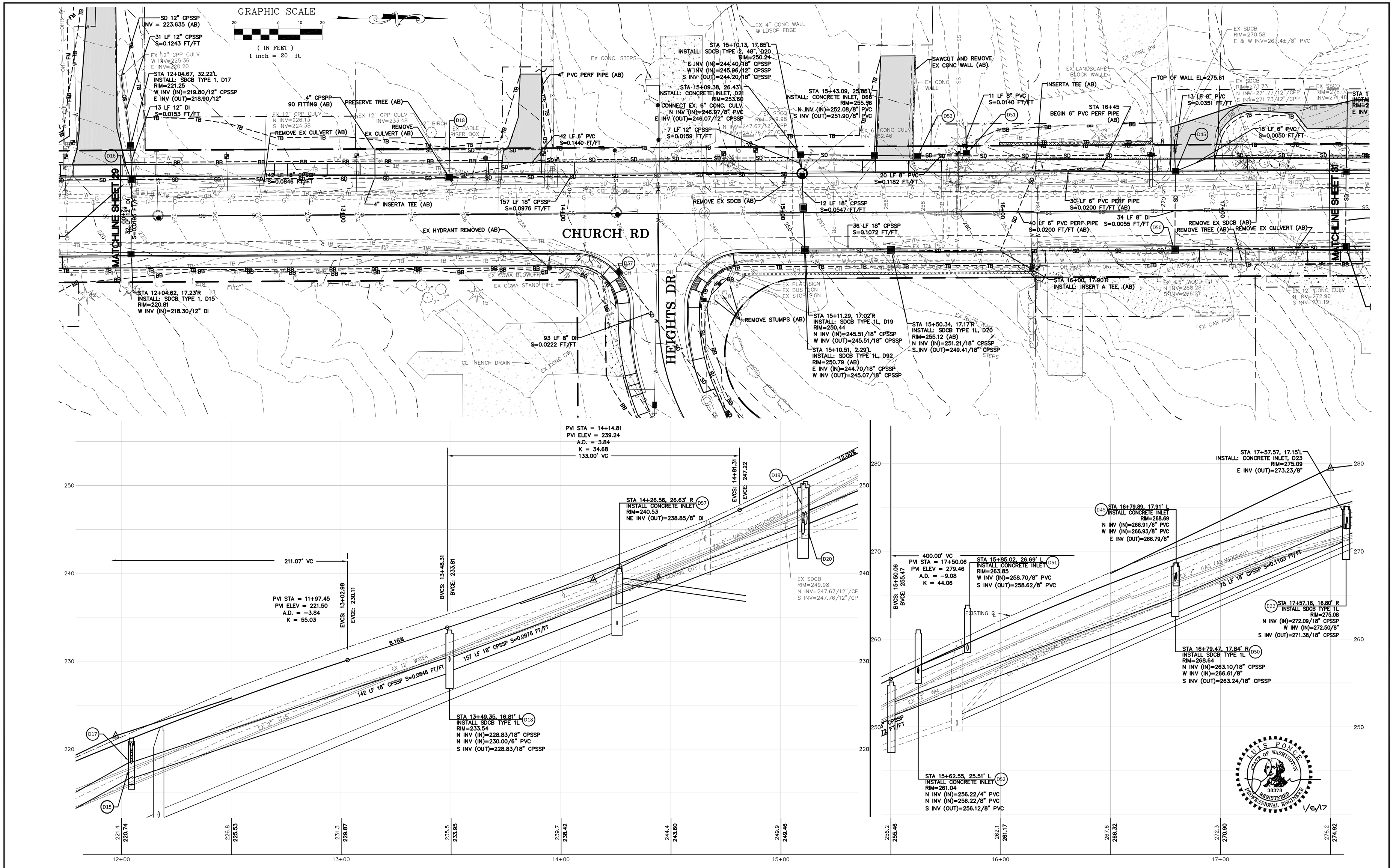

00616.030 4/17/17 KJ

1/05/17 **AS-BUILT**

DESIGNED BY	LP/GKG
DRAWN BY	LMC
CHECKED BY	LP

REICHHARDT & EBE
ENGINEERING, INC.
CONSULTING ENGINEERS
PO Box 978 423 Front St., Ste 201 Lynden, Washington 98264
Ph (360) 354-3687 Fax (360) 354-0407

NO.	DATE	REVISION	BY

CITY OF FERNDALE
2095 MAIN STREET
FERNDALE, WA 98248

CHURCH ROAD
STREET IMPROVEMENTS - STORM
12+00 TO 17+50

JOB# / DWG	DATE
07037 PLANPRO	1-5-17
SCALE	SHEET
H: 1"=20' V: 1"=5'	30 of 64

P:\Projects\07037\Dwg\CD AS BUILT-CONSTRUCTION\Plan Sheets\AB 07037 STORM PLANPRO-CONST.dwg, 3/17/2017 1:33:22 PM

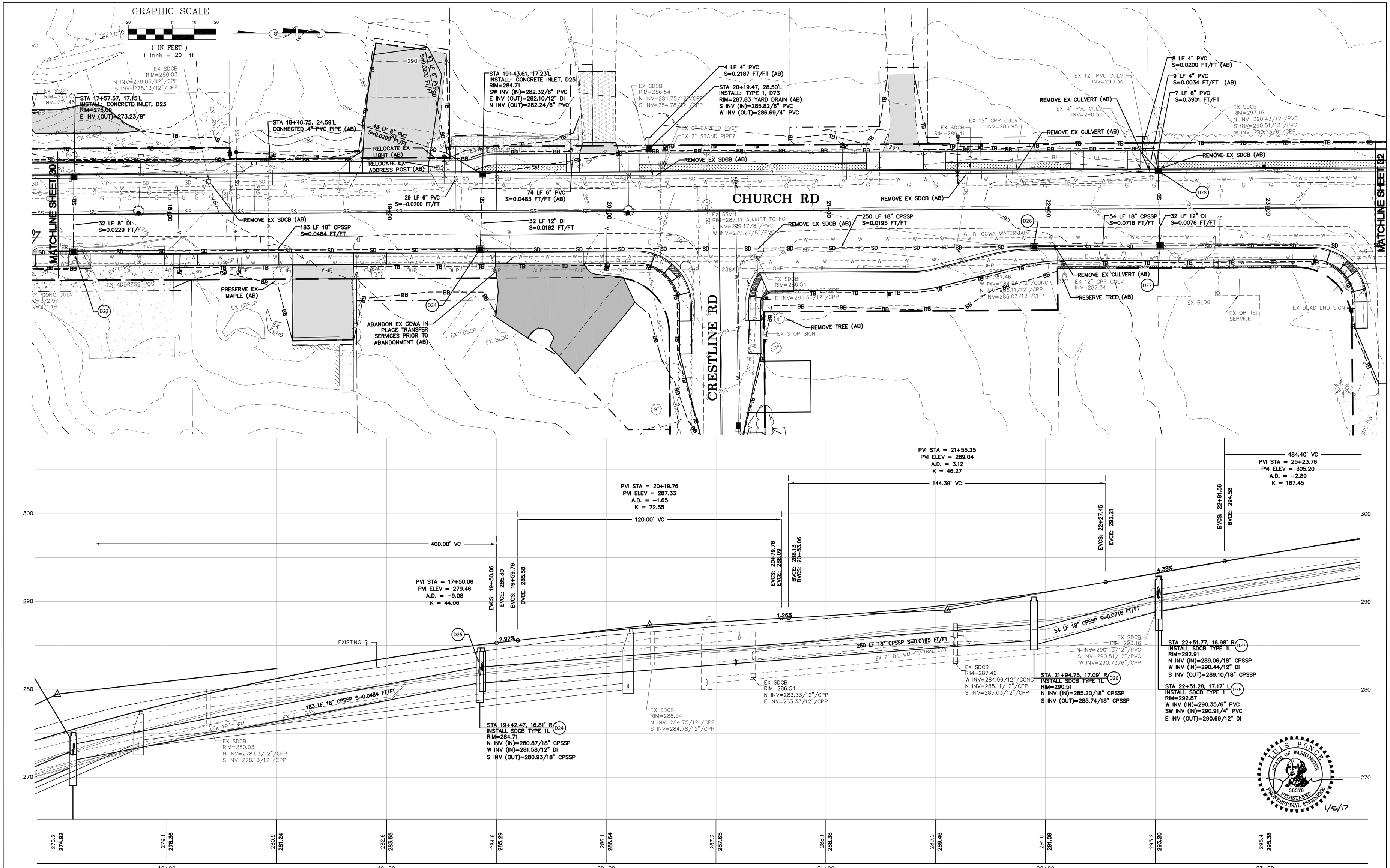

00616.031 4/17/17 KJ

1/05/17 **AS-BUILT**

DESIGNED BY	LP/GKG
DRAWN BY	LMC
CHECKED BY	LP

REICHHARDT & EBE
ENGINEERING, INC.
CONSULTING ENGINEERS
PO Box 978 423 Front St., Ste 201 Lynden, Washington 98264
Ph (360) 354-3687 Fax (360) 354-0407

NO.	DATE	REVISION	BY

CITY OF FERNDALE
2095 MAIN STREET
FERNDALE, WA 98248

CHURCH ROAD
STREET IMPROVEMENTS - STORM
17+50 TO 23+50

JOB# / DWG	DATE
07037 PLANPRO	1-5-17
SCALE H: 1"=20' V: 1"=5'	SHEET 31 of 64

P:\Projects\07037\Dwg\CD AS BUILT-CONSTRUCTION\Plan Sheets\AB 07037 STORM PLAN\PRO-CONST.dwg, 1/21/2017 8:57:37 AM

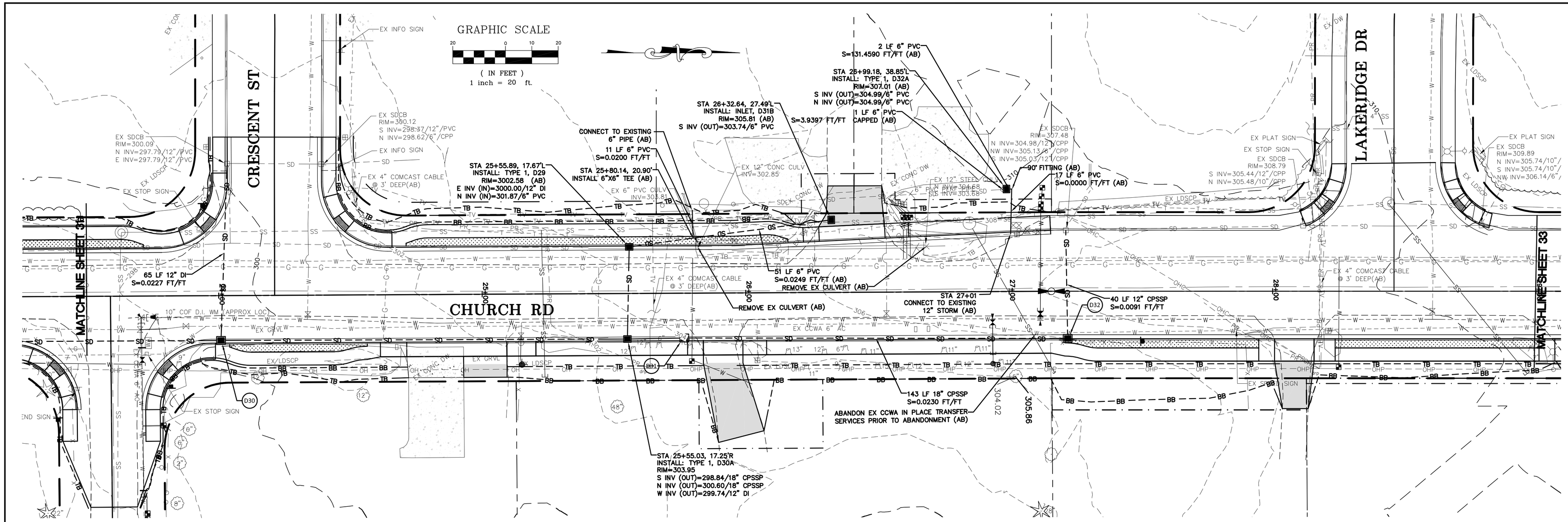

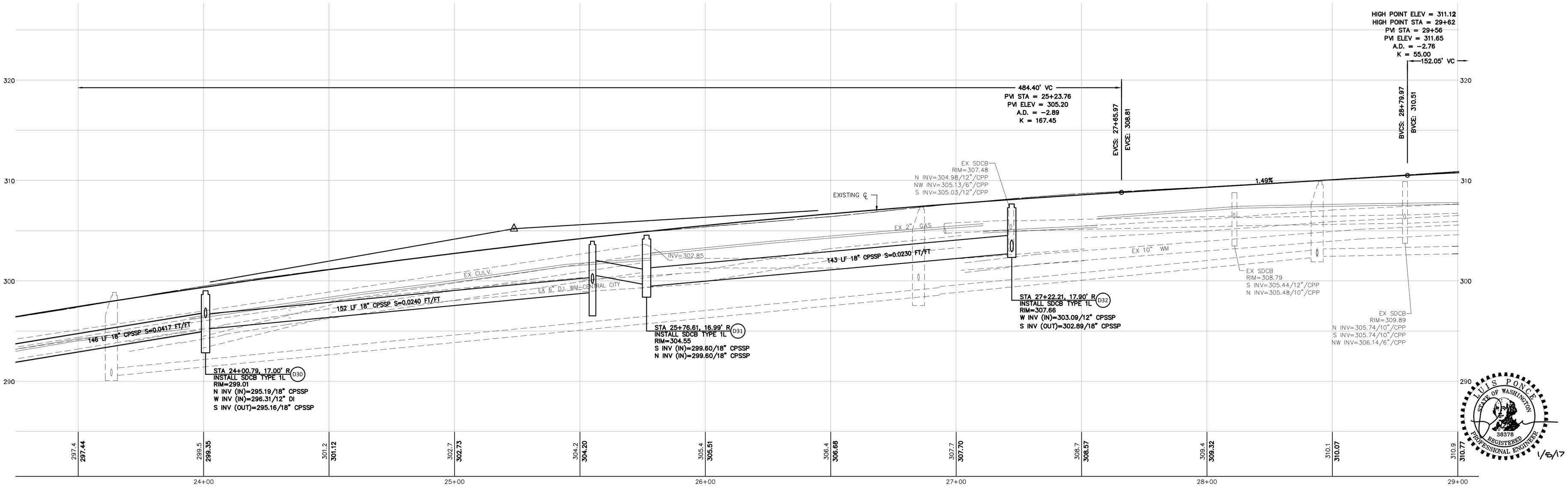

LUIS PONCE
STATE OF WASHINGTON
38378
REGISTERED PROFESSIONAL ENGINEER
1/5/17

00616.032 4/17/17 KJ

1/05/17 AS-BUILT	DESIGNED BY LP/GKG DRAWN BY LMC CHECKED BY LP	REICHHARDT & EBE ENGINEERING, INC. CONSULTING ENGINEERS PO Box 978 423 Front St., Ste 201 Lynden, Washington 98264 Ph (360) 354-3687 Fax (360) 354-0407	NO. / DATE / REVISION / BY	CITY OF FERNDALE 2095 MAIN STREET FERNDALE, WA 98248	CHURCH ROAD STREET IMPROVEMENTS - STORM 23+50 TO 29+00	JOB# / DWG 07037 PLANPRO SCALE H: 1"=20' V: 1"=5' DATE 1-5-17 SHEET 32 of 64

P:\Projects\07037\Dwg\CD AS BUILT CONSTRUCTION\Plan Sheets\AB 07037 STORM PLANPRO-CONST.dwg, 3/17/2017 1:34:46 PM

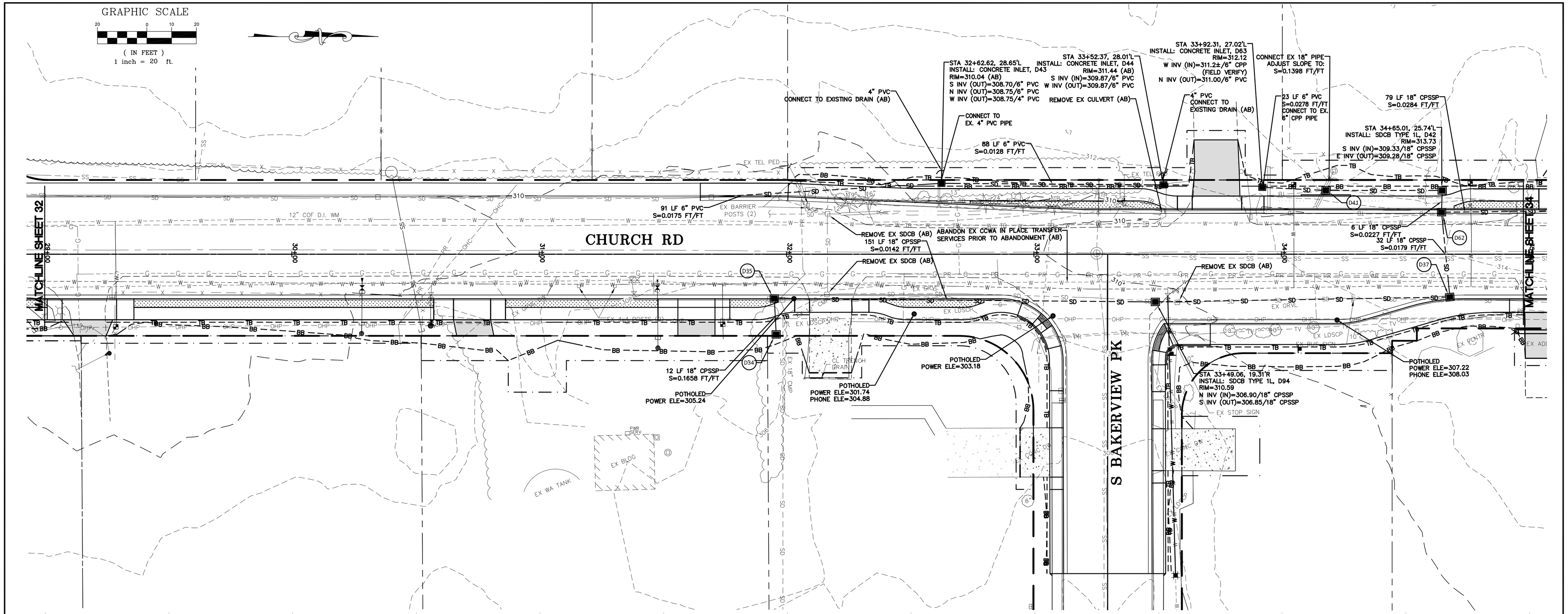

00616.033 4/17/17 KJ

P:\Projects\07037\Dwg\CD AS BUILT CONSTRUCTION\Plan Sheets\AB 07037 STORM PLANPRO-CONST.dwg, 3/17/2017 1:35:20 PM

1/05/17 **AS-BUILT**

DESIGNED BY LP/GKG
DRAWN BY LMC
CHECKED BY LP

R&E
REICHHARDT & EBE
ENGINEERING, INC.
CONSULTING ENGINEERS
PO Box 978 423 Front St., Ste 201 Lynden, Washington 98264
Ph (360) 354-3687 Fax (360) 354-0407

NO.	DATE	REVISION	BY

CITY OF FERNDALE
2095 MAIN STREET
FERNDALE, WA 98248

CHURCH ROAD
STREET IMPROVEMENTS - STORM
29+00 TO 35+00

JOB# / DWG	DATE
07037 PLANPRO	1-5-17
SCALE	SHEET
H: 1"=20' V: 1"=5'	33 of 64

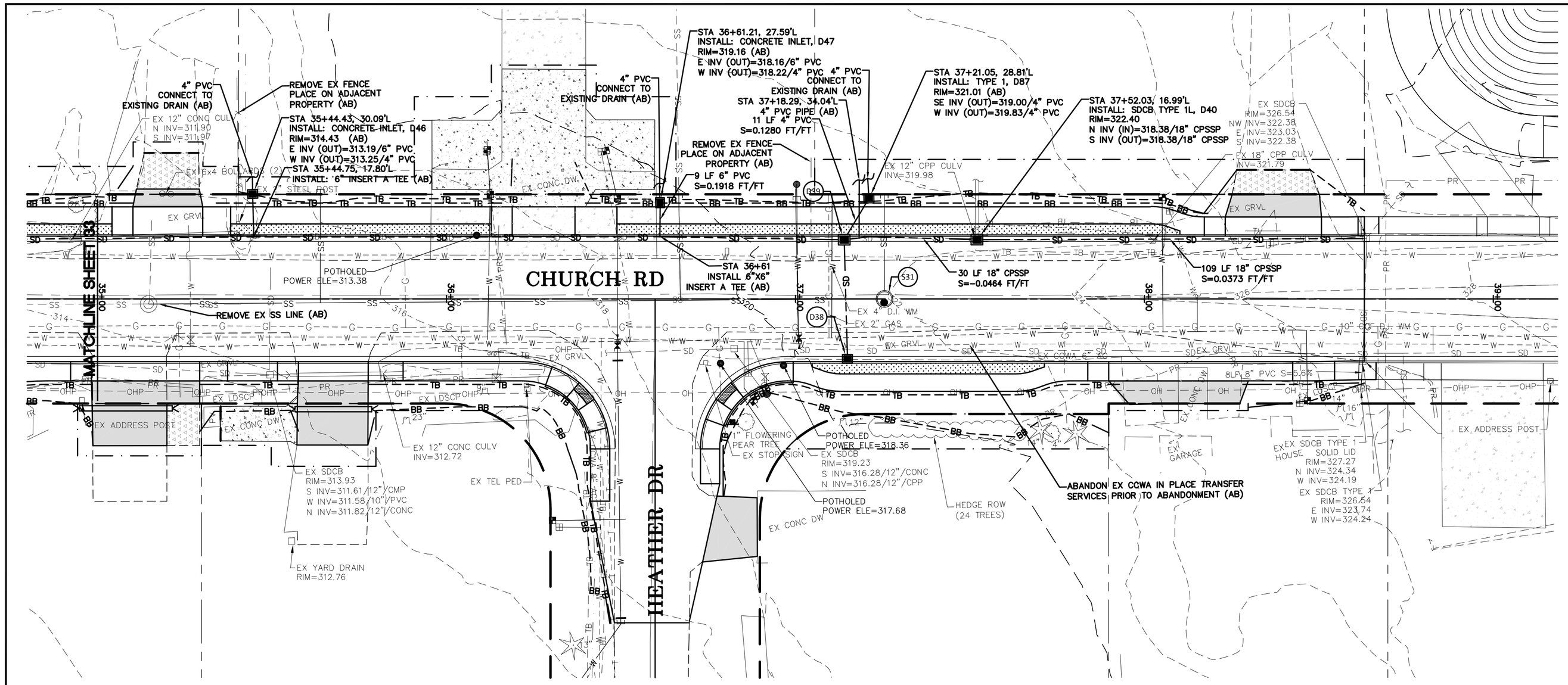

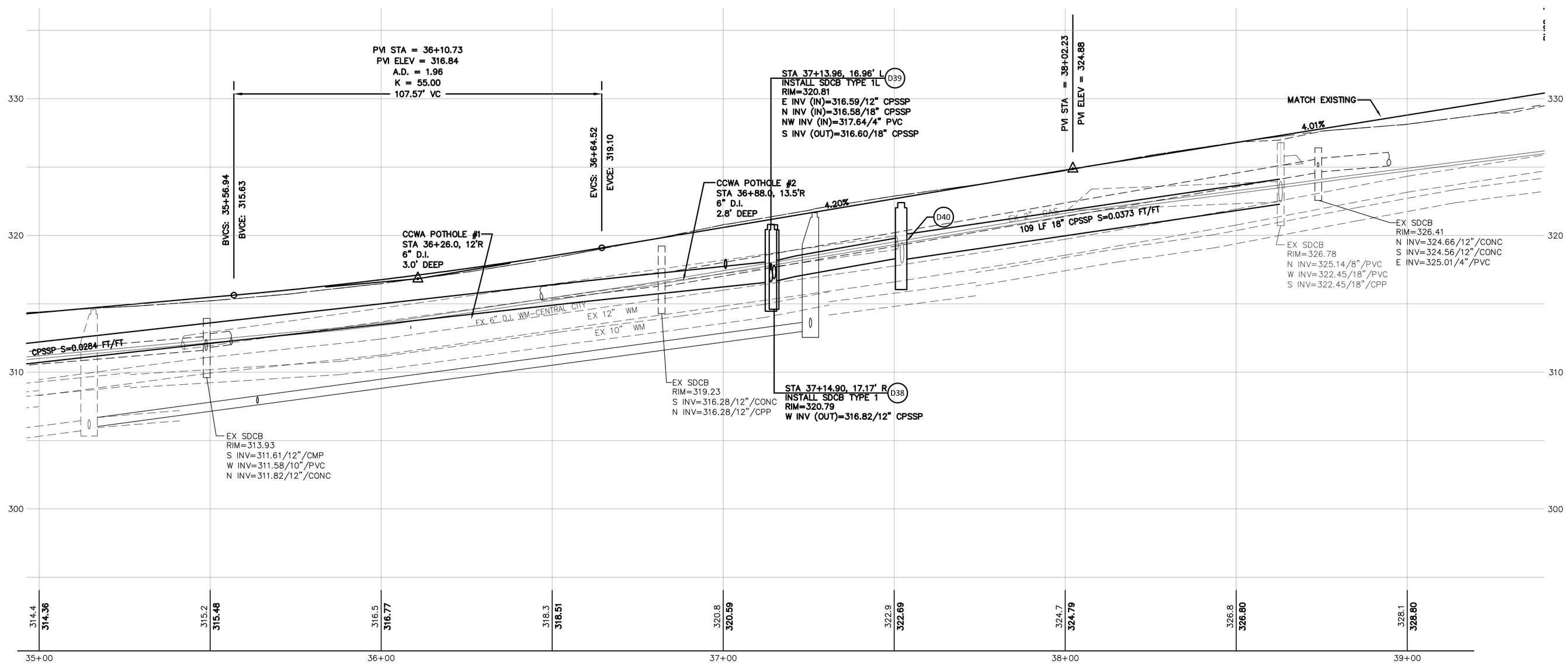

LUIS PONCE
STATE OF WASHINGTON
38378
REGISTERED PROFESSIONAL ENGINEER
1/6/17

00616.034 4/17/17 KJ

P:\Projects\07037\Dwg\CD AS BUILT CONSTRUCTION\Plan Sheets\AB 07037 STORM PLANPRO CONST.dwg 3/17/2017 3:55:55 PM

1/05/17 **AS-BUILT**

DESIGNED BY LP/GKG
DRAWN BY LMC
CHECKED BY LP

REICHHARDT & EBE
ENGINEERING, INC.
CONSULTING ENGINEERS
PO Box 978 423 Front St., Ste 201 Lynden, Washington 98264
Ph (360) 354-3687 Fax (360) 354-0407

NO.	DATE	REVISION	BY

CITY OF FERNDALE
2095 MAIN STREET
FERNDALE, WA 98248

CHURCH ROAD
STREET IMPROVEMENTS - STORM
35+00 TO 39+00

JOB# / DWG: 07037 PLANPRO
DATE: 1-5-17
SCALE: H: 1"=20' V: 1"=5'
SHEET: 34 of 64

NORWAY DR.

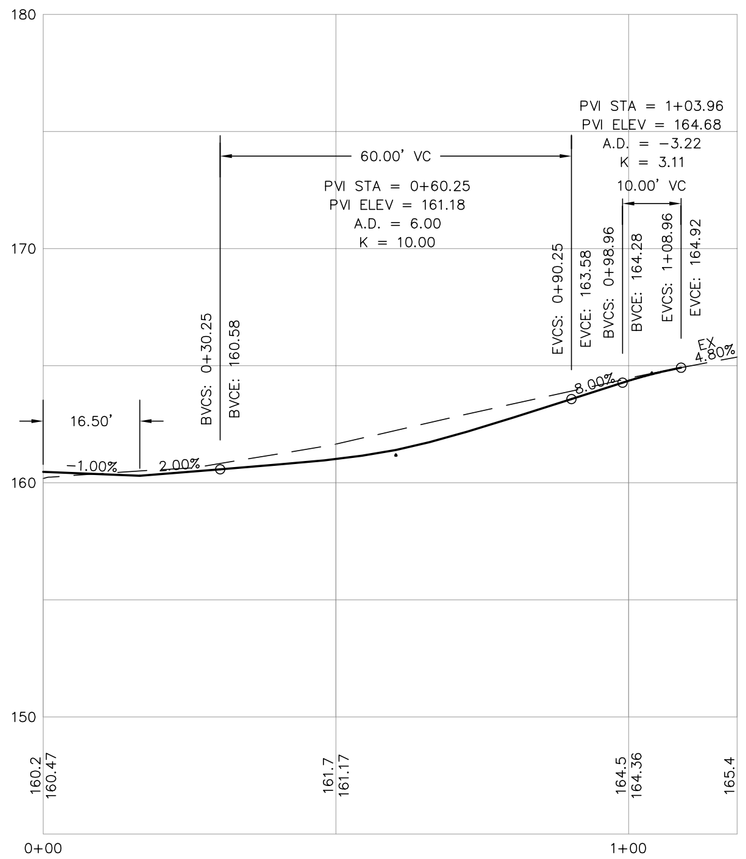

HEIGHTS DR

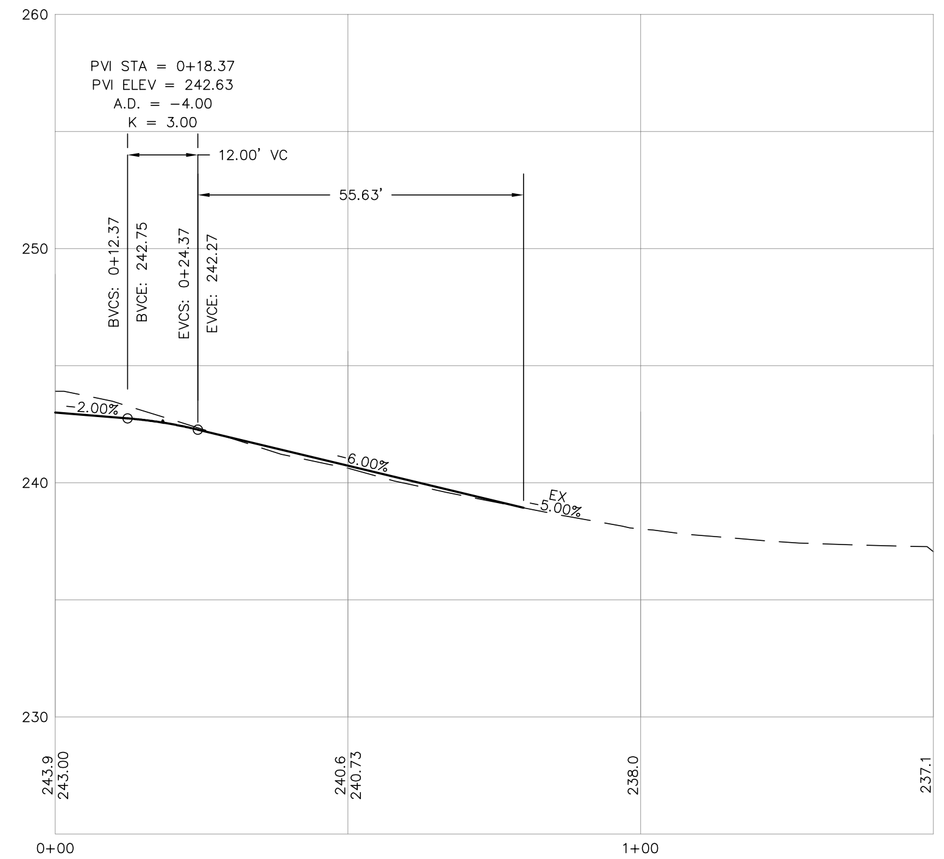

CRESTLINE ST

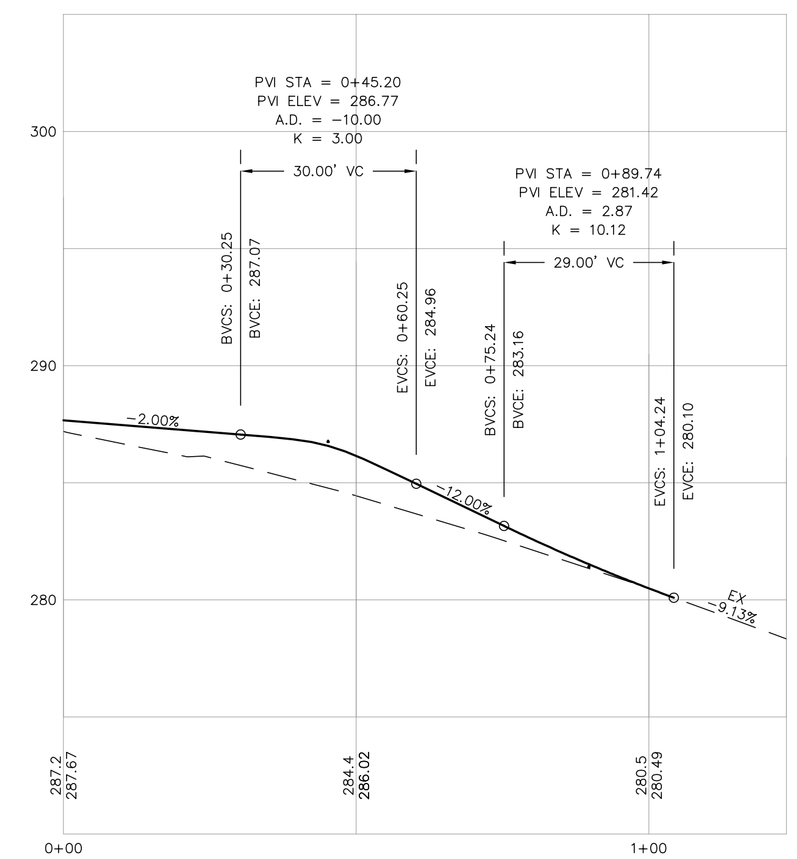

HILLTOP RD

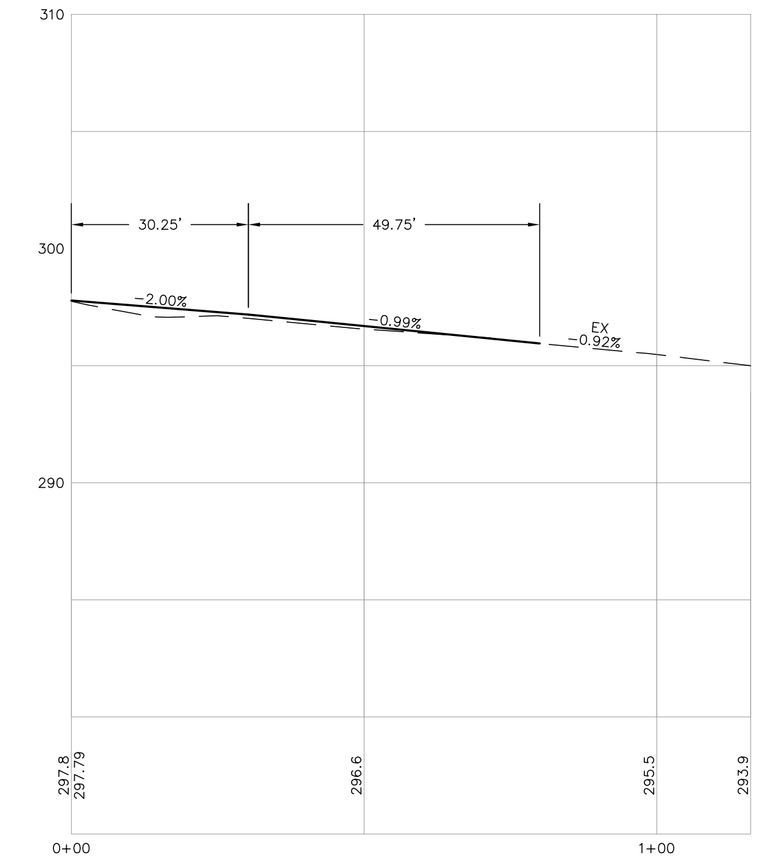

CRESCENT RD

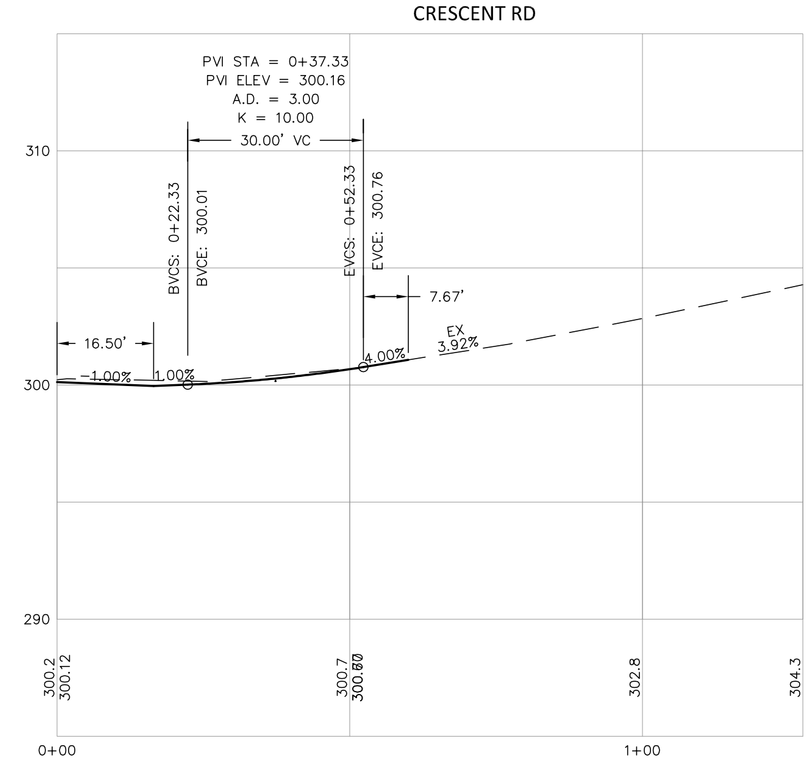

S. BAKERVIEW PARK DR

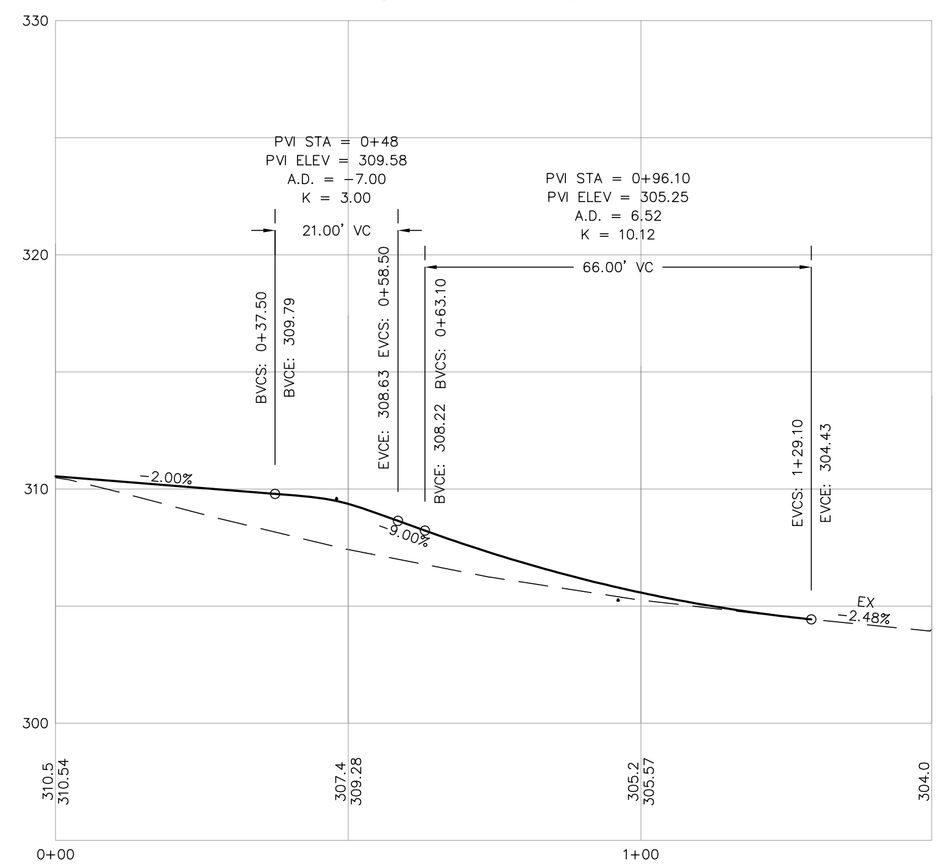

HEATHER DR

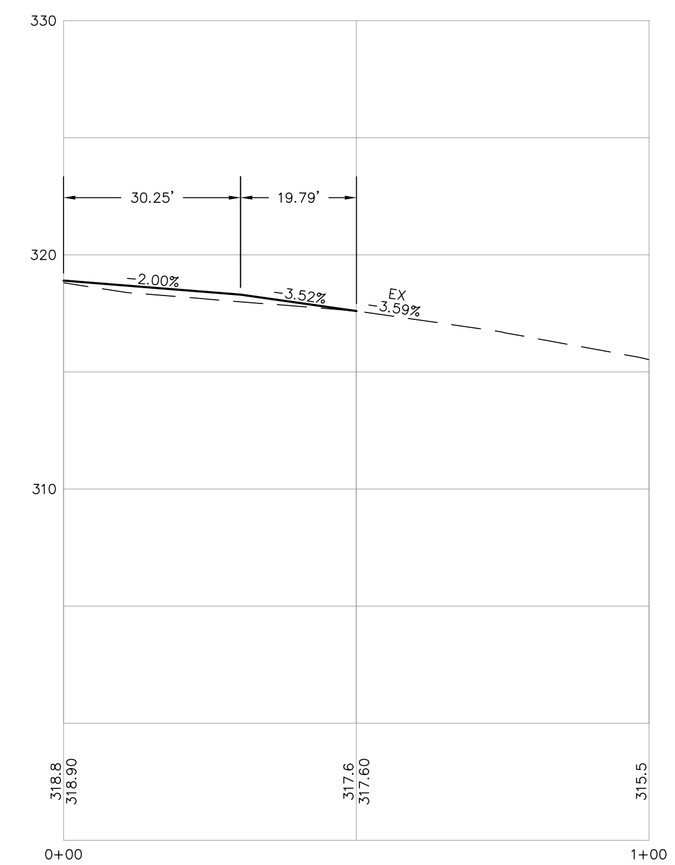

LUIS PONCE
STATE OF WASHINGTON
38378
REGISTERED
PROFESSIONAL ENGINEER
1/5/17

00616.035 4/17/17 KJ

1/05/17 AS-BUILT	DESIGNED BY LP DRAWN BY ARS CHECKED BY LP	R&E REICHHARDT & EBE ENGINEERING, INC. CONSULTING ENGINEERS PO Box 978 423 Front St., Ste 201 Lynden, Washington 98264 Ph (360) 354-3687 Fax (360) 354-0407	NO. / DATE / REVISION / BY	CITY OF FERNDALE 2095 MAIN STREET FERNDALE, WA 98248	CHURCH ROAD STREET IMPROVEMENTS INTERSECTION PROFILES	JOB# / DWG 07037 DWY-INT SCALE H: 1"=20' V: N/A	DATE 1-5-17 SHEET 35 of 64

P:\Projects\07037\dwg\CD AS BUILT-CONSTRUCTION\Plan Sheets\AB 07037 DWY-INT-CONST.dwg, 3/17/2017 1:38:13 PM

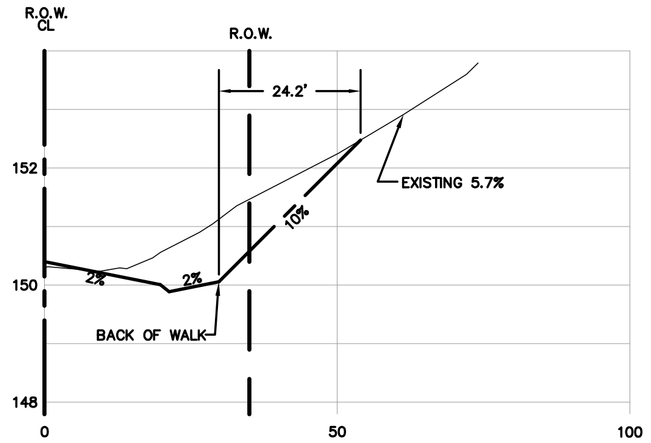

MATCHES ALONG DRIVEWAY
STATION 3+67, LT

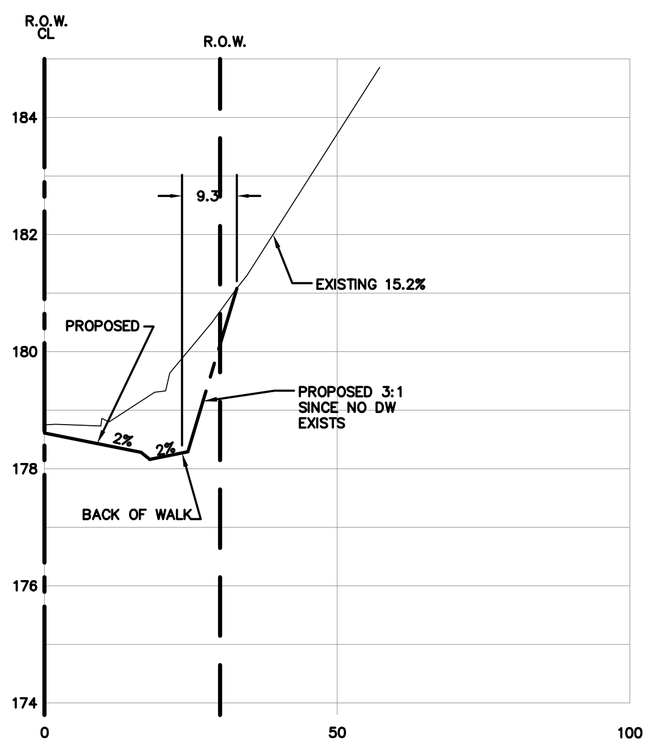

MATCHES ALONG DRIVEWAY
STATION 8+17, LT

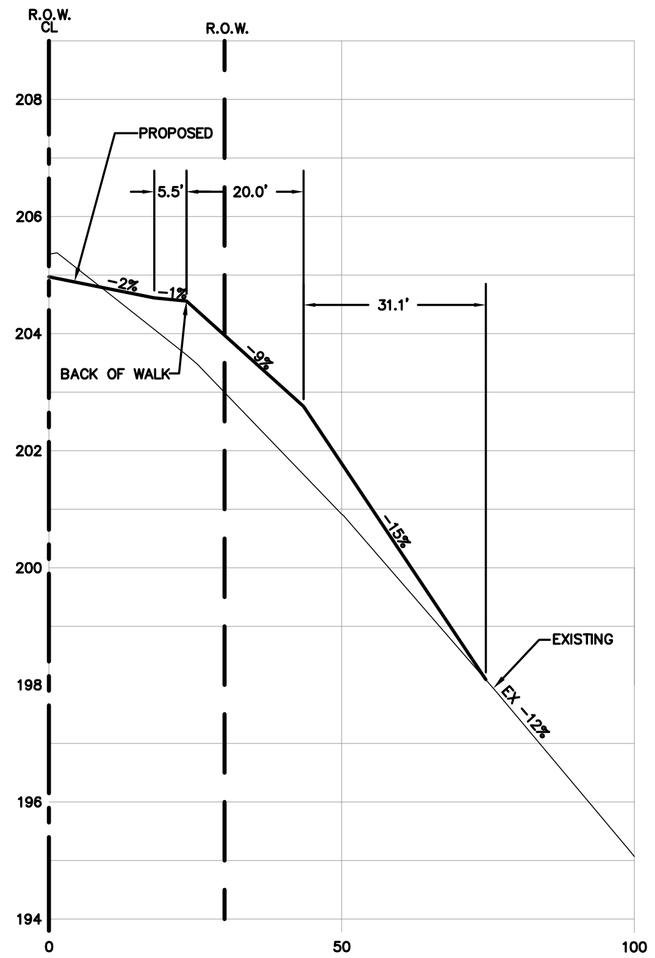

MATCHES ALONG DRIVEWAY
STATION 10+59.68, RT

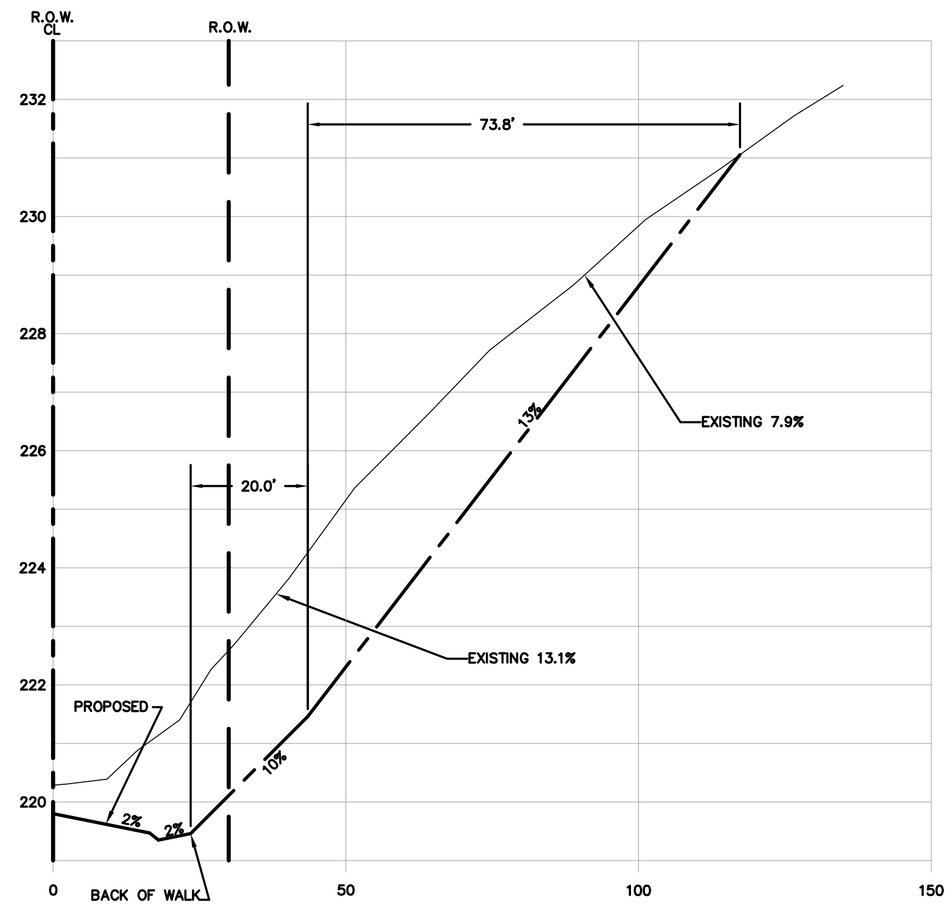

MATCHES ALONG DRIVEWAY
STATION 11+90, LT

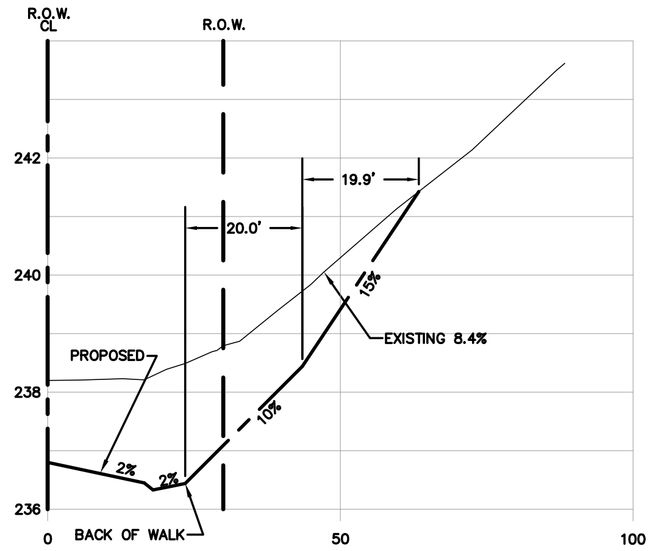

MATCHES ALONG DRIVEWAY
STATION 13+83, LT

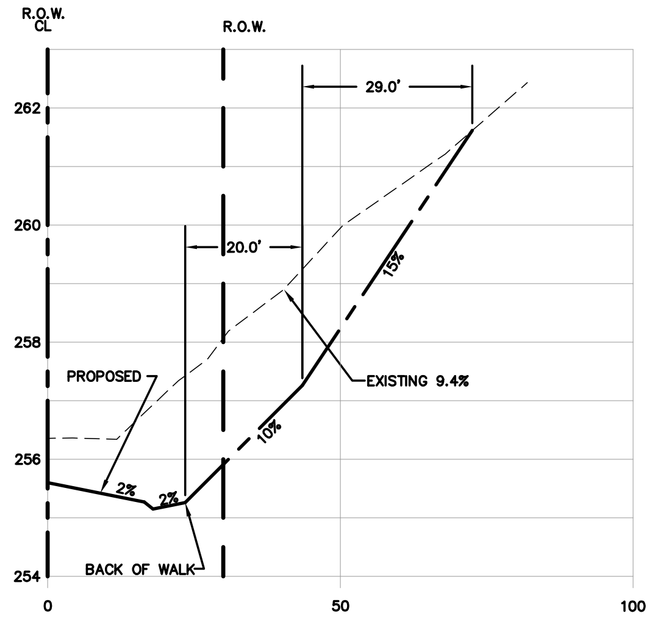

MATCHES ALONG DRIVEWAY
STATION 15+51, LT

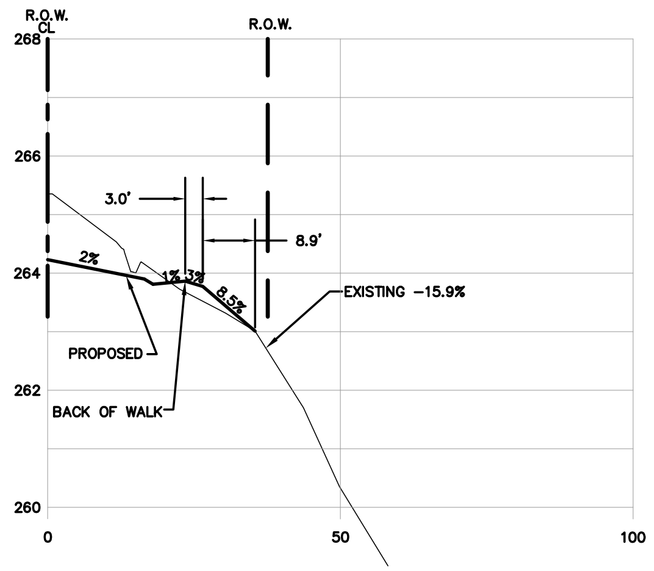

MATCHES AT DRIVEWAY
STATION 16+29, RT

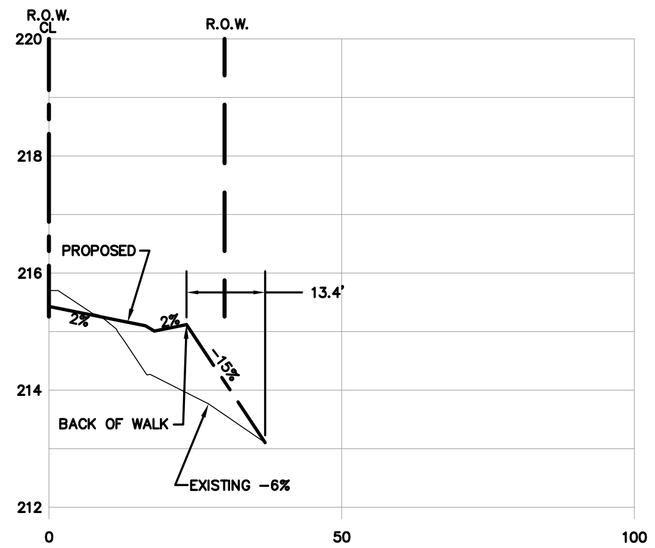

MATCHES ALONG DRIVEWAY
STATION 11+49, RT

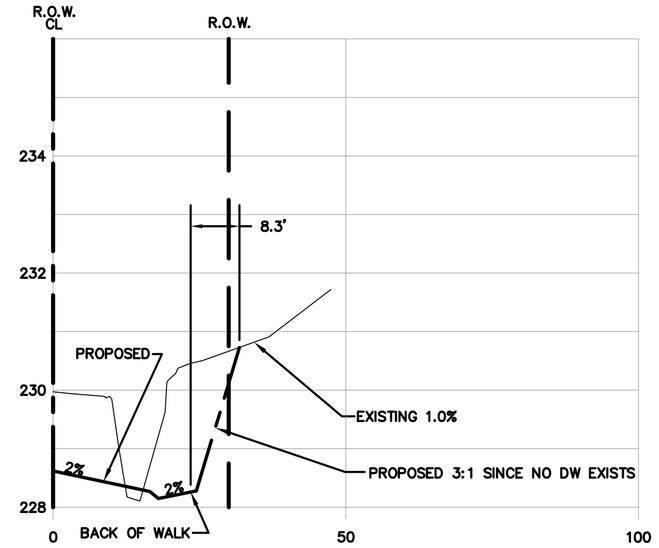

MATCHES ALONG DRIVEWAY
STATION 12+85, LT

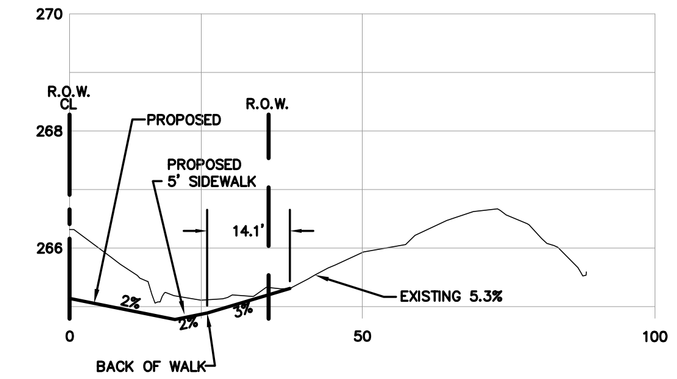

MATCHES ALONG DRIVEWAY
STATION 16+38, RT

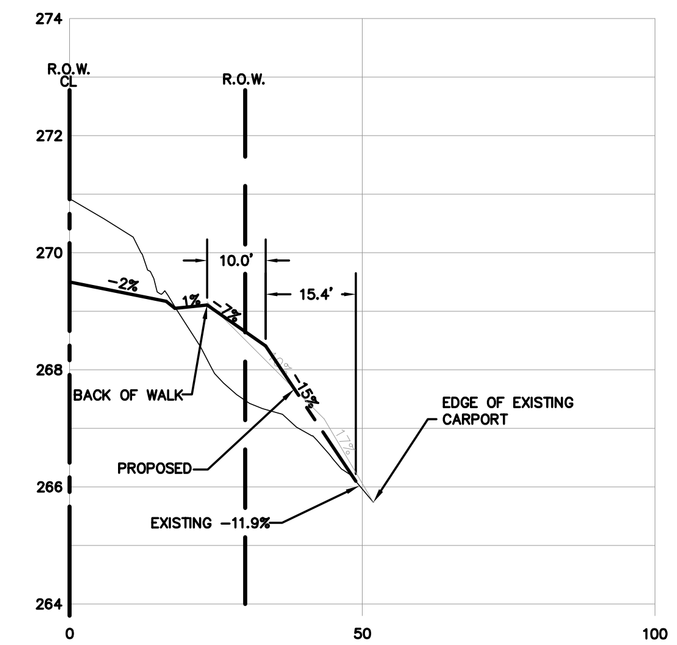

MATCHES AT DRIVEWAY
STATION 16+84, RT

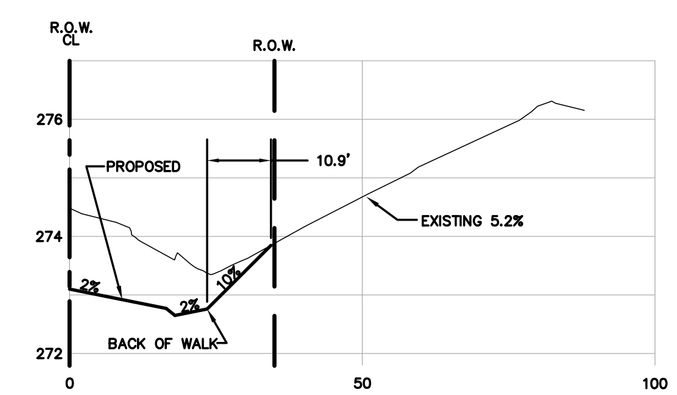

MATCHES ALONG DRIVEWAY
STATION 17+27, RT

00616.036 4/17/17 KJ

LUIS PONCE
STATE OF WASHINGTON
38378
REGISTERED
PROFESSIONAL ENGINEER
1/5/17

1/05/17 AS-BUILT	DESIGNED BY LP DRAWN BY ARS CHECKED BY LP	R&E REICHHARDT & EBE ENGINEERING, INC. CONSULTING ENGINEERS PO Box 978 423 Front St., Ste 201 Lynden, Washington 98264 Ph (360) 354-3687 Fax (360) 354-0407	NO. / DATE / REVISION / BY	CITY OF FERNDALE 2095 MAIN STREET FERNDALE, WA 98248	CHURCH ROAD STREET IMPROVEMENTS DRIVEWAY PROFILES	JOB# / DWG 07037 DWY-INT SCALE H: 1"=20' V: N/A DATE 1-5-17 SHEET 36 of 64

P:\Projects\07037\dwg\CD AS BUILT-CONSTRUCTION\Plan Sheets\AB 07037 DWY-INT-CONST.dwg, 3/17/2017 1:38:37 PM

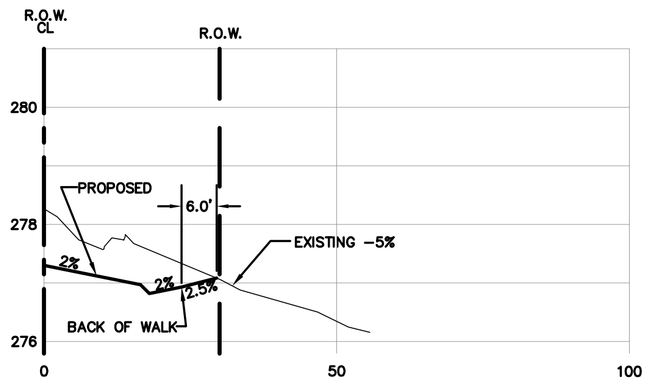

MATCHES ALONG DRIVEWAY
STATION 17+83, RT

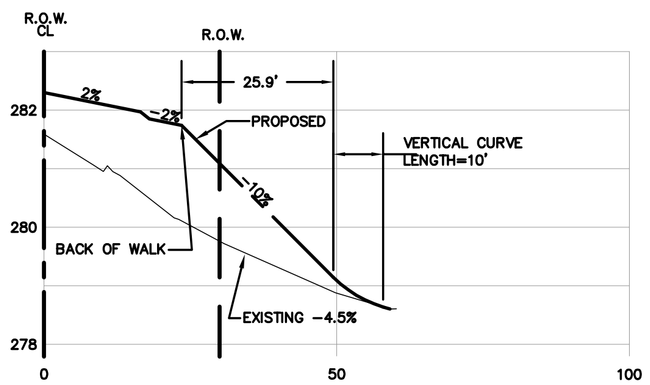

MATCHES ALONG DRIVEWAY
STATION 18+71, RT

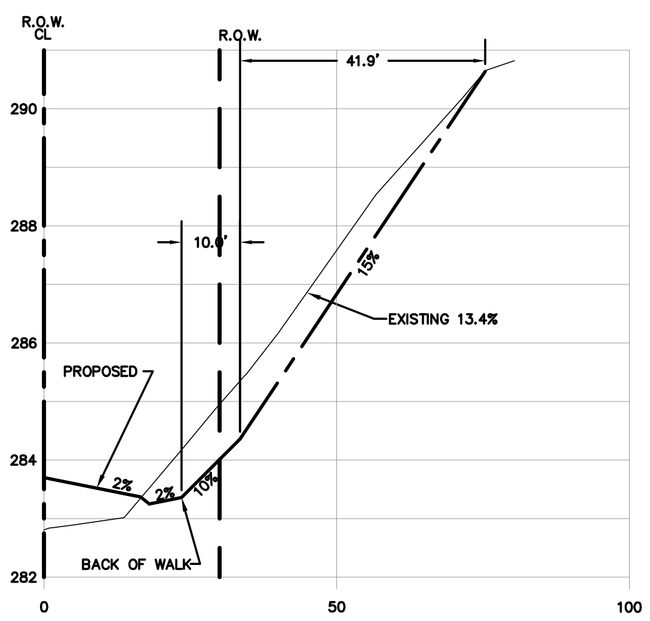

MATCHES ALONG DRIVEWAY
STATION 19+04, LT

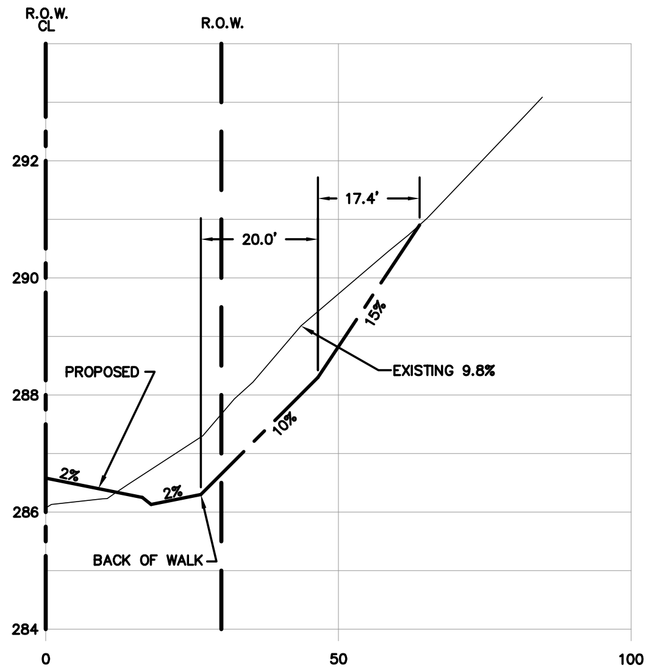

MATCHES ALONG DRIVEWAY
STATION 19+97, LT

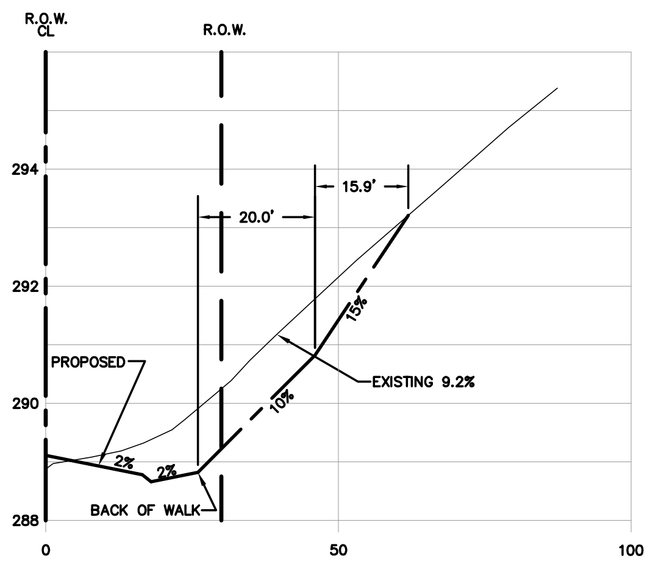

MATCHES ALONG DRIVEWAY
STATION 21+36, LT

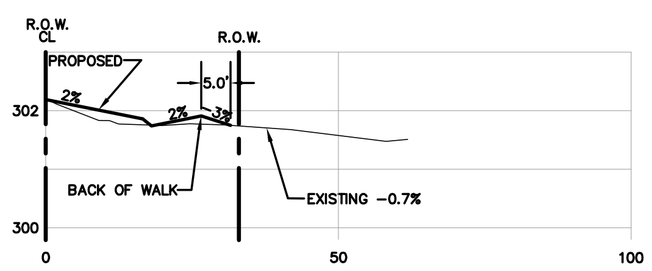

MATCHES ALONG DRIVEWAY
STATION 24+83, RT

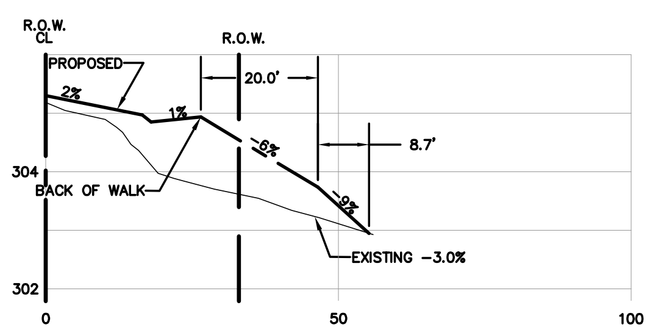

MATCHES ALONG DRIVEWAY
STATION 25+91, RT

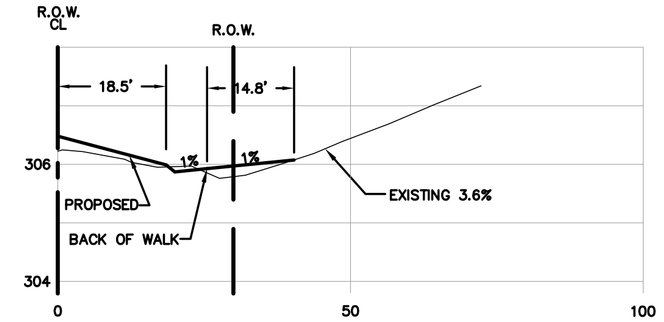

MATCHES ALONG DRIVEWAY
STATION 26+41, LT

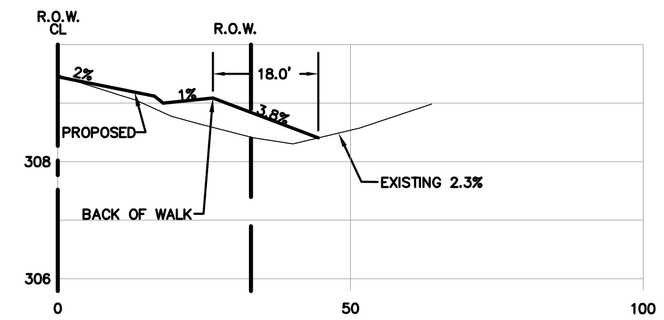

MATCHES ALONG DRIVEWAY
STATION 28+09, RT

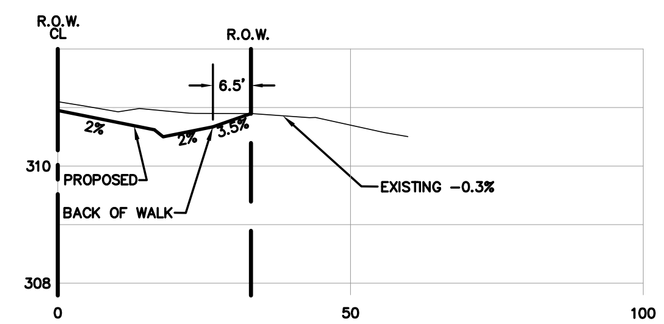

MATCHES ALONG DRIVEWAY
STATION 29+18, RT

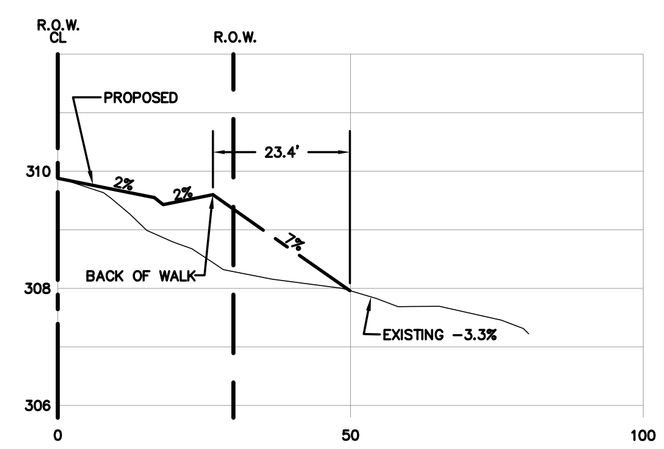

MATCHES ALONG DRIVEWAY
STATION 30+95, RT

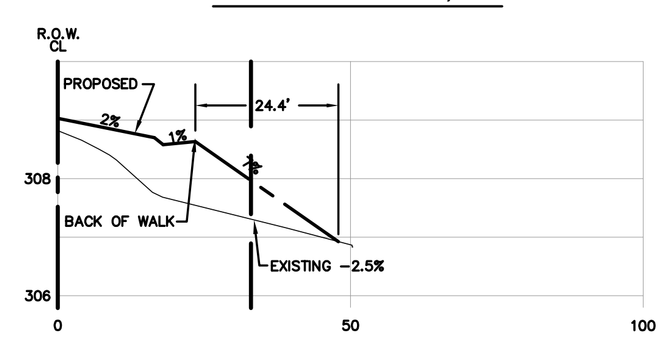

MATCHES ALONG DRIVEWAY
STATION 32+18, RT

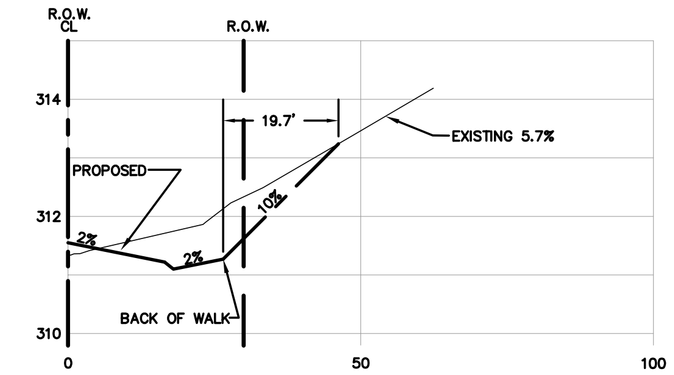

MATCHES ALONG DRIVEWAY
STATION 33+75, LT

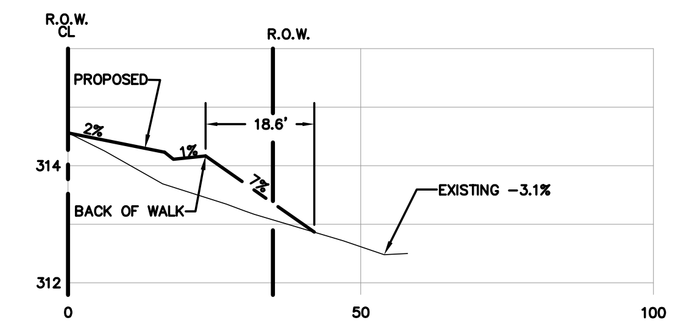

MATCHES ALONG DRIVEWAY
STATION 35+09, RT

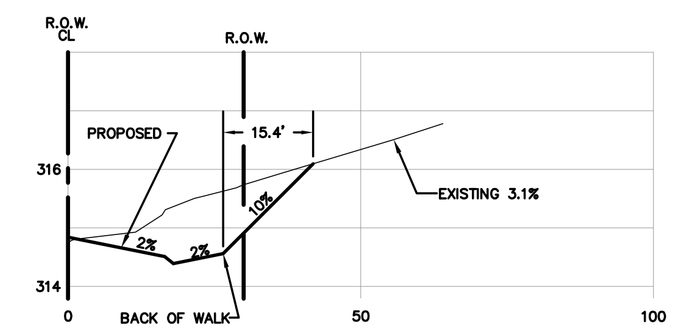

MATCHES ALONG DRIVEWAY
STATION 35+22, LT

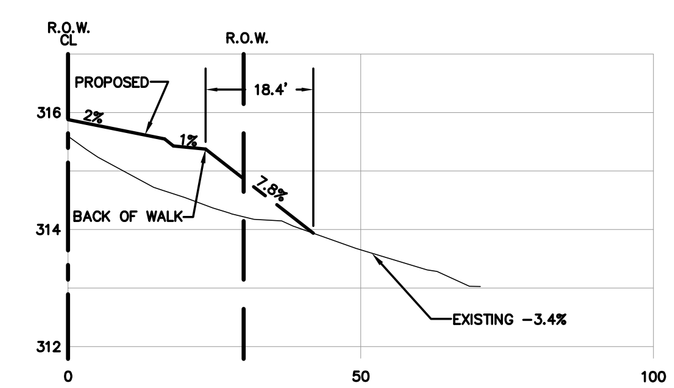

MATCHES ALONG DRIVEWAY
STATION 35+68, RT

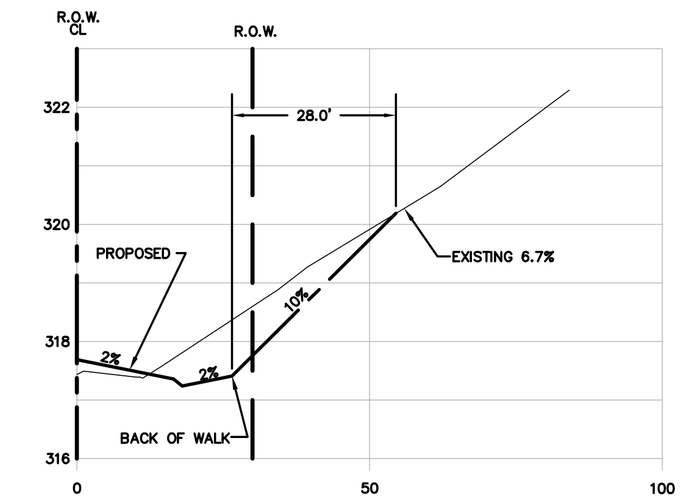

MATCHES ALONG DRIVEWAY
STATION 36+28, LT

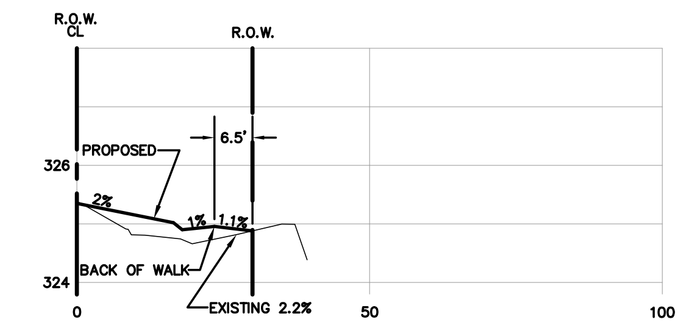

MATCHES ALONG DRIVEWAY
STATION 38+14, RT

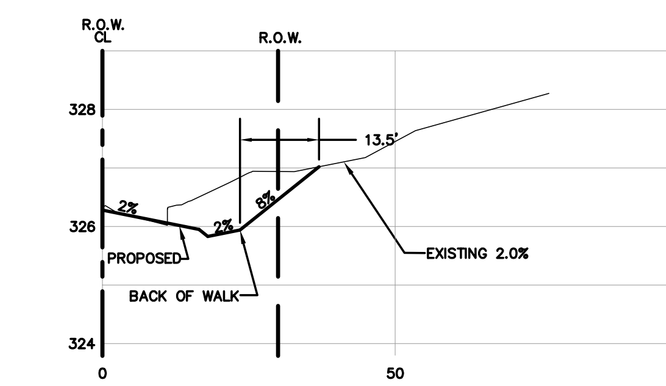

MATCHES ALONG DRIVEWAY
STATION 38+37, LT

00616-037 4/17/17 KJ

LUIS PONCE
STATE OF WASHINGTON
38378
REGISTERED
PROFESSIONAL ENGINEER
1/5/17

1/05/17 AS-BUILT	DESIGNED BY LP DRAWN BY ARS CHECKED BY LP	R&E REICHHARDT & EBE ENGINEERING, INC. CONSULTING ENGINEERS PO Box 978 423 Front St., Ste 201 Lynden, Washington 98264 Ph (360) 354-3687 Fax (360) 354-0407	NO. / DATE / REVISION / BY	CITY OF FERNDALE 2095 MAIN STREET FERNDALE, WA 98248	CHURCH ROAD STREET IMPROVEMENTS DRIVEWAY PROFILES	JOB# / DWG 07037 DWY-INT SCALE H:1"=20' V:N/A	DATE 1-5-17 SHEET 37 of 64

P:\Projects\07037\dwg\CD AS BUILT-CONSTRUCTION\Plan Sheets\AB 07037 DWY-INT-CONST.dwg, 3/17/2017 1:39:01 PM

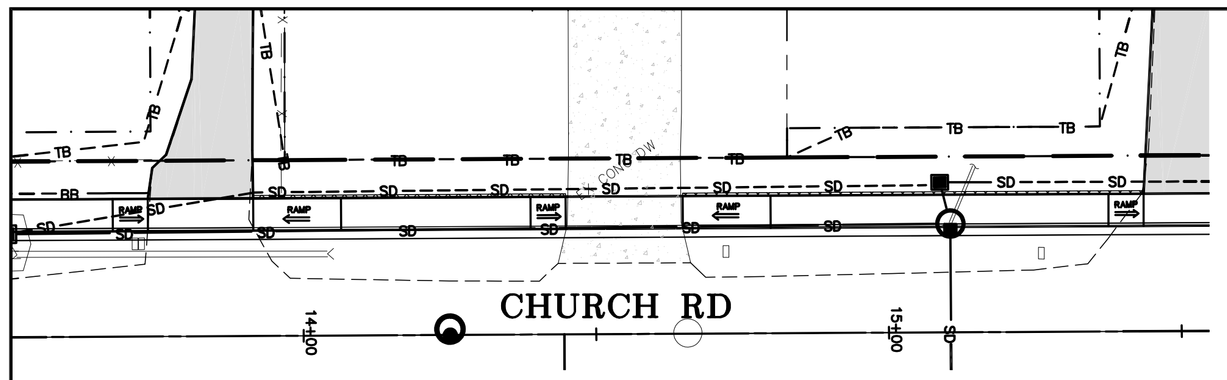

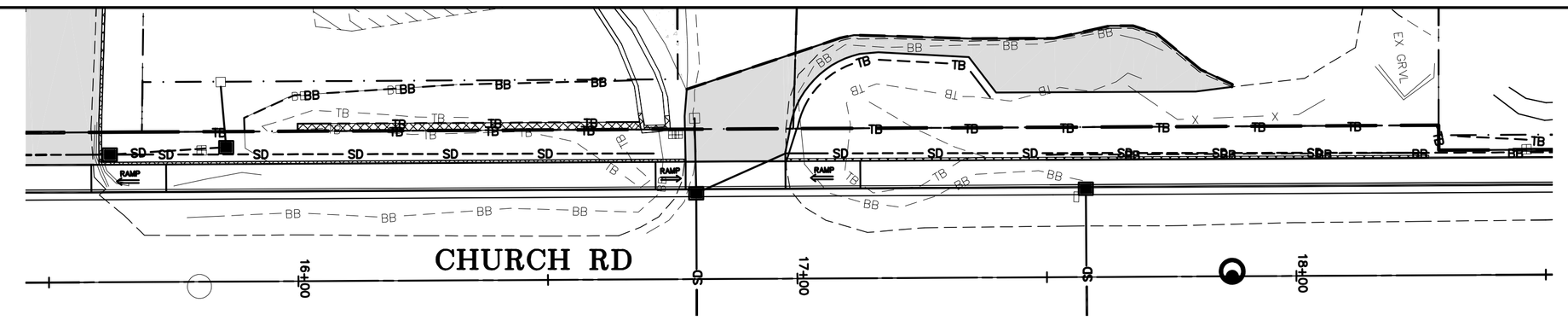

GRAPHIC SCALE

20 0 10 20

(IN FEET)
1 inch = 20 ft. H
1 inch = 2 ft. V

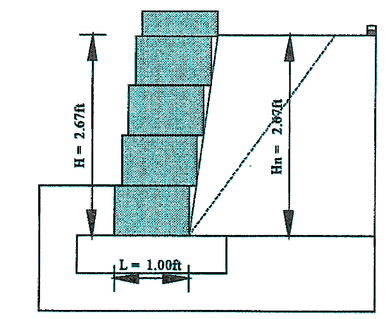

GRAVITY BLOCK WALL
(COMPAC UNIT)
STA. 15+89.41 TO 16+74.75 (LT)

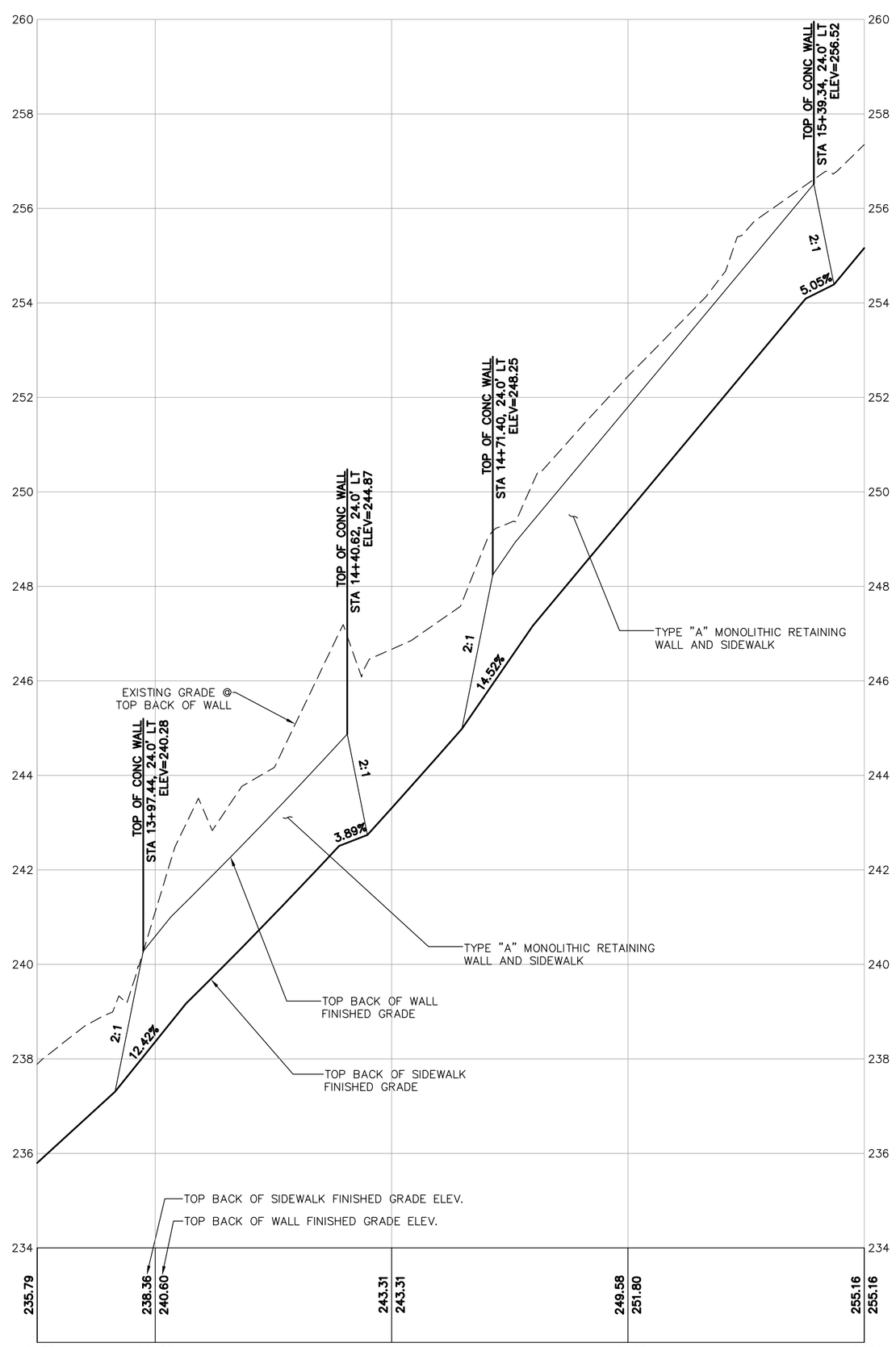

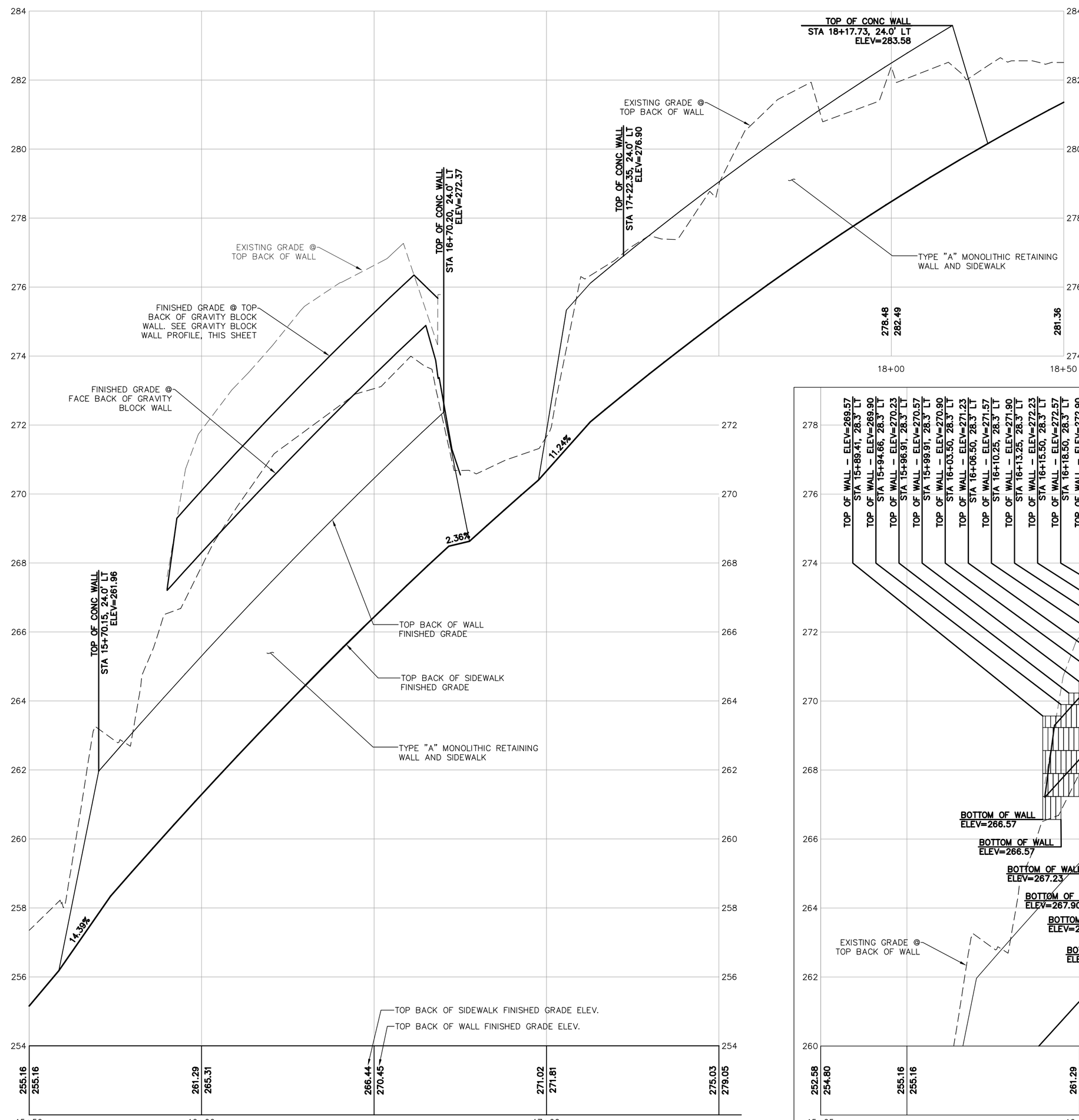

GRAVITY BLOCK WALL PROFILE

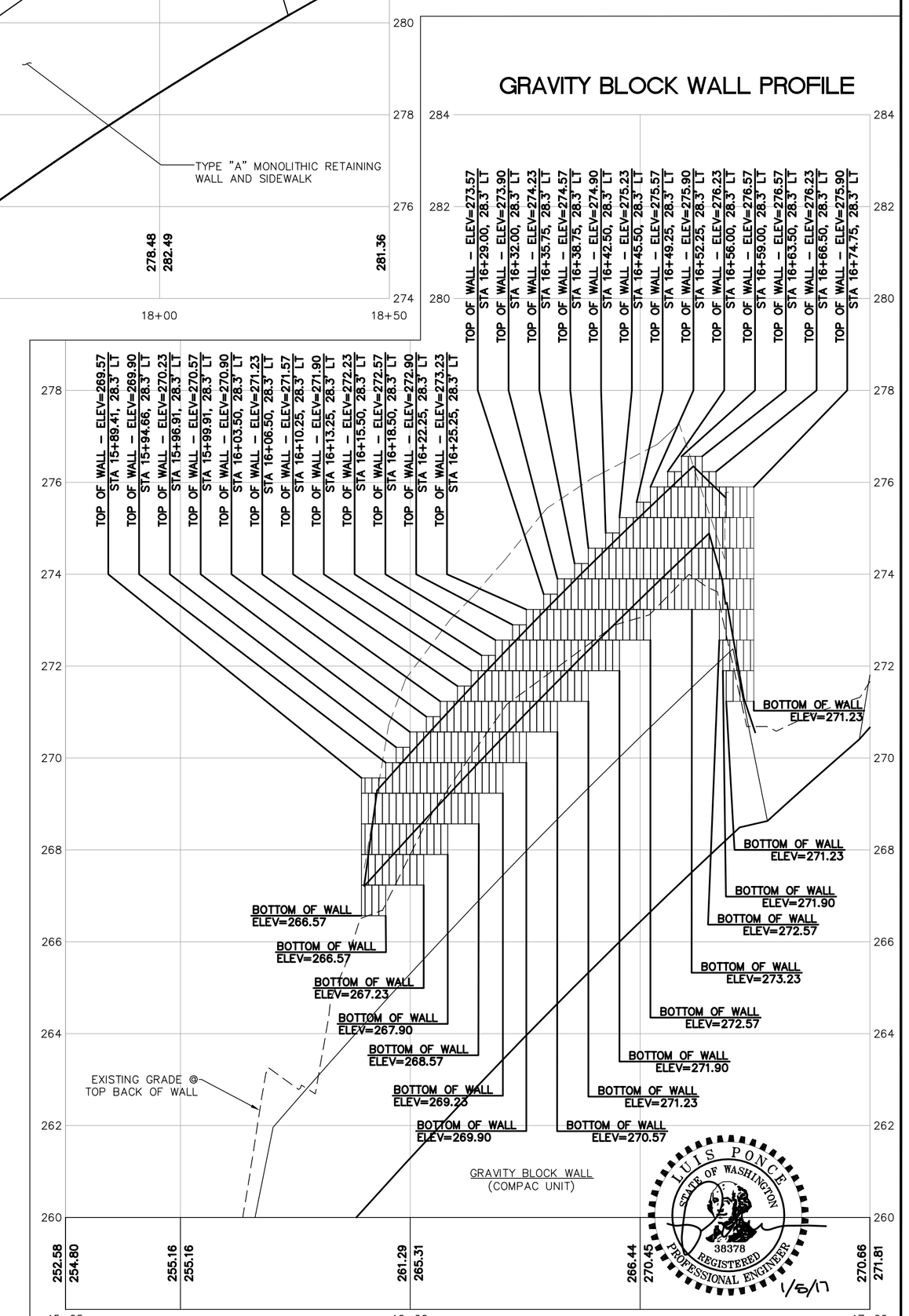

LUIS PONCE
STATE OF WASHINGTON
38378
REGISTERED PROFESSIONAL ENGINEER
1/5/17

00616.038 4/17/17 KJ

1/05/17 **AS-BUILT**

DESIGNED BY	LP/GKG
DRAWN BY	LMC
CHECKED BY	LP

R&E

REICHHARDT & EBE
ENGINEERING, INC.
CONSULTING ENGINEERS
PO Box 978 423 Front St., Ste 201 Lynden, Washington 98264
Ph (360) 354-3687 Fax (360) 354-0407

NO.	DATE	REVISION	BY

CITY OF FERNDALE
2095 MAIN STREET
FERNDALE, WA 98248

CHURCH ROAD
STREET IMPROVEMENTS
WALL PLAN AND PROFILE

JOB# / DWG		DATE
07037	WALL	1-5-17
SCALE		SHEET
H: 1"=20'	V: 1"=2'	38 of 64

P:\Projects\07037\dwg\CD\AS BUILT-CONSTRUCTION\Plan Sheets\All 07037 WALL-CONST.dwg, 3/17/2017 1:42:57 PM

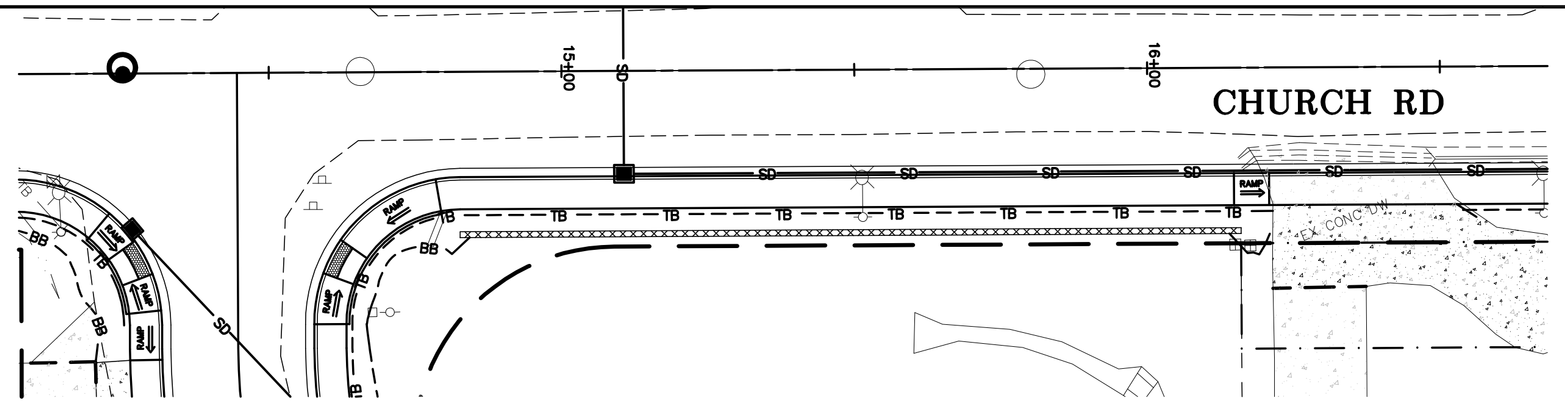

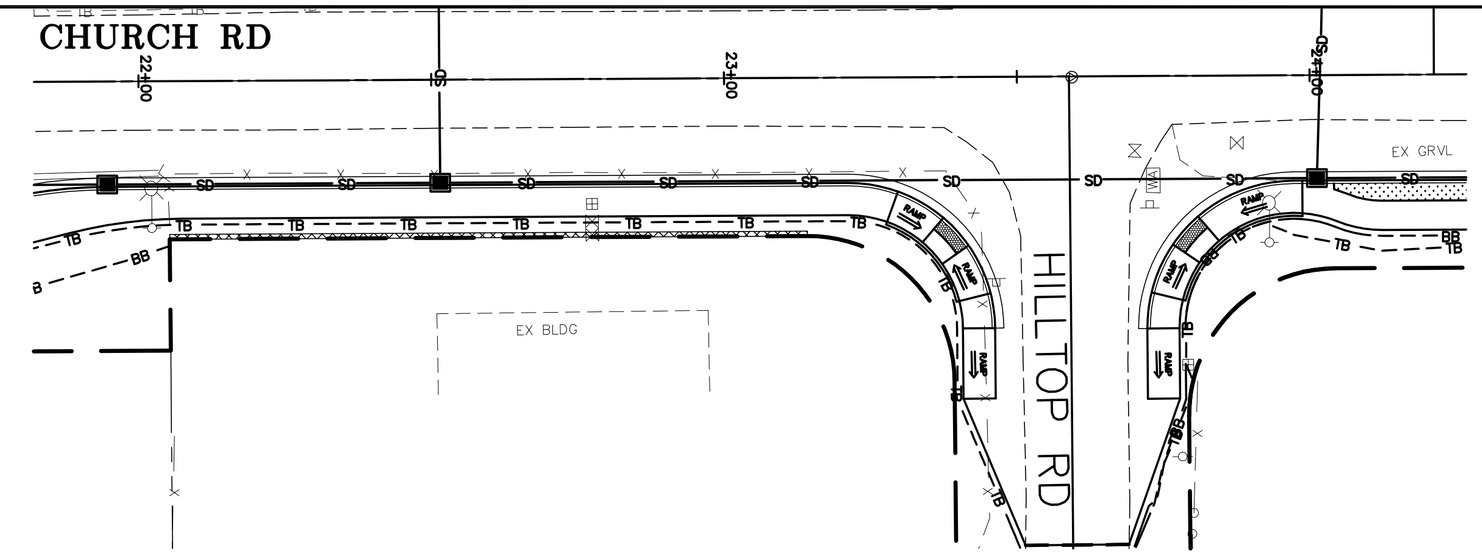

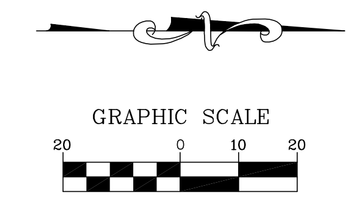

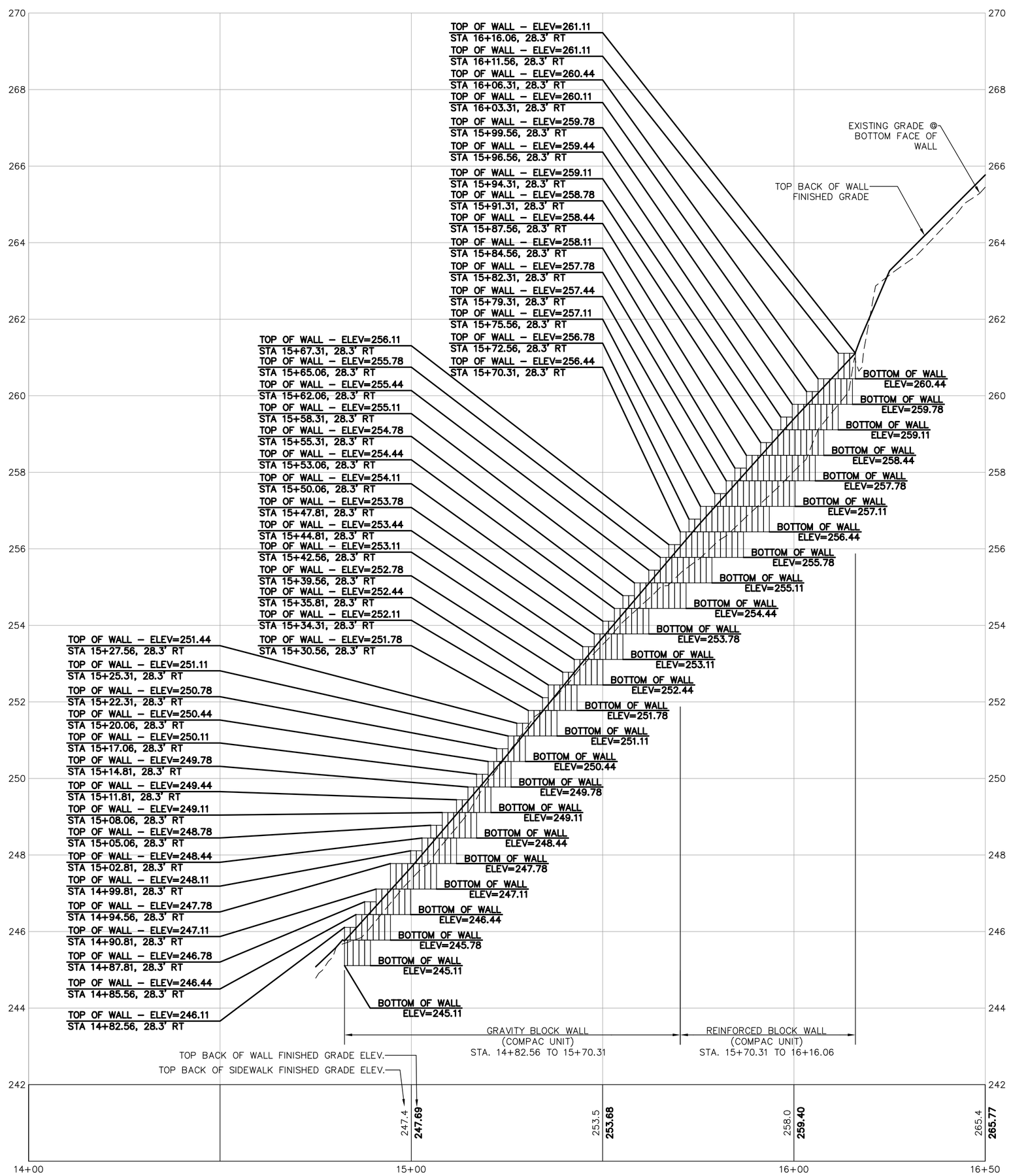

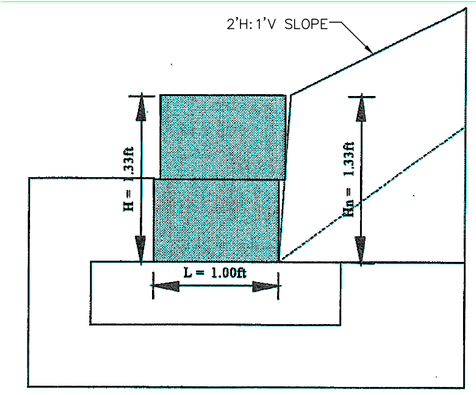

GRAVITY BLOCK WALL
(COMPAC UNIT)
STA. 14+82.56 TO 15+70.31 (RT)

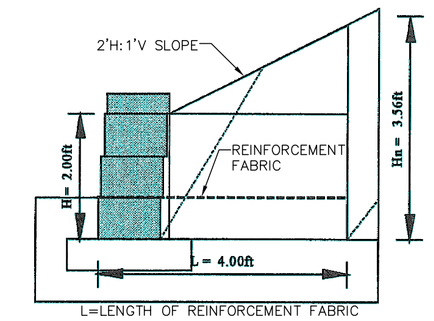

REINFORCED BLOCK WALL
(COMPAC UNIT)
STA. 15+70.31 TO 16+16.06 (RT)

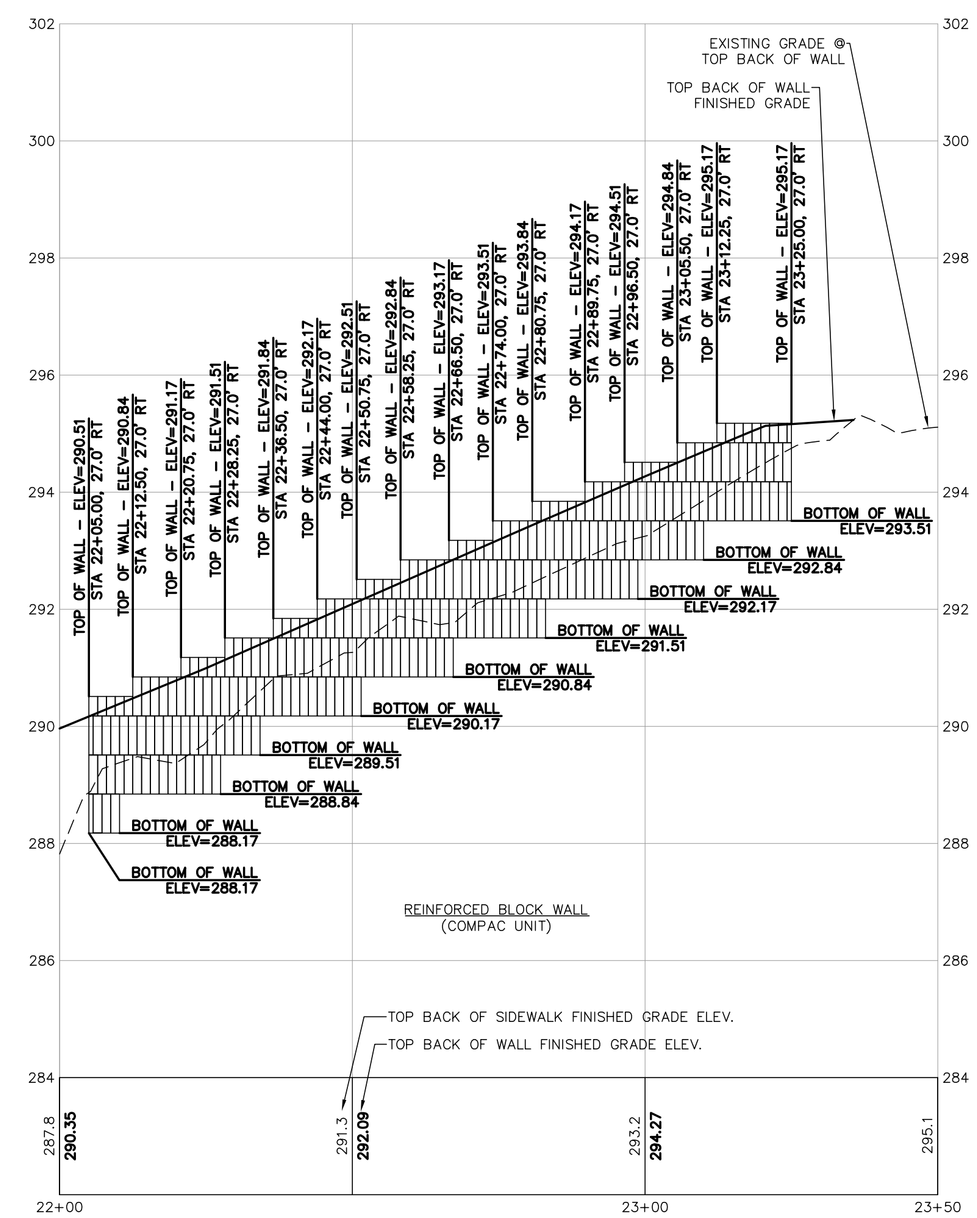

00616.039 4/17/17 KJ

1/05/17 AS-BUILT	DESIGNED BY LP/GKG DRAWN BY LMC CHECKED BY LP	R&E REICHHARDT & EBE ENGINEERING, INC. CONSULTING ENGINEERS PO Box 978 423 Front St., Ste 201 Lynden, Washington 98264 Ph (360) 354-3687 Fax (360) 354-0407	NO. / DATE / REVISION / BY	CITY OF FERNDALE 2095 MAIN STREET FERNDALE, WA 98248	CHURCH ROAD STREET IMPROVEMENTS WALL PLAN AND PROFILE	JOB# / DWG 07037 WALL SCALE H:1"=20' V:1"=2'	DATE 1-5-17 SHEET 39 of 64

P:\Projects\07037\dwg\CD AS BUILT-CONSTRUCTION\Plan Sheets\AB 07037 WALL-CONST.dwg, 3/17/2017 1:44:16 PM

GRAPHIC SCALE

20 0 10 20

(IN FEET)
1 inch = 20 ft.

FACE OF CURB			
CURB	RADIUS	LENGTH	Δ
C1	25.00'	41.45'	93°
C2	25.00'	37.09'	85°

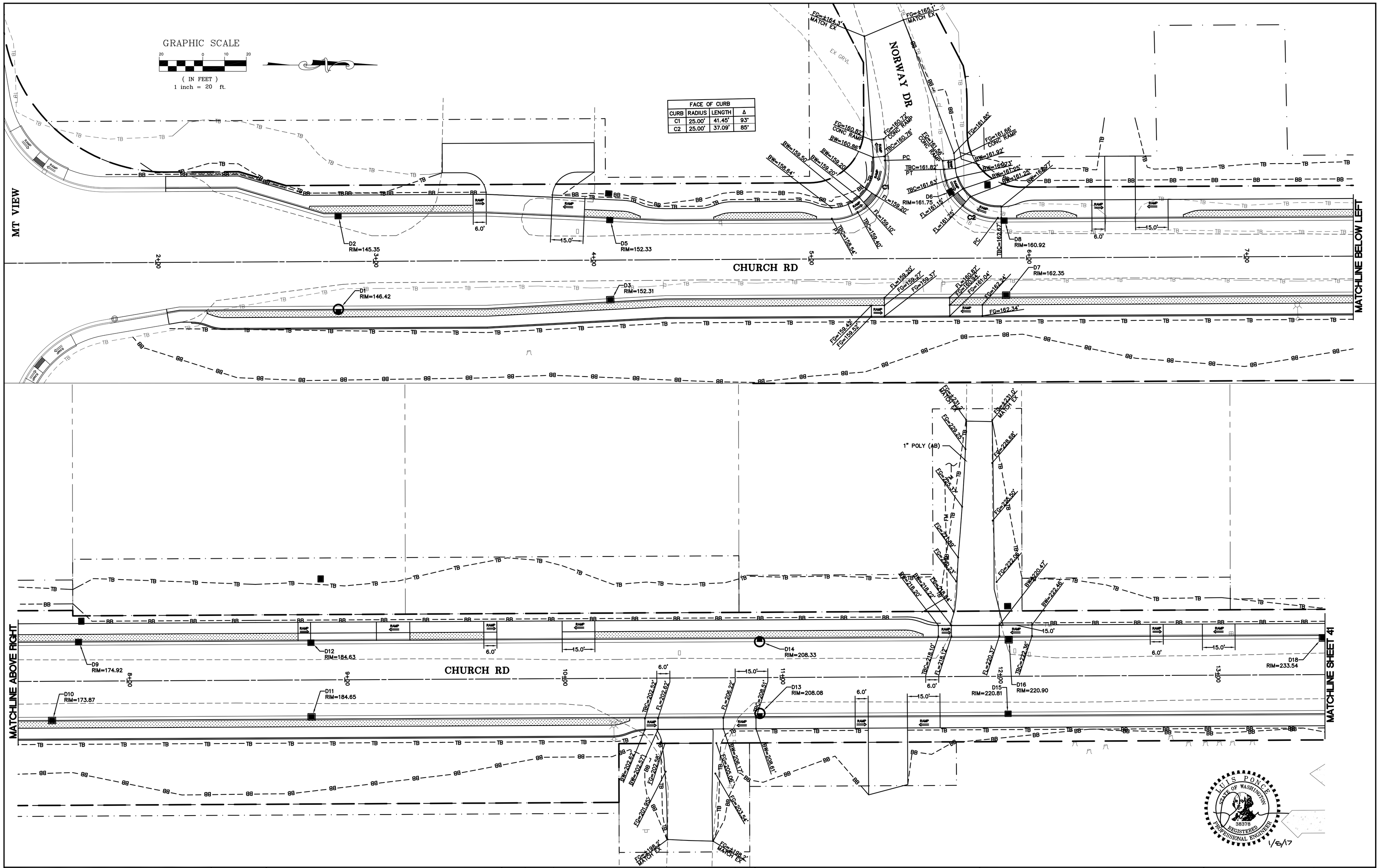

1/05/17 AS-BUILT

DESIGNED BY LP/GKG
DRAWN BY LMC
CHECKED BY LP

R&E REICHHARDT & EBE
ENGINEERING, INC.
CONSULTING ENGINEERS
PO Box 978 423 Front St., Ste 201 Lynden, Washington 98264
Ph (360) 354-3687 Fax (360) 354-0407

NO.	DATE	REVISION	BY

CITY OF FERNDALE
2095 MAIN STREET
FERNDALE, WA 98248

CHURCH ROAD
STREET IMPROVEMENTS
GRADING PLAN

JOB# / DWG 07037 GRADE
SCALE H: 1"=20' V: N/A
DATE 1-5-17
SHEET 40 of 64

0616.040 4/17/17 KJ

P:\Projects\07037\dwg\CD AS BUILT-CONSTRUCTION\Plan Sheets\AB 07037 GRADE-CONST.dwg, 3/17/2017 1:46:37 PM

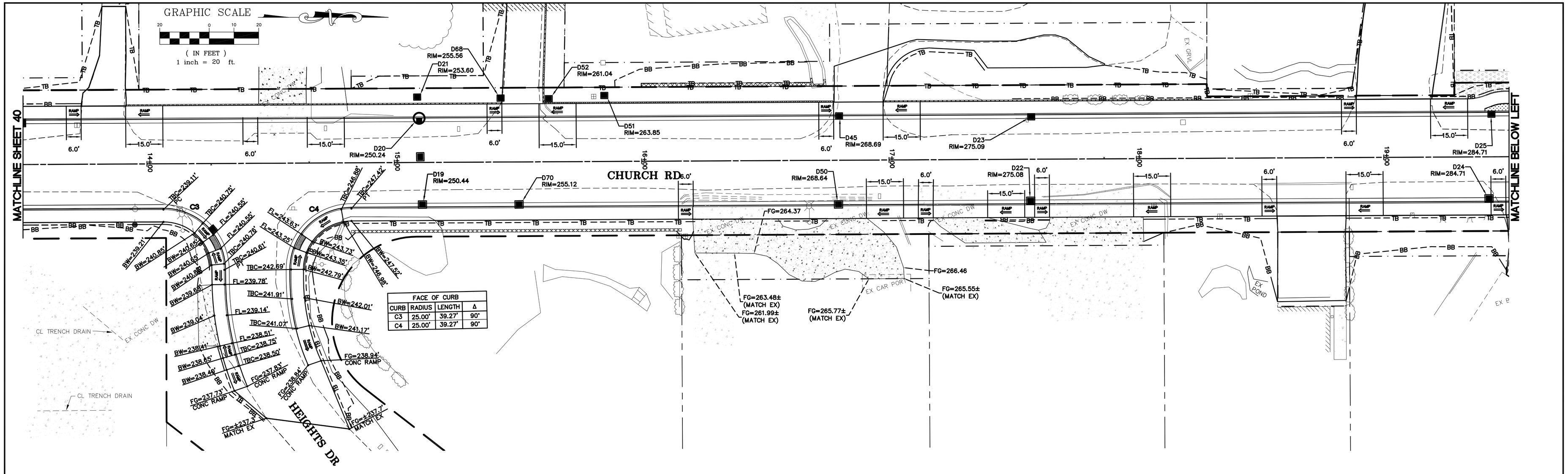

FACE OF CURB			
CURB	RADIUS	LENGTH	Δ
C3	25.00'	39.27'	90°
C4	25.00'	39.27'	90°

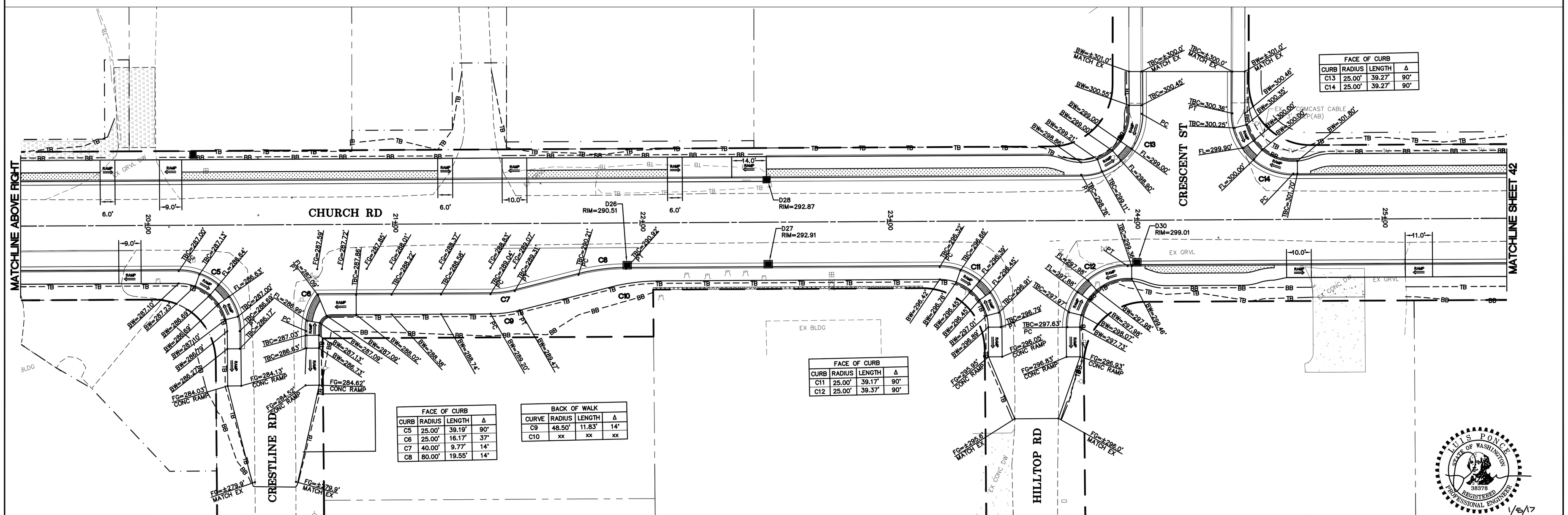

FACE OF CURB			
CURB	RADIUS	LENGTH	Δ
C13	25.00'	39.27'	90°
C14	25.00'	39.27'	90°

FACE OF CURB			
CURB	RADIUS	LENGTH	Δ
C5	25.00'	39.19'	90°
C6	25.00'	16.17'	37°
C7	40.00'	9.77'	14°
C8	80.00'	19.55'	14°

BACK OF WALK			
CURVE	RADIUS	LENGTH	Δ
C9	48.50'	11.83'	14°
C10	xx	xx	xx

FACE OF CURB			
CURB	RADIUS	LENGTH	Δ
C11	25.00'	39.17'	90°
C12	25.00'	39.37'	90°

LUIS PONCE
STATE OF WASHINGTON
38378
REGISTERED PROFESSIONAL ENGINEER
1/5/17

00616.041 4/17/17 KJ

1/05/17 **AS-BUILT**

DESIGNED BY LP/GKG
DRAWN BY LMC
CHECKED BY LP

R&E
REICHHARDT & EBE
ENGINEERING, INC.
CONSULTING ENGINEERS
PO Box 978 423 Front St., Ste 201 Lynden, Washington 98264
Ph (360) 354-3687 Fax (360) 354-0407

NO.	DATE	REVISION	BY

CITY OF FERNDALE
2095 MAIN STREET
FERNDALE, WA 98248

CHURCH ROAD
STREET IMPROVEMENTS
GRADING PLAN

JOB# / DWG: 07037 GRADE
DATE: 1-5-17
SCALE: H: 1"=20' V: N/A
SHEET: 41 of 64

P:\Projects\07037\dwg\CD AS BUILT-CONSTRUCTION\Plan Sheets\AB 07037 GRADE-CONST.dwg, 3/21/2017 9:17:09 AM

GRAPHIC SCALE

20 0 10 20

(IN FEET)
1 inch = 20 ft.

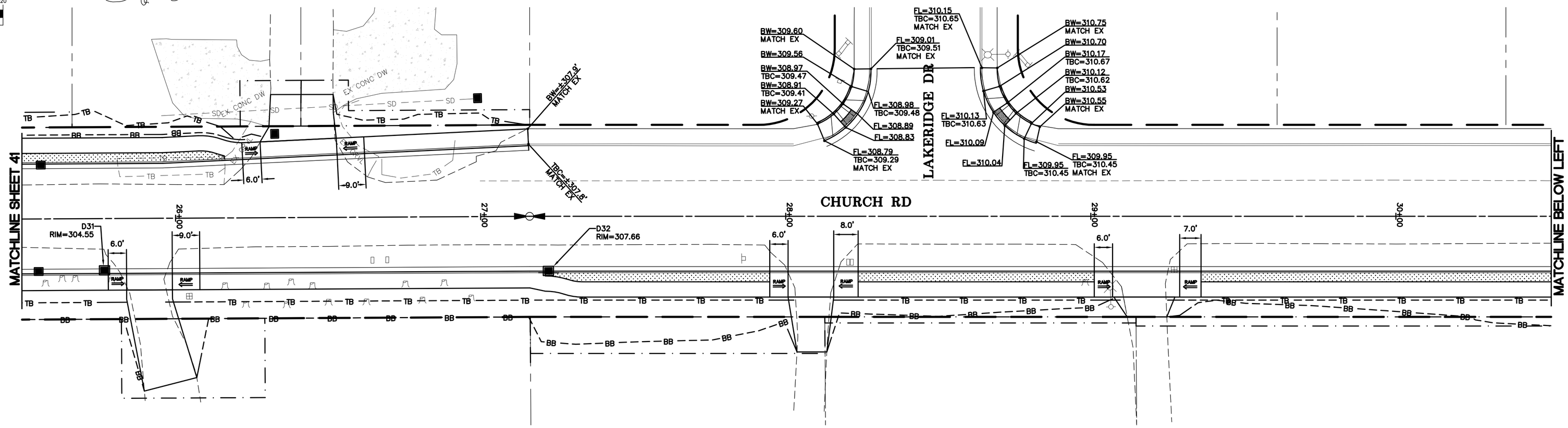

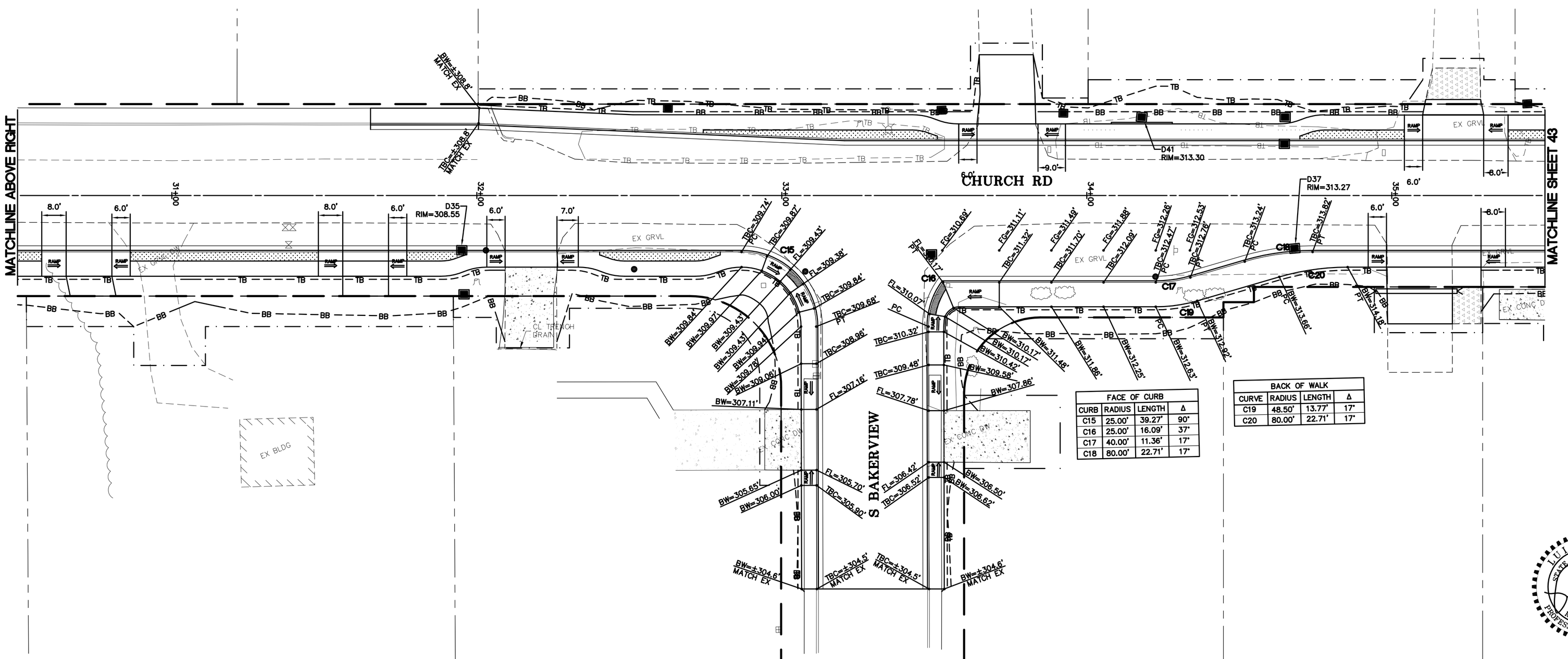

FACE OF CURB			
CURB	RADIUS	LENGTH	Δ
C15	25.00'	39.27'	90°
C16	25.00'	16.09'	37°
C17	40.00'	11.36'	17°
C18	80.00'	22.71'	17°

BACK OF WALK			
CURVE	RADIUS	LENGTH	Δ
C19	48.50'	13.77'	17°
C20	80.00'	22.71'	17°

LUIS PONCE
STATE OF WASHINGTON
38378
REGISTERED
PROFESSIONAL ENGINEER
1/5/17

00616.042 4/17/17 KJ

1/05/17 AS-BUILT

DESIGNED BY LP/GKG
DRAWN BY LMC
CHECKED BY LP

R&E
REICHHARDT & EBE
ENGINEERING, INC.
CONSULTING ENGINEERS
PO Box 978 423 Front St., Ste 201 Lynden, Washington 98264
Ph (360) 354-3687 Fax (360) 354-0407

NO.	DATE	REVISION	BY

CITY OF FERNDALE
2095 MAIN STREET
FERNDALE, WA 98248

CHURCH ROAD
STREET IMPROVEMENTS
GRADING PLAN

JOB# / DWG 07037 GRADE
DATE 1-5-17
SCALE H: 1"=20' V: N/A
SHEET 42 of 64

P:\Projects\07037\dwg\CD\AS BUILT-CONSTRUCTION\Plan Sheets\AB 07037 GRADE-CONST.dwg, 3/17/2017 1:47:28 PM

GRAPHIC SCALE

20 0 10 20

(IN FEET)
1 inch = 20 ft.

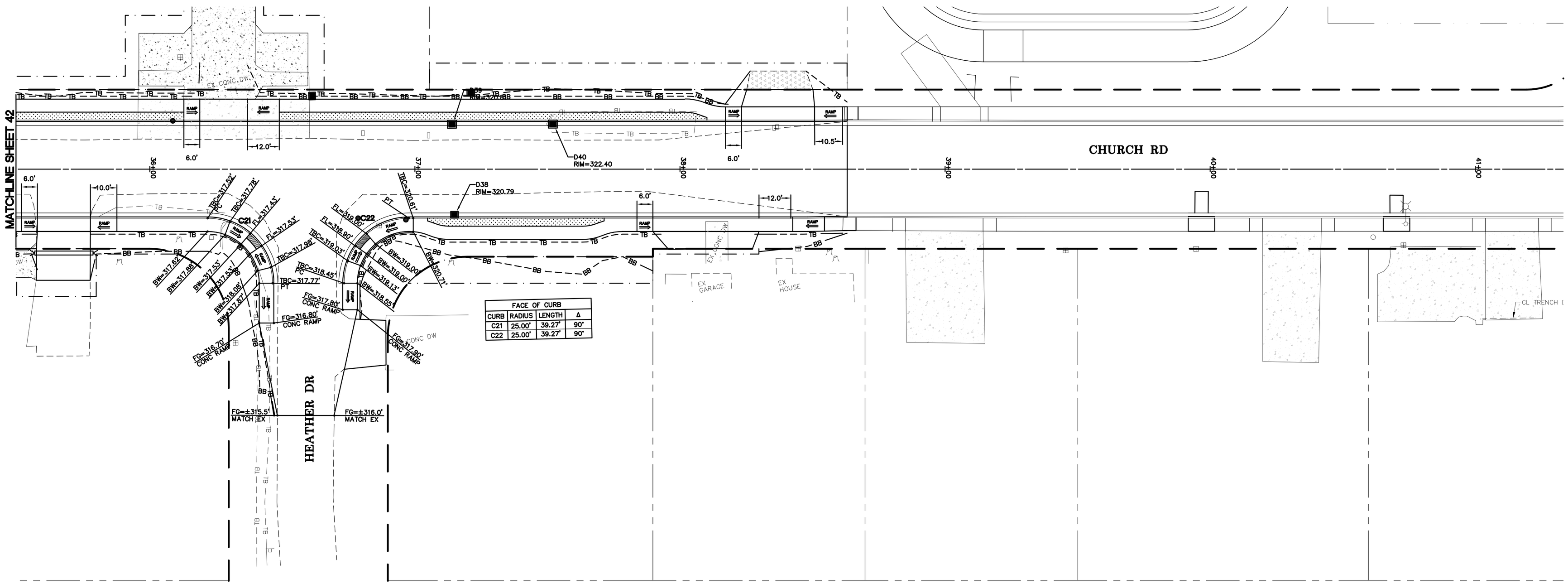

00616.043 4/17/17 KJ

LUIS PONCE
STATE OF WASHINGTON
38378
REGISTERED
PROFESSIONAL ENGINEER
1/6/17

1/05/17 AS-BUILT	DESIGNED BY LP/GKG DRAWN BY LMC CHECKED BY LP	REICHHARDT & EBE ENGINEERING, INC. CONSULTING ENGINEERS PO Box 978 423 Front St., Ste 201 Lynden, Washington 98264 Ph (360) 354-3687 Fax (360) 354-0407	NO. / DATE / REVISION / BY	CITY OF FERNDALE 2095 MAIN STREET FERNDALE, WA 98248	CHURCH ROAD STREET IMPROVEMENTS GRADING PLAN	JOB# / DWG 07037 GRADE SCALE H: 1"=20' V: N/A DATE 1-5-17 SHEET 43 of 64

P:\Projects\07037\dwg\CD\ AS BUILT-CONSTRUCTION\Plan Sheets\A8 07037-GRADE-CONST.dwg, 3/17/2017 1:47:51 PM

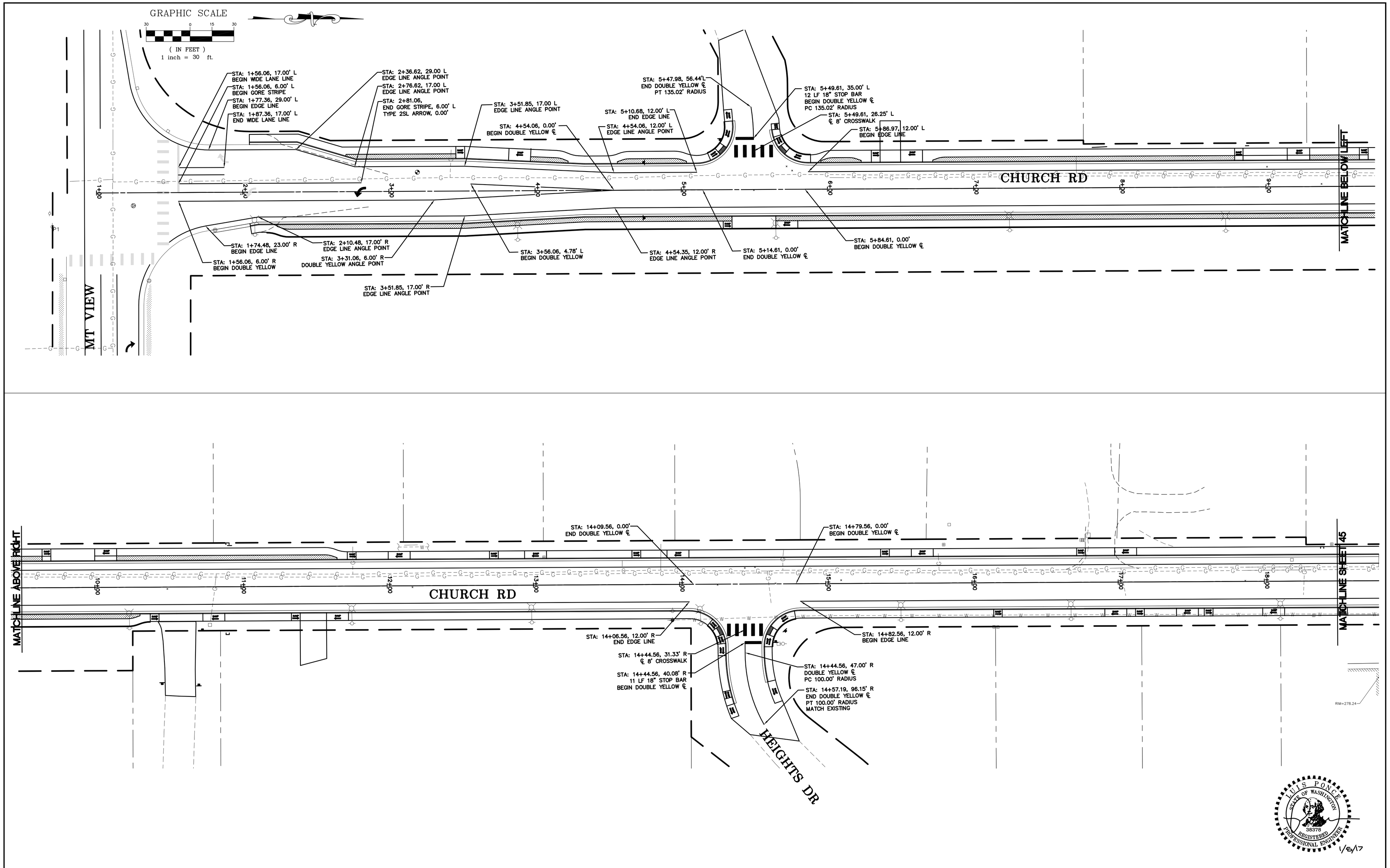

00616.044 4/17/17 KJ

1/05/17 **AS-BUILT**

DESIGNED BY LP/GKG
DRAWN BY LMC
CHECKED BY LP

R&E

REICHHARDT & EBE
ENGINEERING, INC.
CONSULTING ENGINEERS
PO Box 978 423 Front St., Ste 201 Lynden, Washington 98264
Ph (360) 354-3687 Fax (360) 354-0407

NO.	DATE	REVISION	BY

CITY OF FERNDALE
2095 MAIN STREET
FERNDALE, WA 98248

CHURCH ROAD
STREET IMPROVEMENTS
CHANNELIZATION PLAN

JOB# / DWG: 07037 CHAN
DATE: 1-5-17
SCALE: H: 1"=30' V: N/A
SHEET: 44 of 64

P:\Projects\07037\dwg\CD\ AS BUILT-CONSTRUCTION\Plan Sheets\AB 07037 CHAN-CONST.dwg, 3/21/2017 9:21:46 AM

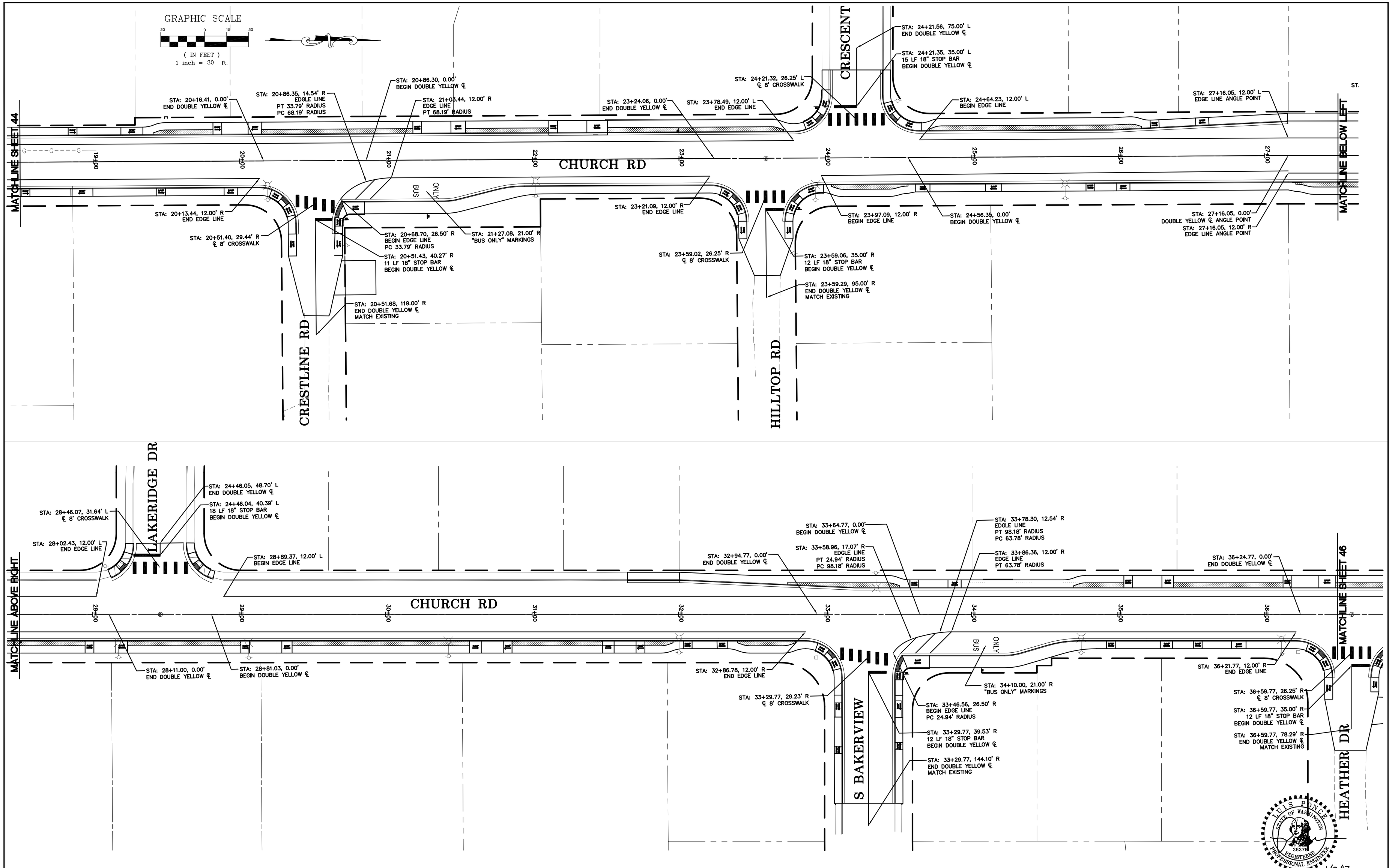

00616.042 4/17/17 KJ

1/05/17 AS-BUILT

DESIGNED BY	LP/GKG
DRAWN BY	LMC
CHECKED BY	LP

R&E
REICHHARDT & EBE
ENGINEERING, INC.
CONSULTING ENGINEERS
PO Box 978 423 Front St., Ste 201 Lynden, Washington 98264
Ph (360) 354-3687 Fax (360) 354-0407

NO.	DATE	REVISION	BY

CITY OF FERNDALE
2095 MAIN STREET
FERNDALE, WA 98248

CHURCH ROAD
STREET IMPROVEMENTS
CHANNELIZATION PLAN

JOB# / DWG	DATE
07037 CHAN	1-5-17
SCALE H: 1"=30' V: N/A	SHEET 45 of 64

P:\Projects\07037\dwg\CD AS BUILT-CONSTRUCTION\Plan Sheets\AB 07037 CHAN-CONST.dwg, 3/17/2017 12:50:07 PM

GRAPHIC SCALE

30 0 15 30

(IN FEET)
1 inch = 30 ft.

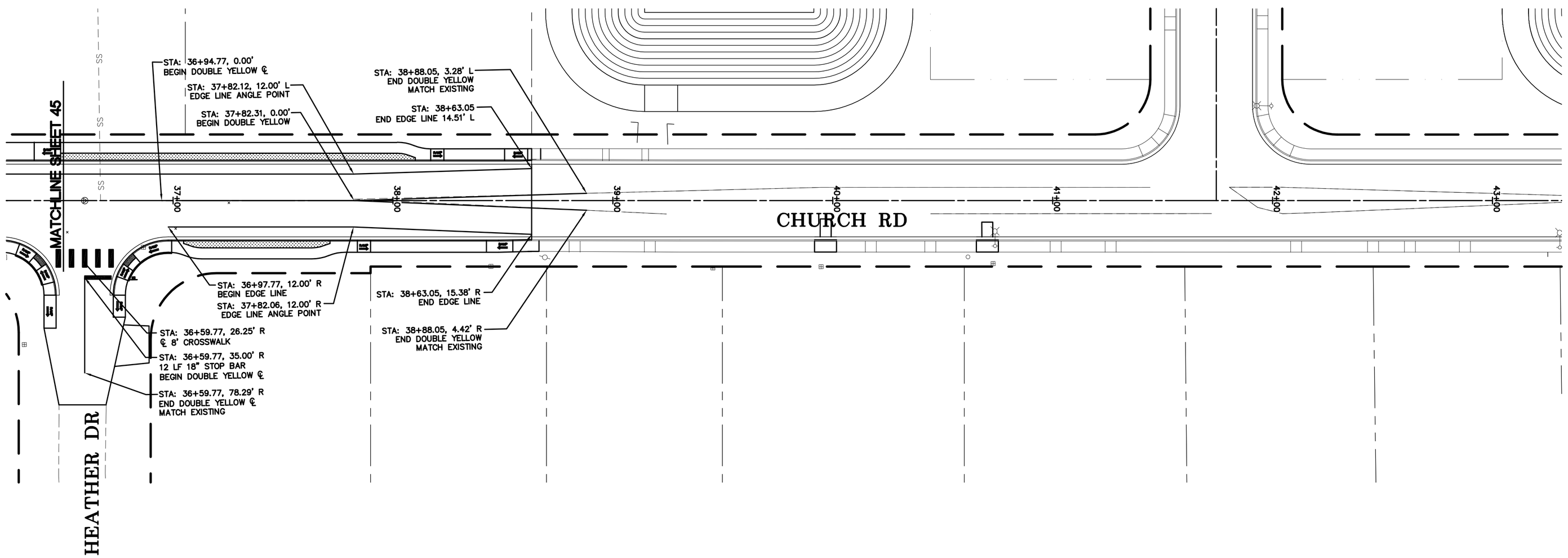

LUIS PONCE
STATE OF WASHINGTON
38378
REGISTERED
PROFESSIONAL ENGINEER
1/6/17

00616.046 4/17/17 KJ

1/05/17 AS-BUILT	DESIGNED BY LP/GKG DRAWN BY LMC CHECKED BY LP	R&E REICHHARDT & EBE ENGINEERING, INC. CONSULTING ENGINEERS PO Box 978 423 Front St., Ste 201 Lynden, Washington 98264 Ph (360) 354-3687 Fax (360) 354-0407	NO.	DATE	REVISION	BY	CITY OF FERNDALE 2095 MAIN STREET FERNDALE, WA 98248	CHURCH ROAD STREET IMPROVEMENTS CHANNELIZATION PLAN

JOB# / DWG	DATE
07037 CHAN	1-5-17
SCALE H: 1"=30' V: N/A	SHEET 46 of 64

P:\Projects\07037\dwg\CD AS BUILT-CONSTRUCTION\Plan Sheets\AB 07037 CHAN-CONST.dwg, 3/21/2017 9:30:00 AM

CHURCH RD STA. 2+25

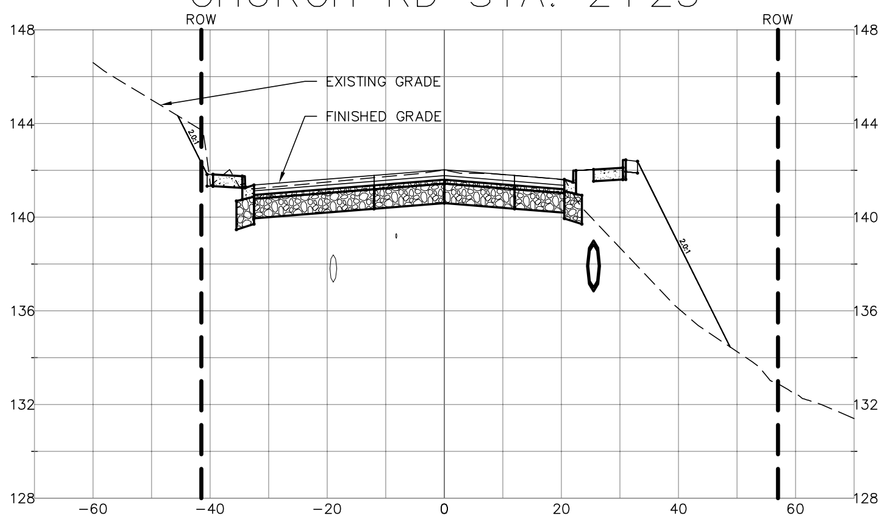

CHURCH RD STA. 3+00

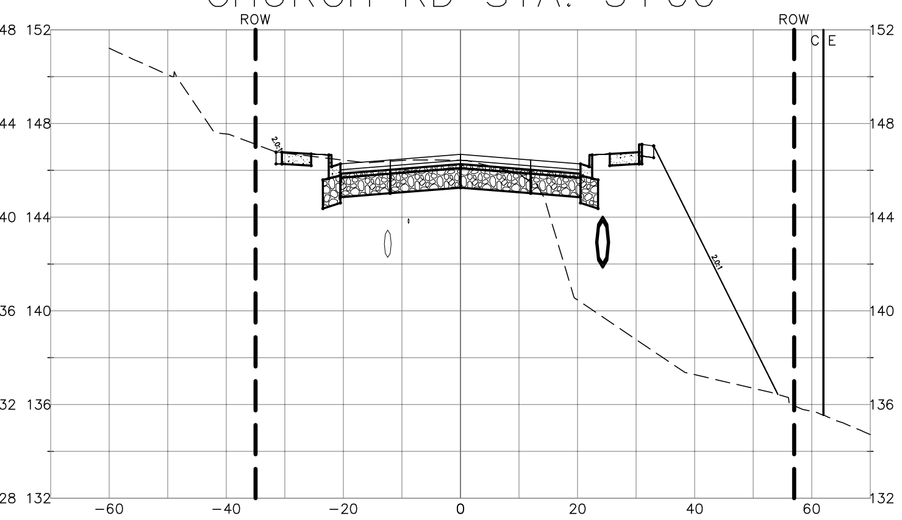

CHURCH RD STA. 3+75

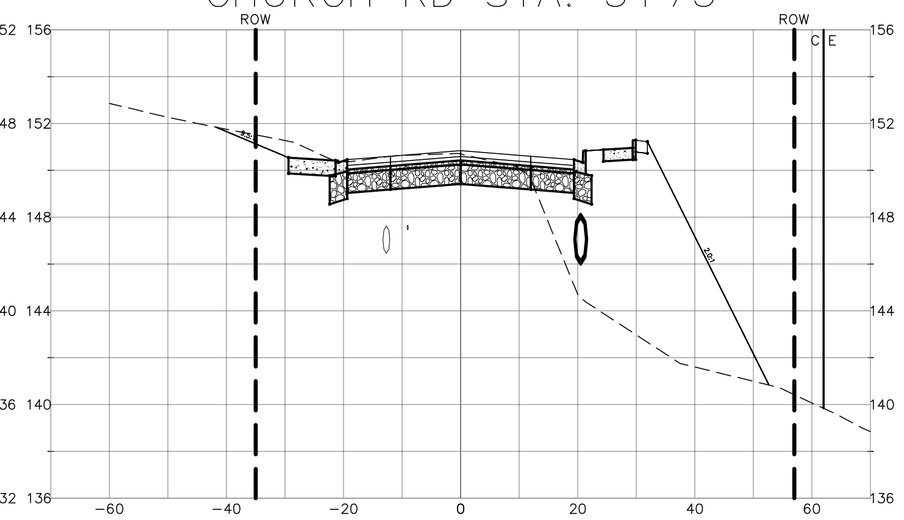

CHURCH RD STA. 4+50

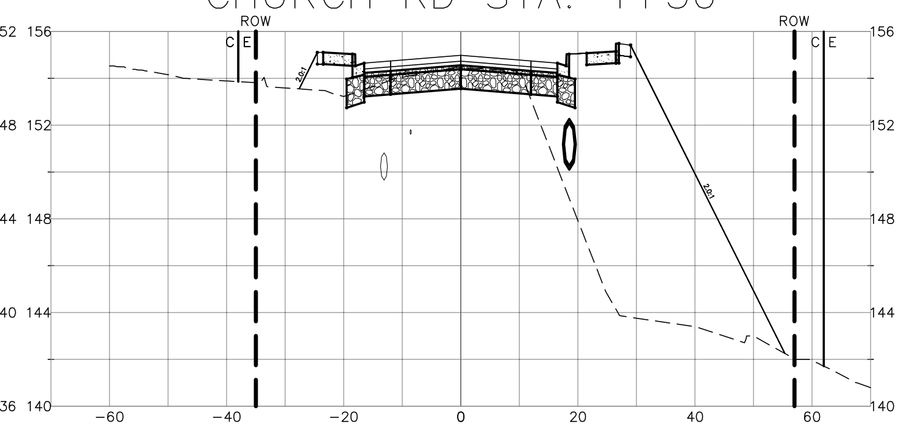

CHURCH RD STA. 2+00

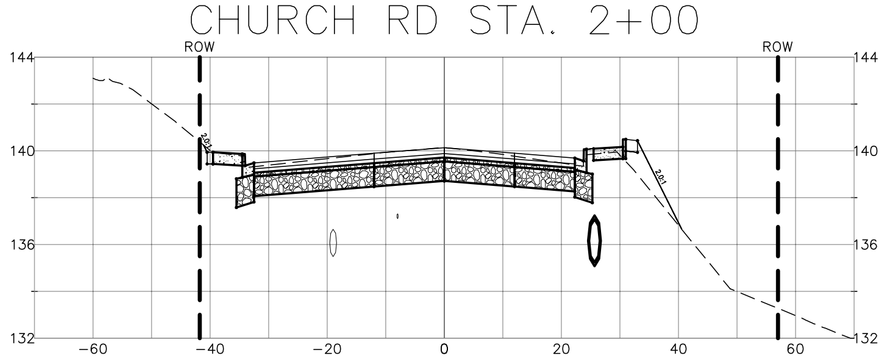

CHURCH RD STA. 2+75

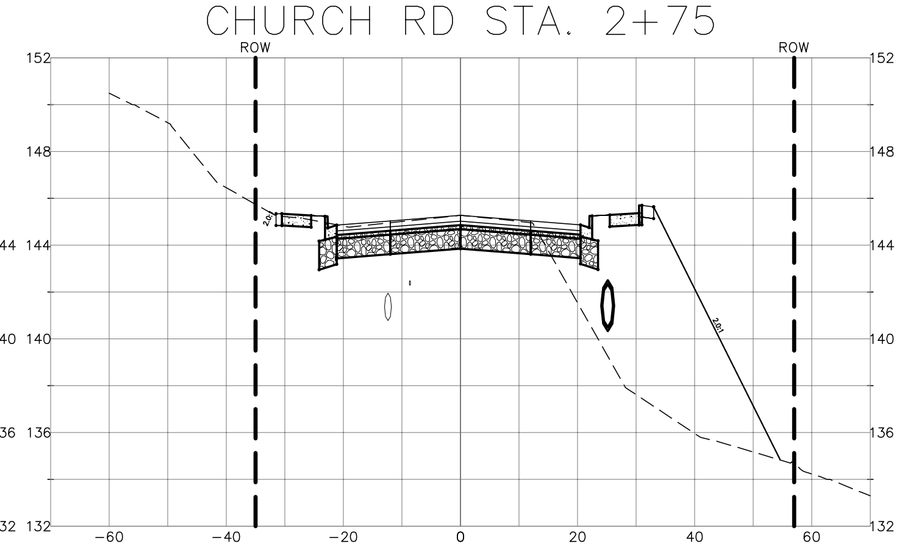

CHURCH RD STA. 3+50

CHURCH RD STA. 4+25

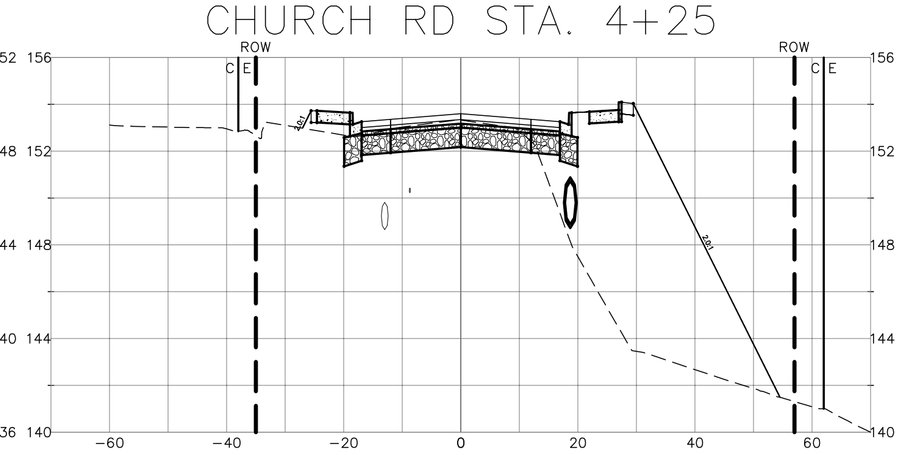

CHURCH RD STA. 1+75

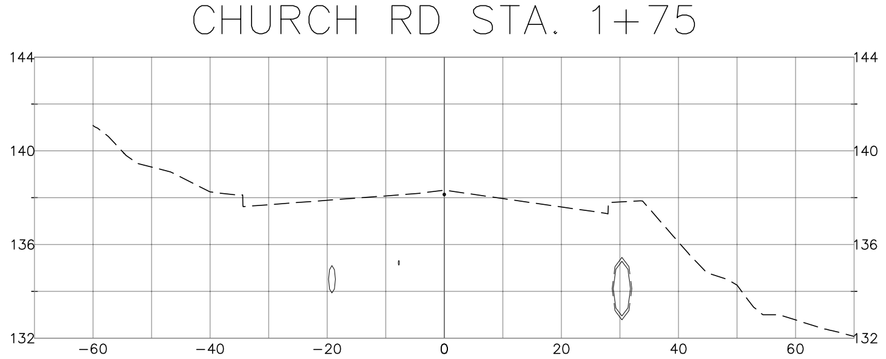

CHURCH RD STA. 2+50

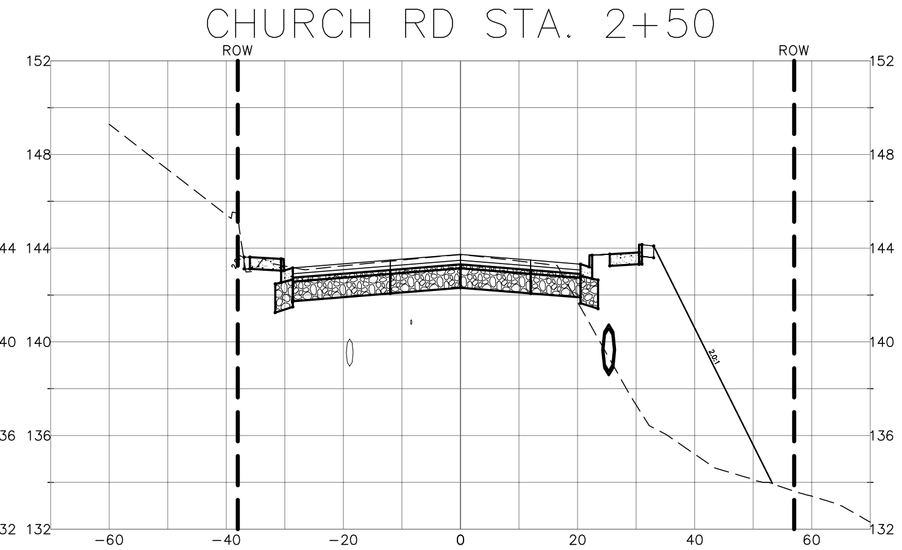

CHURCH RD STA. 3+25

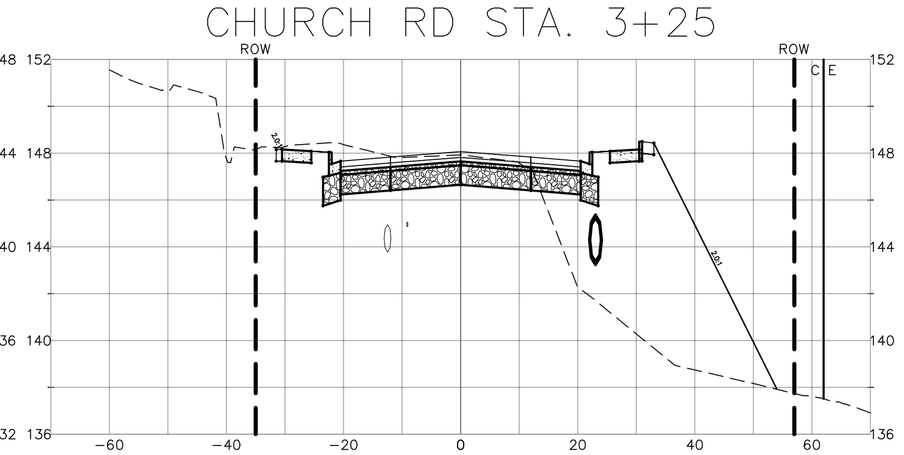

CHURCH RD STA. 4+00

LUIS PONCE
STATE OF WASHINGTON
38378
REGISTERED
PROFESSIONAL ENGINEER
1/6/17

00616.047 4/17/17 KJ

P:\Projects\07037\dwgs\CD AS BUILT-CONSTRUCTION\Plan Sheets\AB07037 Align_profile.dwg, 3/17/2017 1:52:11 PM

1/05/17 AS-BUILT	DESIGNED BY LP/GKG DRAWN BY LMC CHECKED BY LP	R&E REICHHARDT & EBE ENGINEERING, INC. CONSULTING ENGINEERS PO Box 978 423 Front St., Ste 201 Lynden, Washington 98264 Ph (360) 354-3687 Fax (360) 354-0407	NO. / DATE / REVISION / BY	CITY OF FERNDALE 2095 MAIN STREET FERNDALE, WA 98248	CHURCH ROAD STREET IMPROVEMENTS CROSS SECTIONS	JOB# / DWG AB07037 ALIGN_PROFILE SCALE H: 1"=20' V: 1"=5' DATE 1-5-17 SHEET 47 of 64

CHURCH RD STA. 5+00

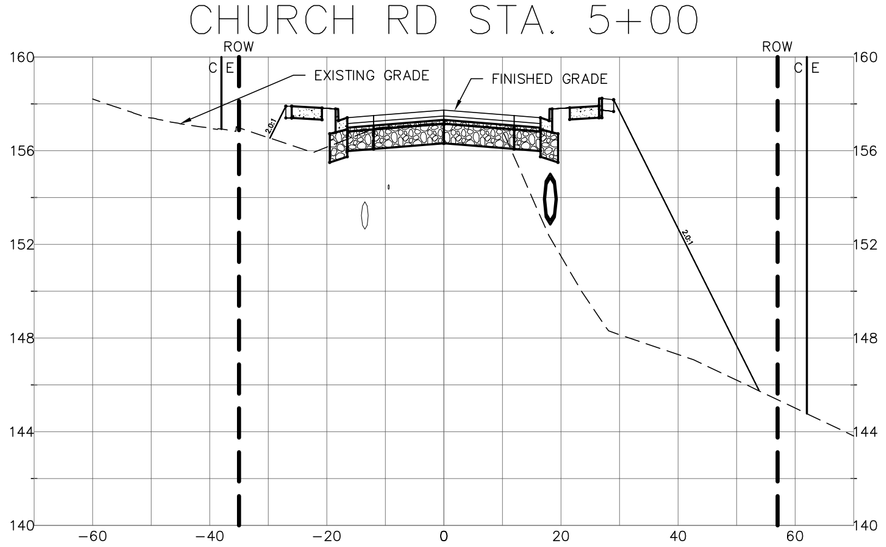

CHURCH RD STA. 5+50

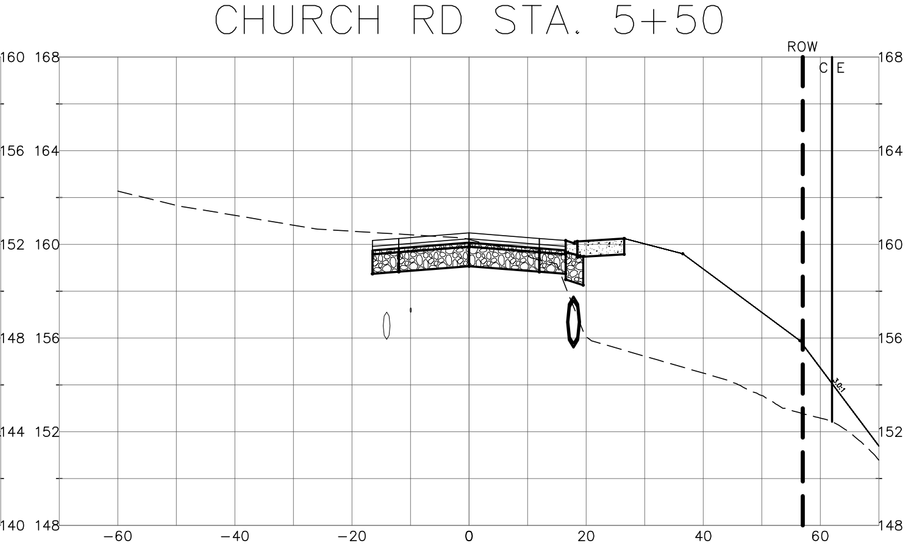

CHURCH RD STA. 6+00

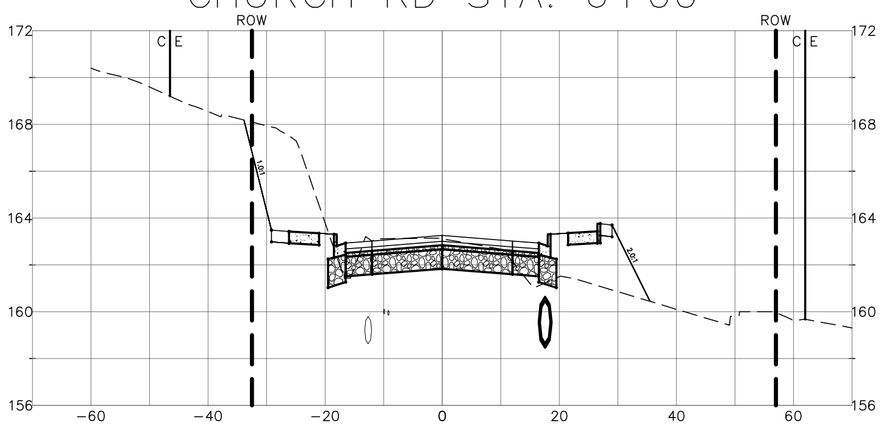

CHURCH RD STA. 6+50

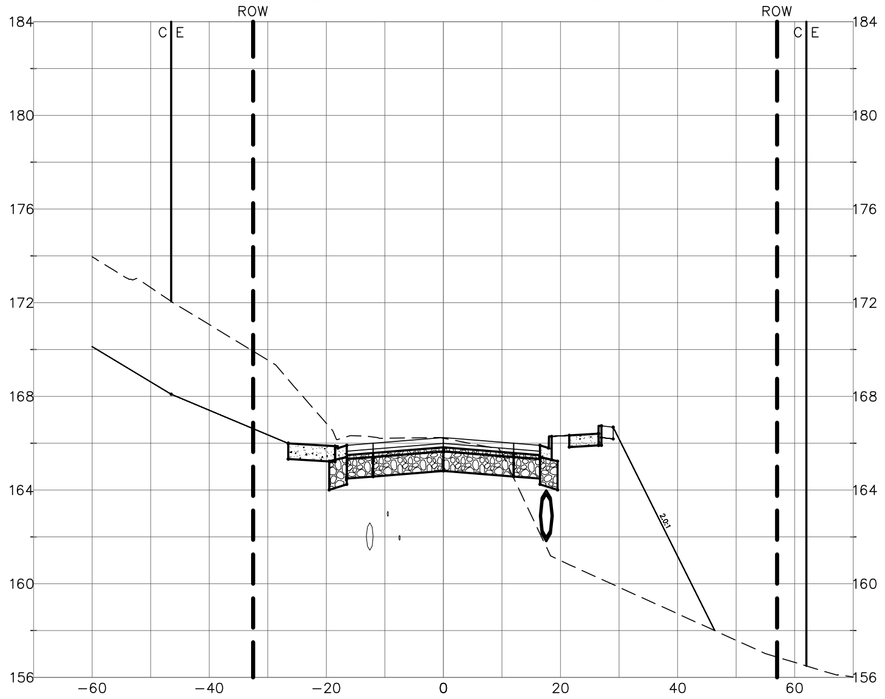

CHURCH RD STA. 4+75

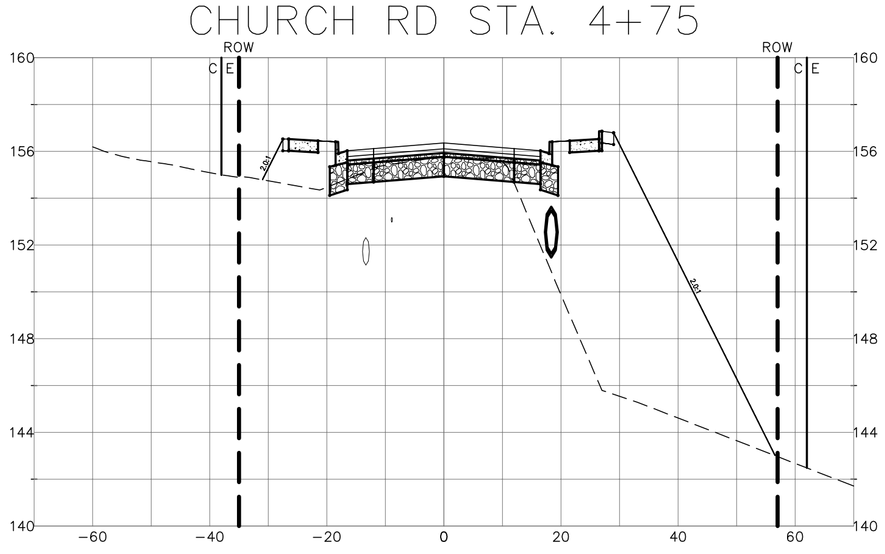

CHURCH RD STA. 5+25

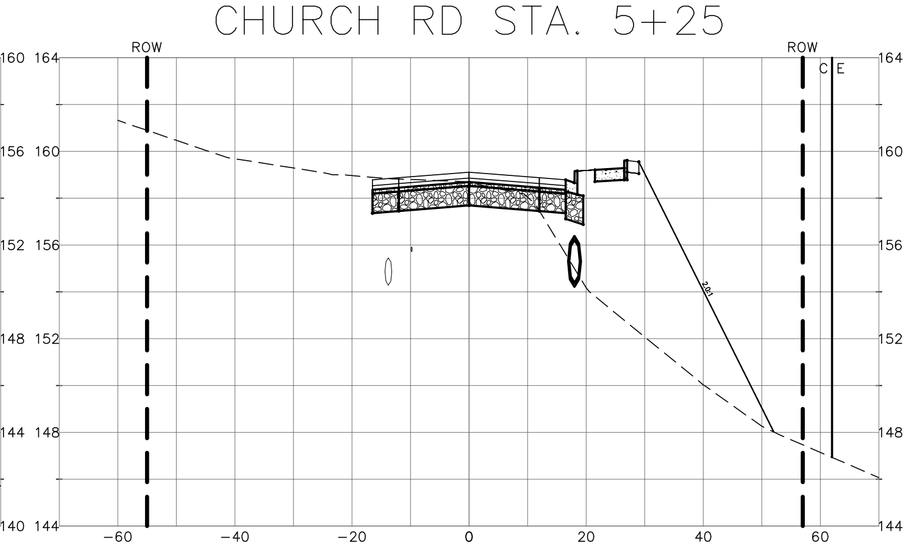

CHURCH RD STA. 5+75

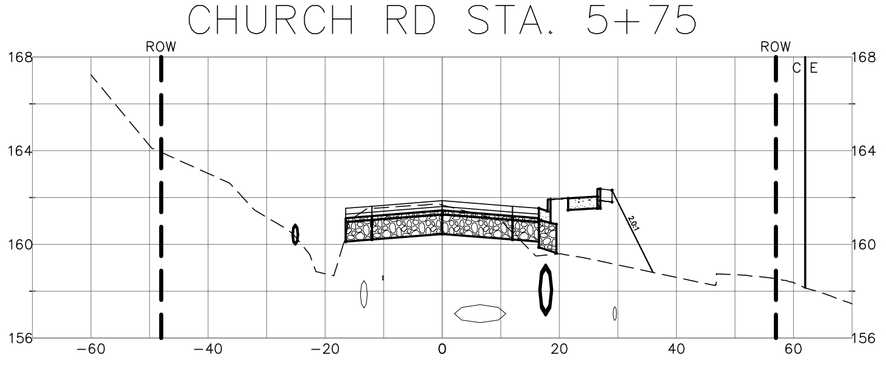

CHURCH RD STA. 6+25

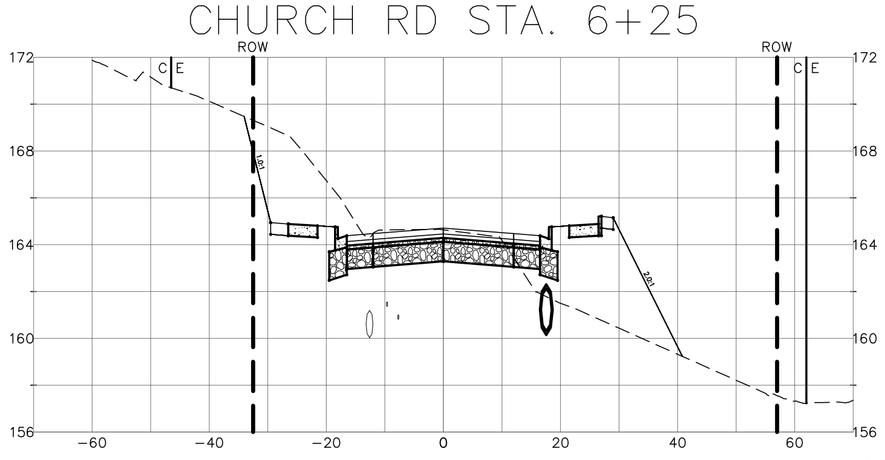

LUIS PONCE
STATE OF WASHINGTON
38378
REGISTERED
PROFESSIONAL ENGINEER
1/8/17

00616.048 4/17/17 KJ

1/05/17 AS-BUILT	DESIGNED BY LP/GKG DRAWN BY LMC CHECKED BY LP	R&E REICHHARDT & EBE ENGINEERING, INC. CONSULTING ENGINEERS PO Box 978 423 Front St., Ste 201 Lynden, Washington 98264 Ph (360) 354-3687 Fax (360) 354-0407	NO. / DATE / REVISION / BY	CITY OF FERNDALE 2095 MAIN STREET FERNDALE, WA 98248	CHURCH ROAD STREET IMPROVEMENTS CROSS SECTIONS	JOB# / DWG AB07037 ALIGN_PROFILE SCALE H: 1"=20' V: 1"=5' DATE 1-5-17 SHEET 48 of 64

P:\Projects\07037\dwg\CD AS BUILT-CONSTRUCTION\Plan Sheets\AB07037 align_profile.dwg, 1/17/2017 1:52:28 PM

CHURCH RD STA. 7+00

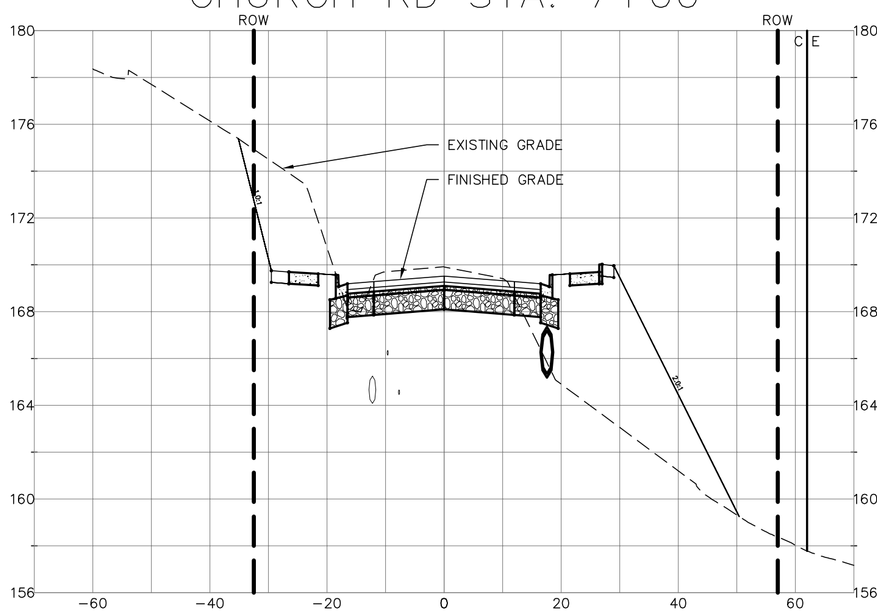

CHURCH RD STA. 7+50

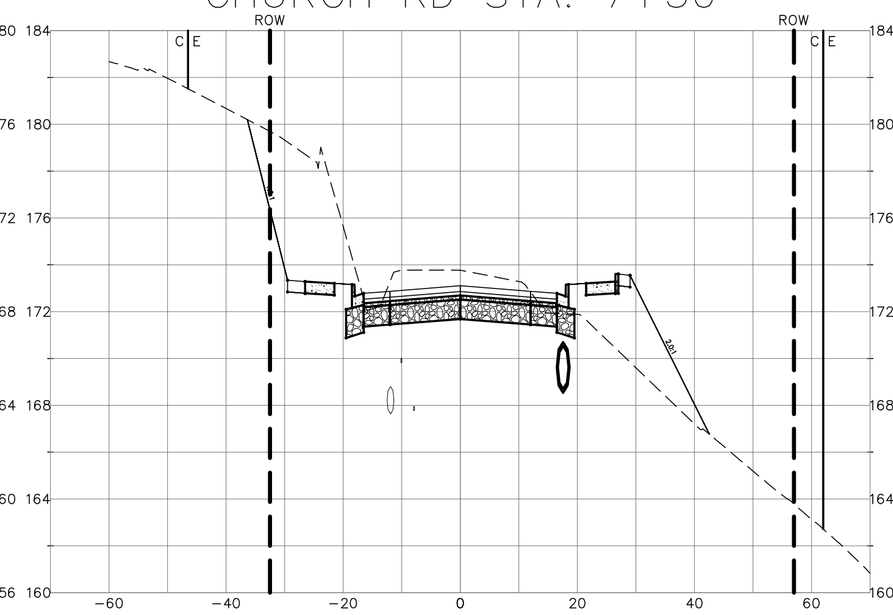

CHURCH RD STA. 8+00

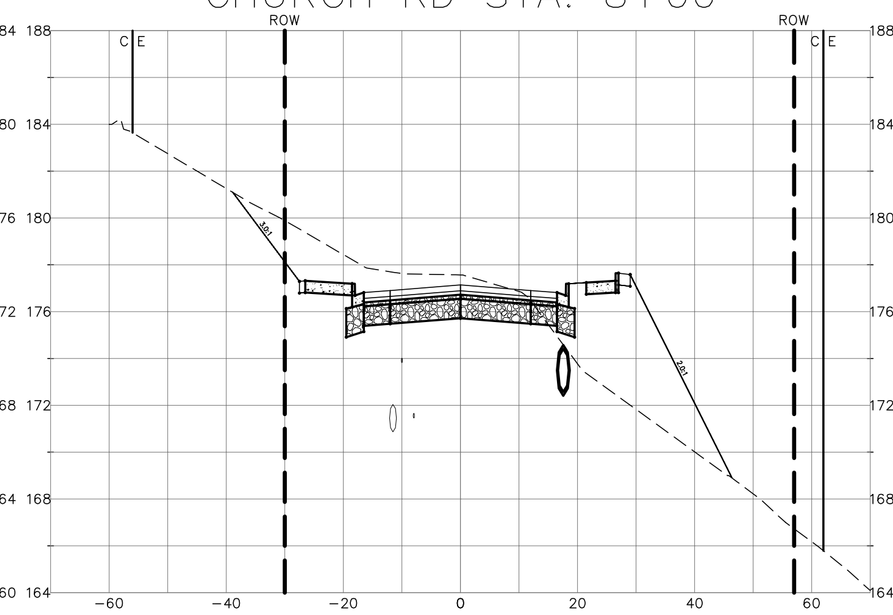

CHURCH RD STA. 8+50

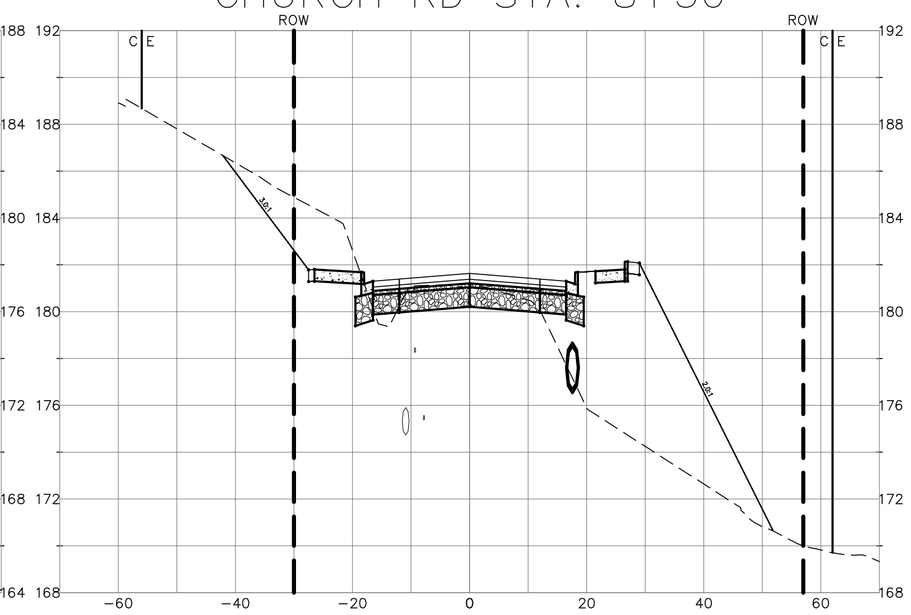

CHURCH RD STA. 6+75

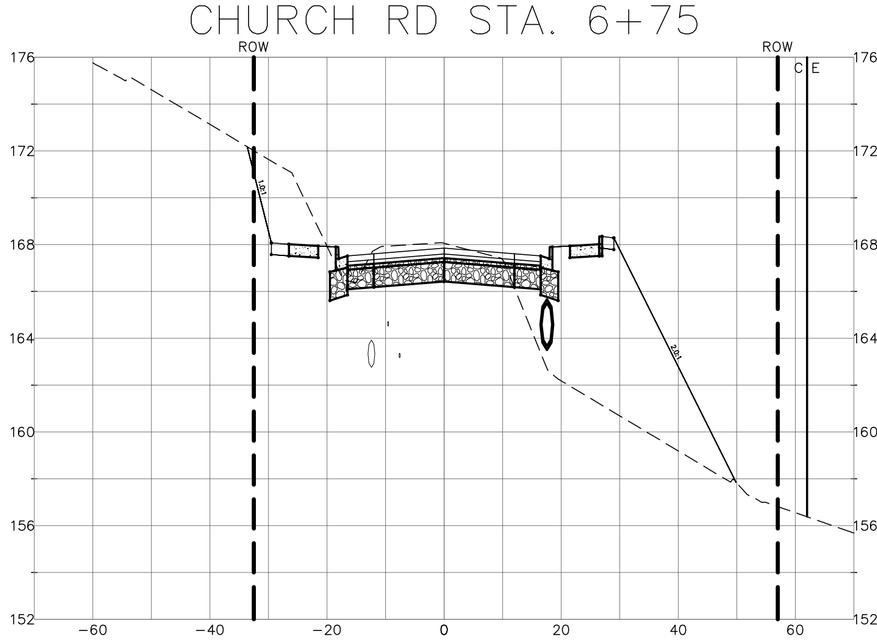

CHURCH RD STA. 7+25

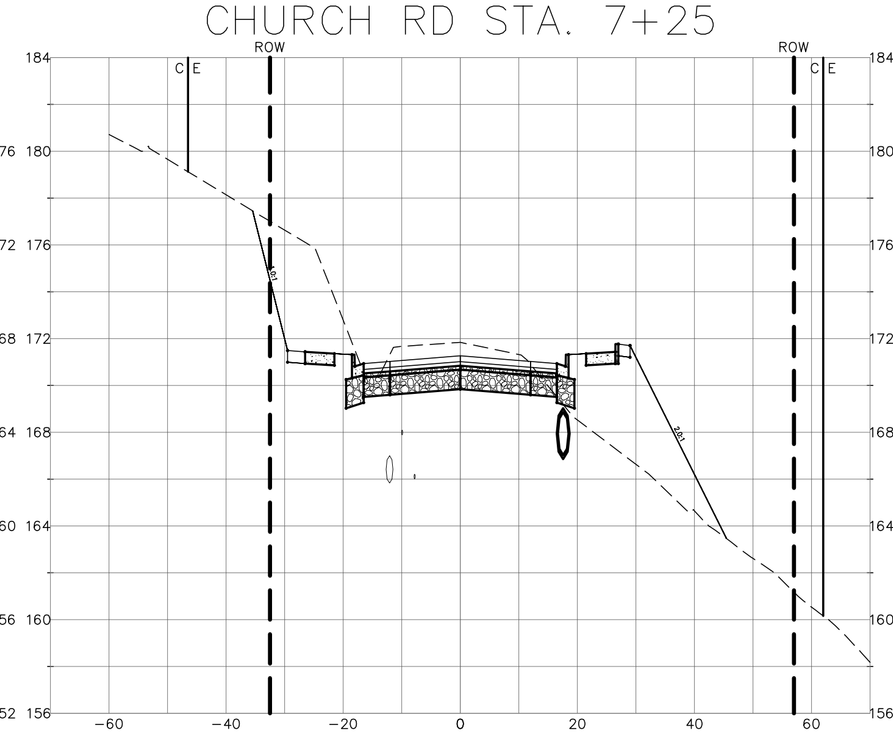

CHURCH RD STA. 7+75

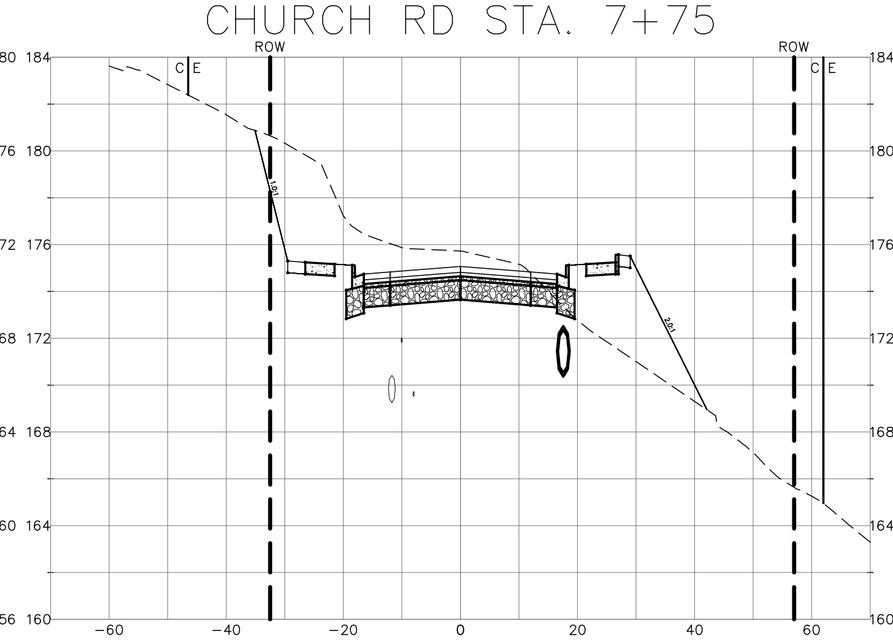

CHURCH RD STA. 8+25

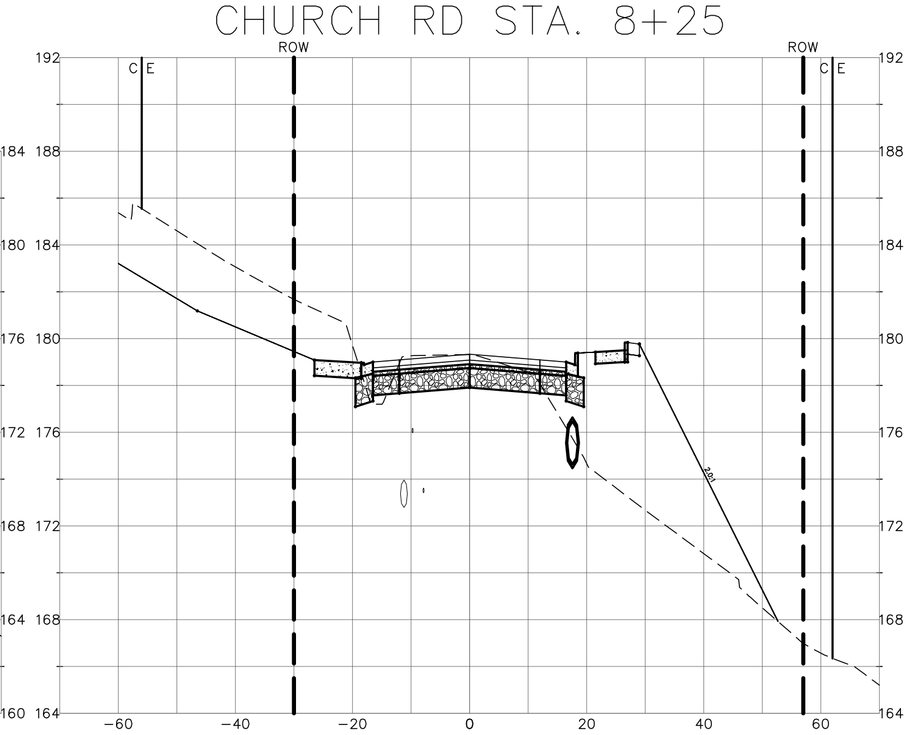

LUIS PONCE
STATE OF WASHINGTON
38378
REGISTERED
PROFESSIONAL ENGINEER
1/6/17

00616.049 4/17/17 KJ

P:\Projects\07037\dwg\CD\ AS BUILT-CONSTRUCTION\Plan Sheets\AB07037 align_profile.dwg, 3/17/2017 1:53:08 PM

1/05/17 AS-BUILT	DESIGNED BY LP/GKG DRAWN BY LMC CHECKED BY LP	R&E REICHHARDT & EBE ENGINEERING, INC. CONSULTING ENGINEERS PO Box 978 423 Front St., Ste 201 Lynden, Washington 98264 Ph (360) 354-3687 Fax (360) 354-0407	NO. / DATE / REVISION / BY	CITY OF FERNDALE 2095 MAIN STREET FERNDALE, WA 98248	CHURCH ROAD STREET IMPROVEMENTS CROSS SECTIONS	JOB# / DWG AB07037 ALIGN_PROFILE SCALE H:1"=20' V:1"=5'	DATE 1-5-17 SHEET 49 of 64

CHURCH RD STA. 9+00

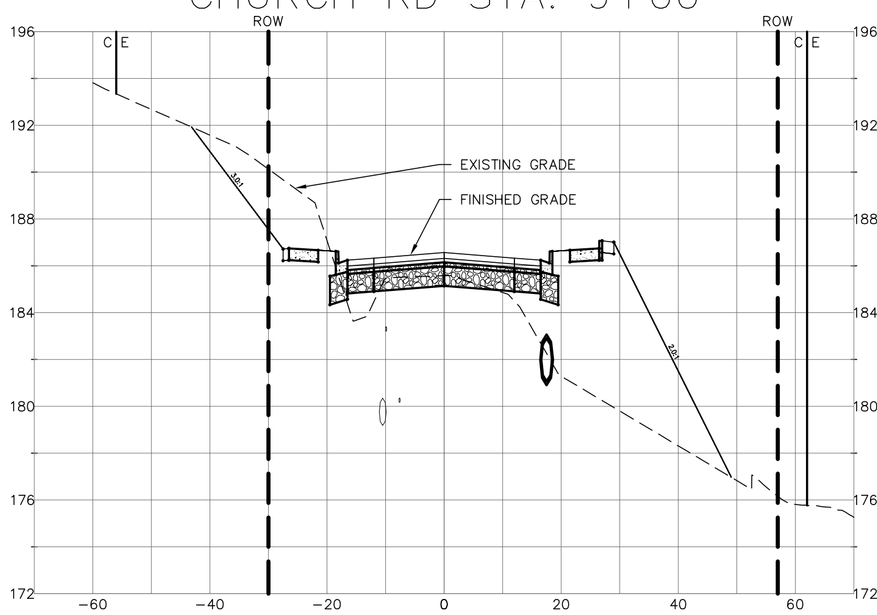

CHURCH RD STA. 9+50

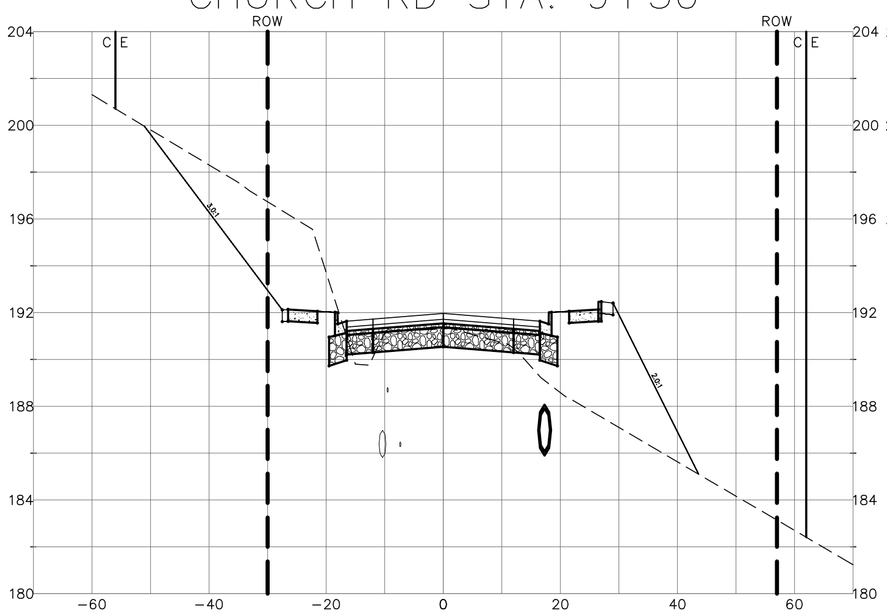

CHURCH RD STA. 10+00

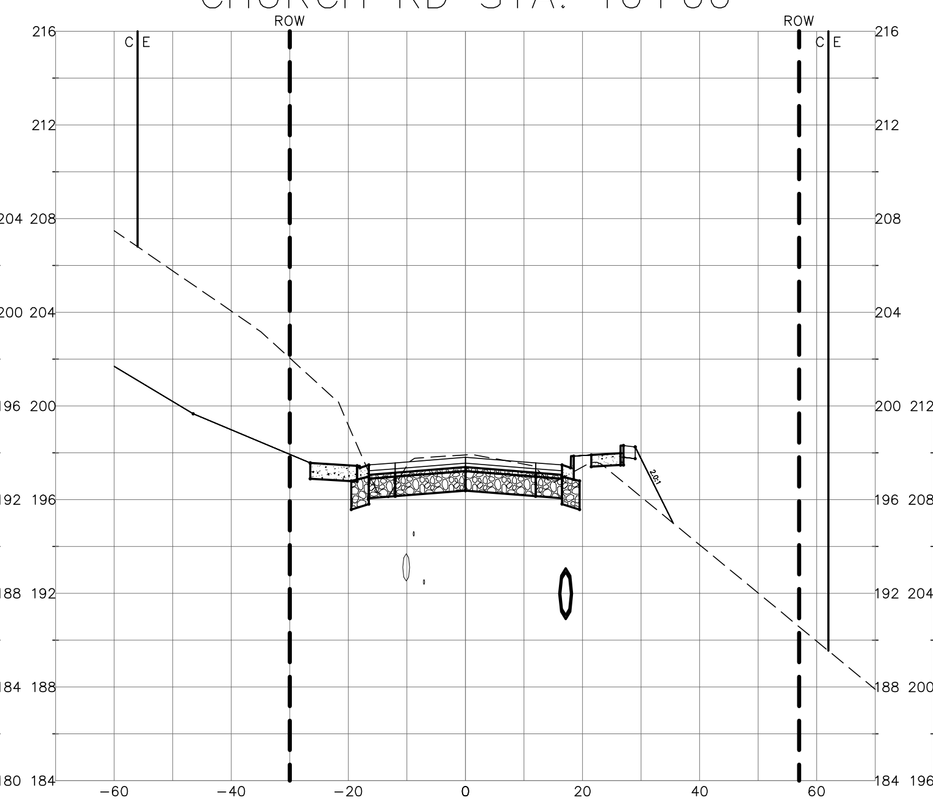

CHURCH RD STA. 10+50

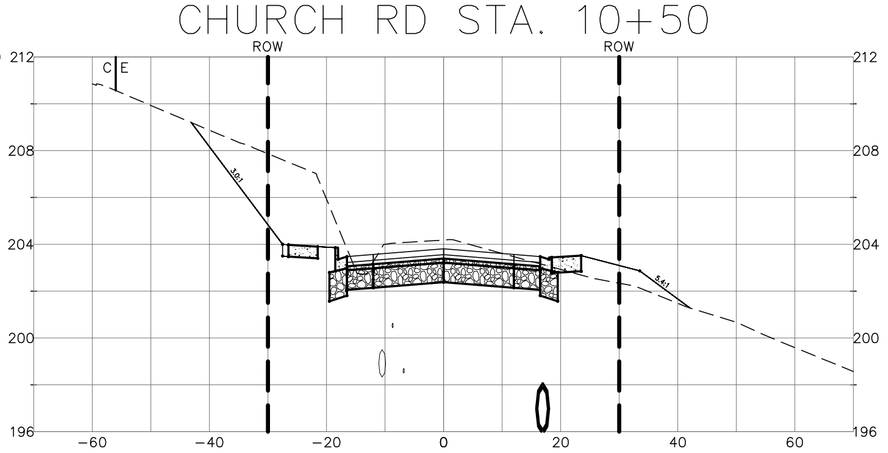

CHURCH RD STA. 8+75

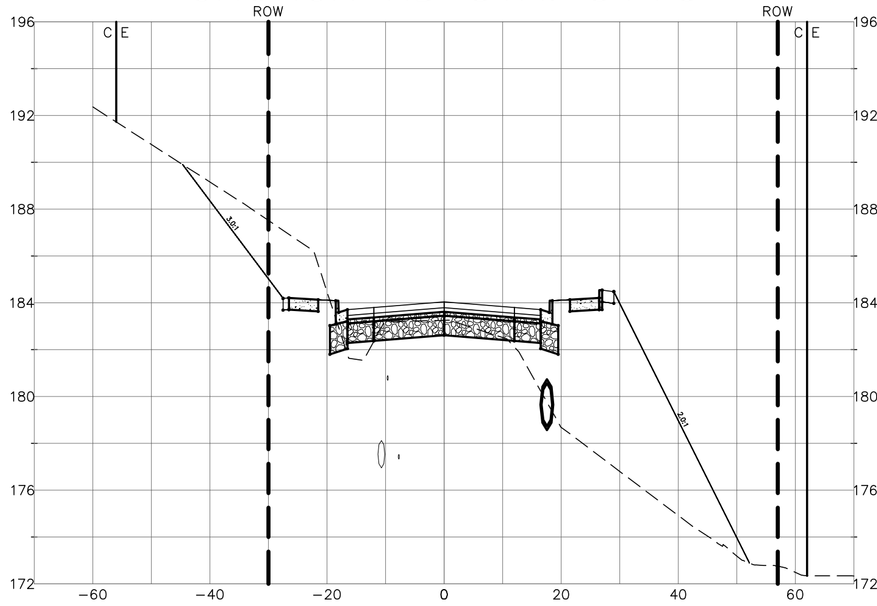

CHURCH RD STA. 9+25

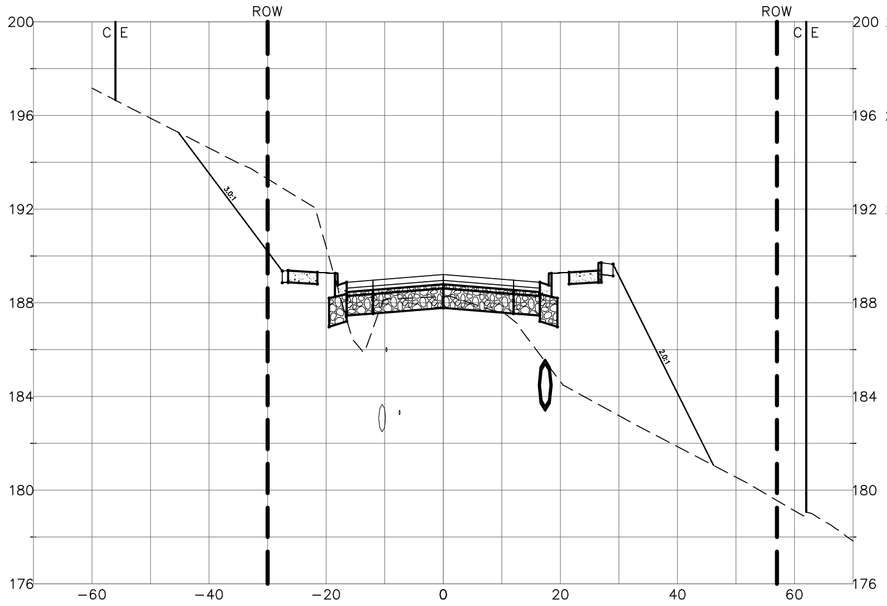

CHURCH RD STA. 9+75

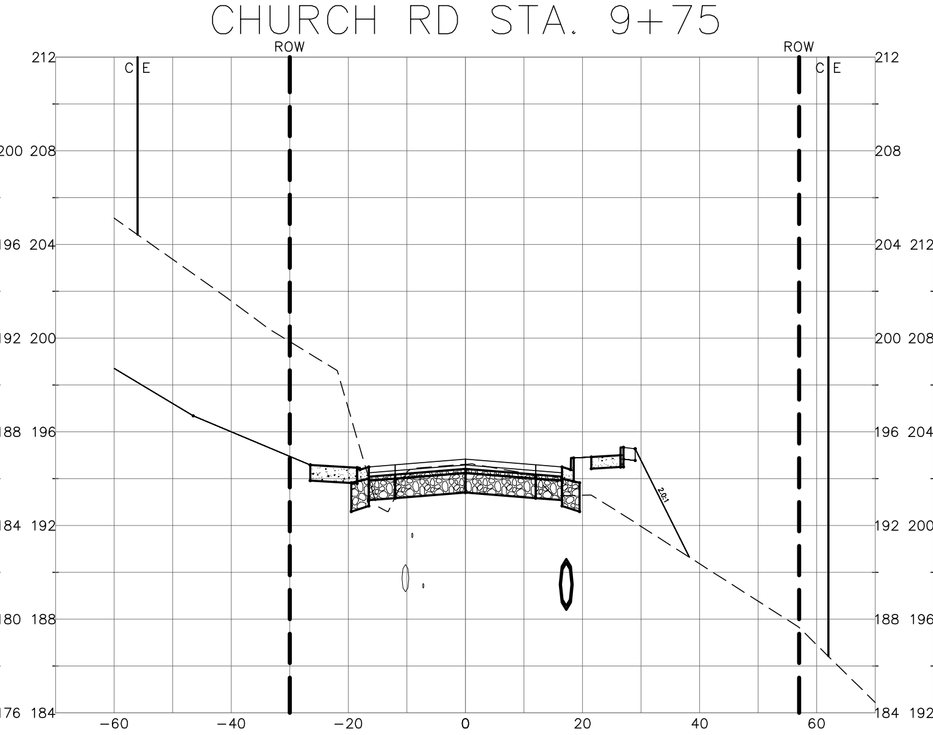

CHURCH RD STA. 10+25

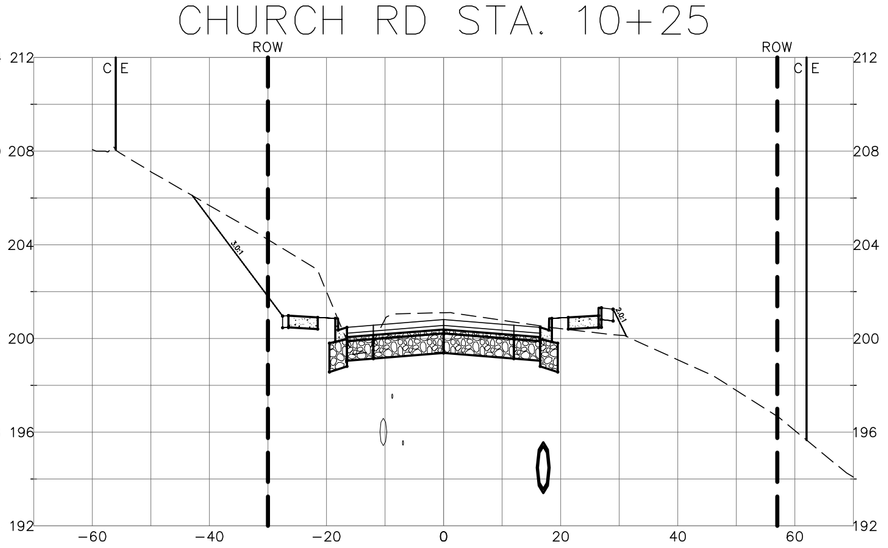

LUIS PONCE
STATE OF WASHINGTON
38378
REGISTERED
PROFESSIONAL ENGINEER
1/5/17

00616.050 4/17/17 KJ

1/05/17 **AS-BUILT**

DESIGNED BY LP/GKG
DRAWN BY LMC
CHECKED BY LP

R&E
REICHHARDT & EBE
ENGINEERING, INC.
CONSULTING ENGINEERS
PO Box 978 423 Front St., Ste 201 Lynden, Washington 98264
Ph (360) 354-3687 Fax (360) 354-0407

NO.	DATE	REVISION	BY

CITY OF FERNDALE
2095 MAIN STREET
FERNDALE, WA 98248

CHURCH ROAD
STREET IMPROVEMENTS
CROSS SECTIONS

JOB# / DWG: AB07037 ALIGN_PROFILE
SCALE: H:1"=20' V:1"=5'
DATE: 1-5-17
SHEET: 50 of 64

P:\Projects\07037\dwg\CD AS BUILT CONSTRUCTION\Plan Sheets\AB07037 align_profile.dwg, 1/17/2017 1:53:38 PM

CHURCH RD STA. 11+25

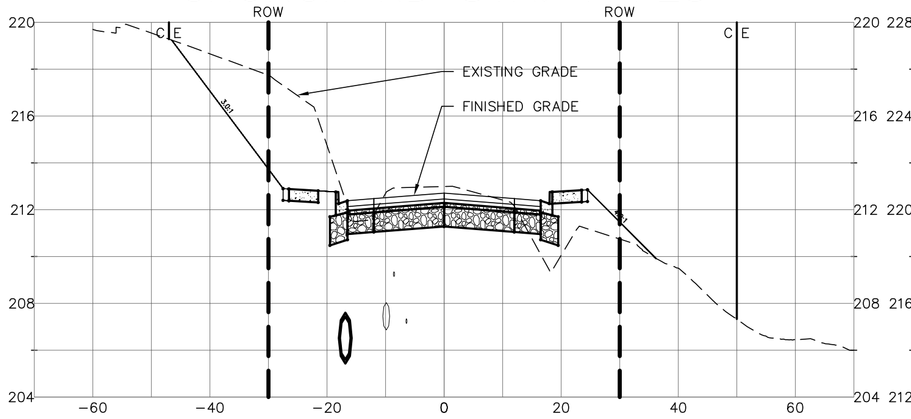

CHURCH RD STA. 12+00

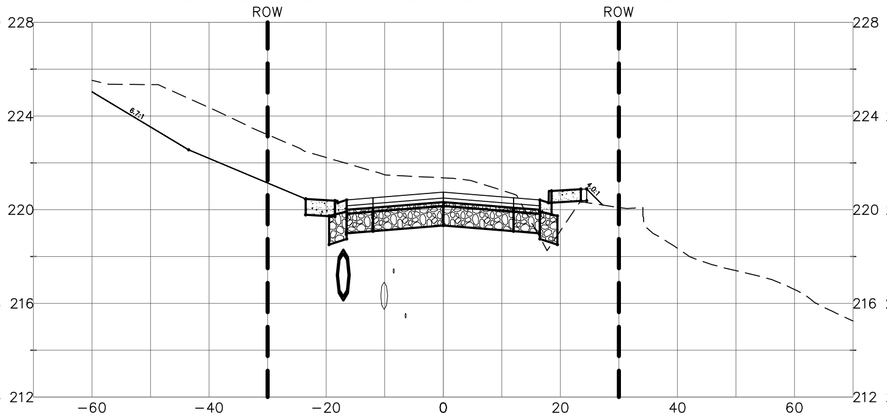

CHURCH RD STA. 12+75

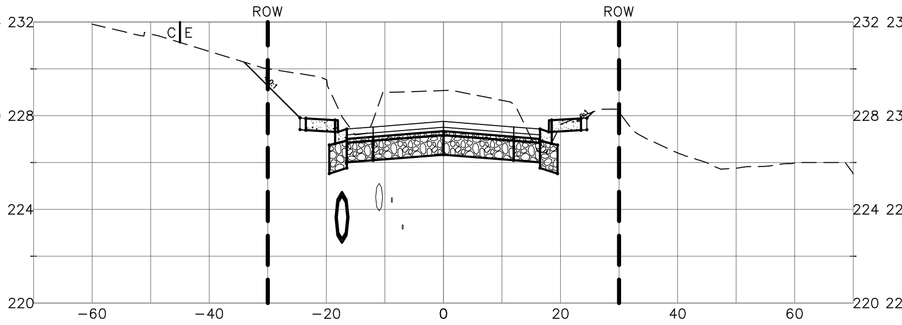

CHURCH RD STA. 13+50

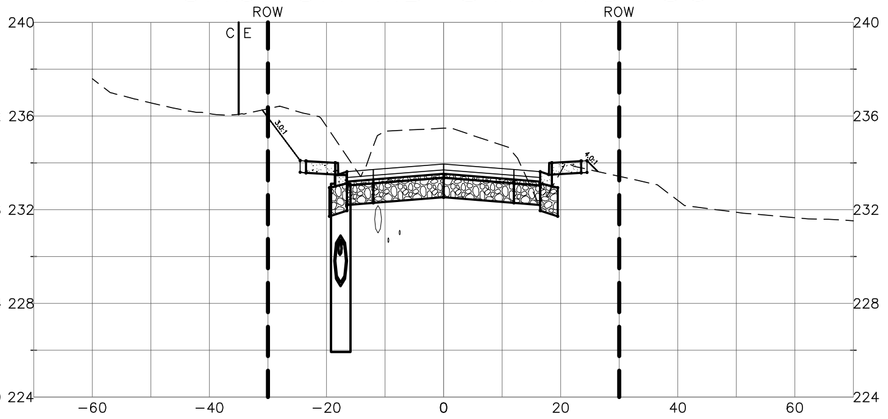

CHURCH RD STA. 11+00

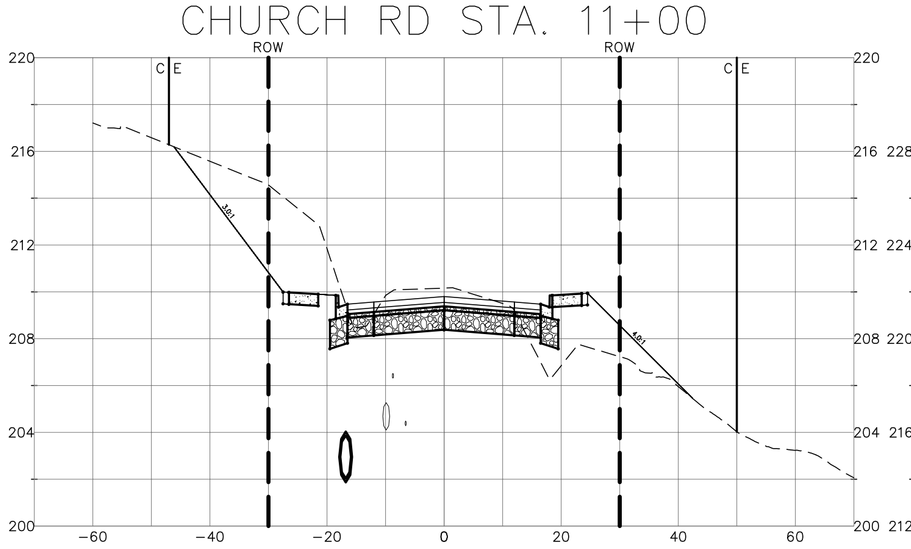

CHURCH RD STA. 11+75

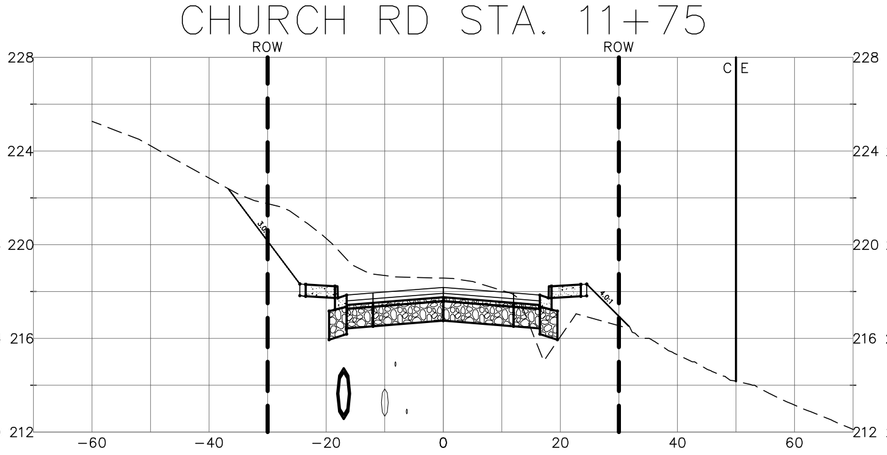

CHURCH RD STA. 12+50

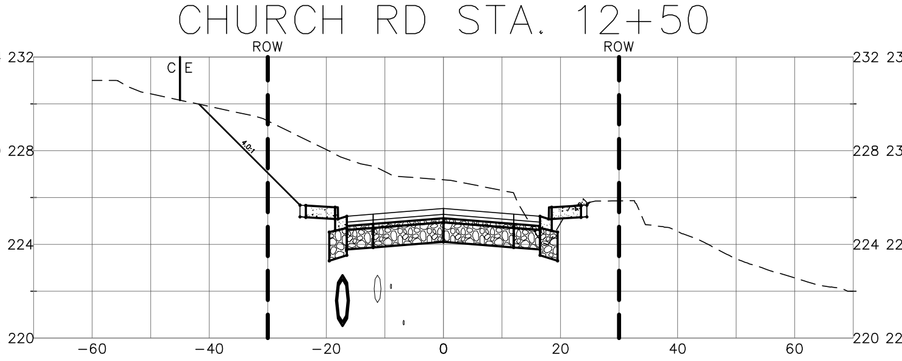

CHURCH RD STA. 13+25

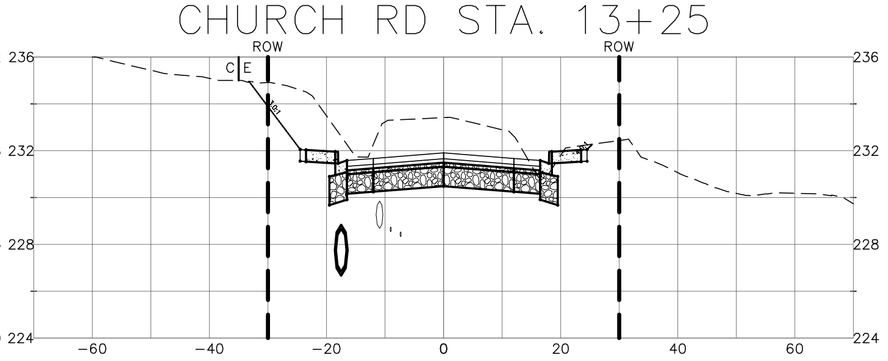

CHURCH RD STA. 10+75

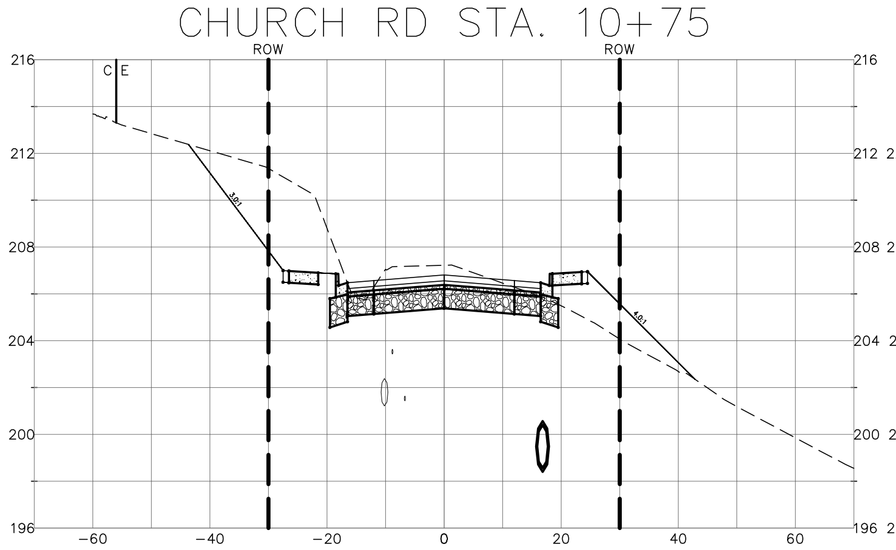

CHURCH RD STA. 11+50

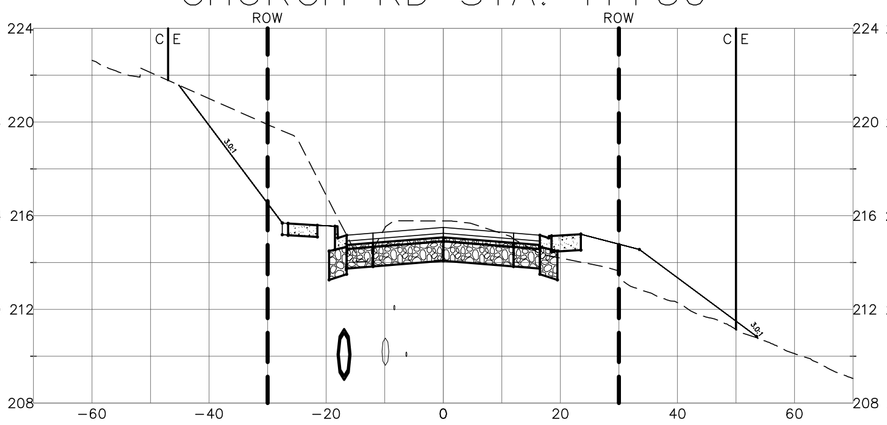

CHURCH RD STA. 12+25

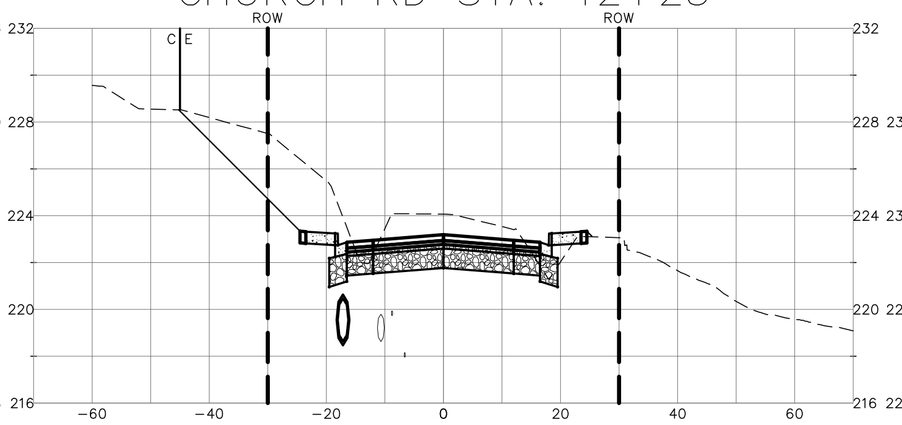

CHURCH RD STA. 13+00

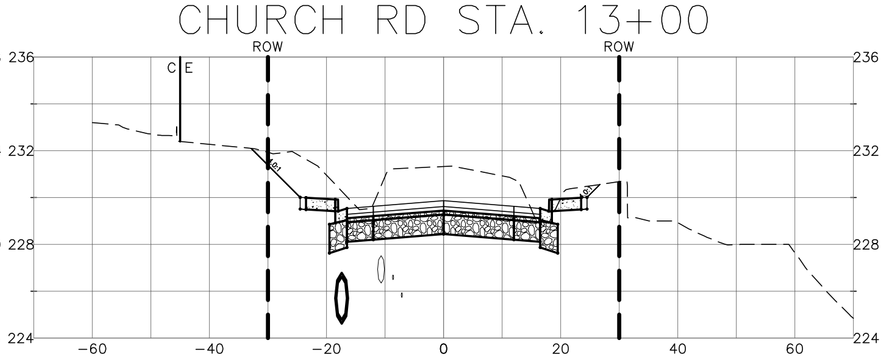

LUIS PONCE
STATE OF WASHINGTON
38378
REGISTERED
PROFESSIONAL ENGINEER
1/6/17

00616.051 4/17/17 KJ

1/05/17 AS-BUILT	DESIGNED BY LP/GKG DRAWN BY LMC CHECKED BY LP	R&E REICHHARDT & EBE ENGINEERING, INC. CONSULTING ENGINEERS PO Box 978 423 Front St., Ste 201 Lynden, Washington 98264 Ph (360) 354-3687 Fax (360) 354-0407	NO. / DATE / REVISION / BY	CITY OF FERNDALE 2095 MAIN STREET FERNDALE, WA 98248	CHURCH ROAD STREET IMPROVEMENTS CROSS SECTIONS	JOB# / DWG AB07037 ALIGN_PROFILE DATE 1-5-17 SCALE H:1"=20' V:1"=5' SHEET 51 of 64

P:\Projects\07037\Dwg\CD AS BUILT-CONSTRUCTION\Plan Sheets\AB07037 Align_profile.dwg, 3/17/2017 1:54:08 PM

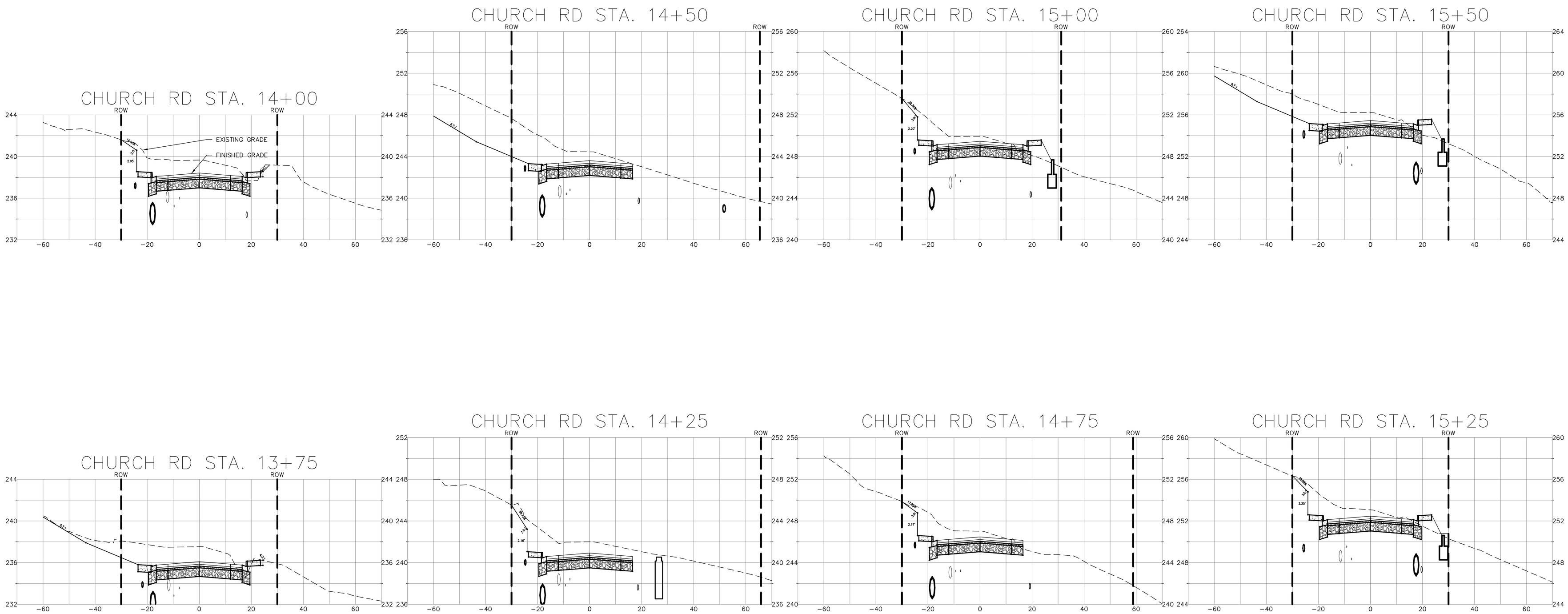

00616.052 4/17/17 KJ

LUIS PONCE
STATE OF WASHINGTON
38378
REGISTERED
PROFESSIONAL ENGINEER
1/5/17

1/05/17 **AS-BUILT**

DESIGNED BY LP/GKG
DRAWN BY LMC
CHECKED BY LP

R&E
REICHHARDT & EBE
ENGINEERING, INC.
CONSULTING ENGINEERS
PO Box 978 423 Front St., Ste 201 Lynden, Washington 98264
Ph (360) 354-3687 Fax (360) 354-0407

NO.	DATE	REVISION	BY

CITY OF FERNDALE
2095 MAIN STREET
FERNDALE, WA 98248

CHURCH ROAD
STREET IMPROVEMENTS
CROSS SECTIONS

JOB# / DWG: AB07037 ALIGN_PROFILE
SCALE: H:1"=20' V:1"=5'
DATE: 1-5-17
SHEET: 52 of 64

P:\Projects\07037\dwg\CD AS BUILT CONSTRUCTION\Plan Sheets\AB07037 align_profile.dwg, 3/17/2017 1:54:38 PM

CHURCH RD STA. 16+00

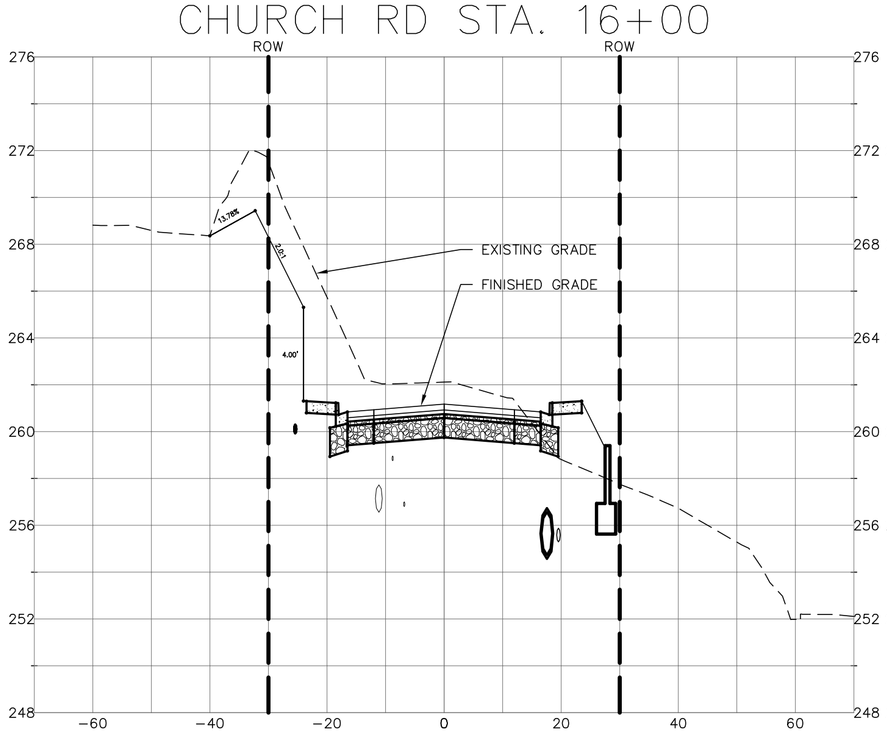

CHURCH RD STA. 16+50

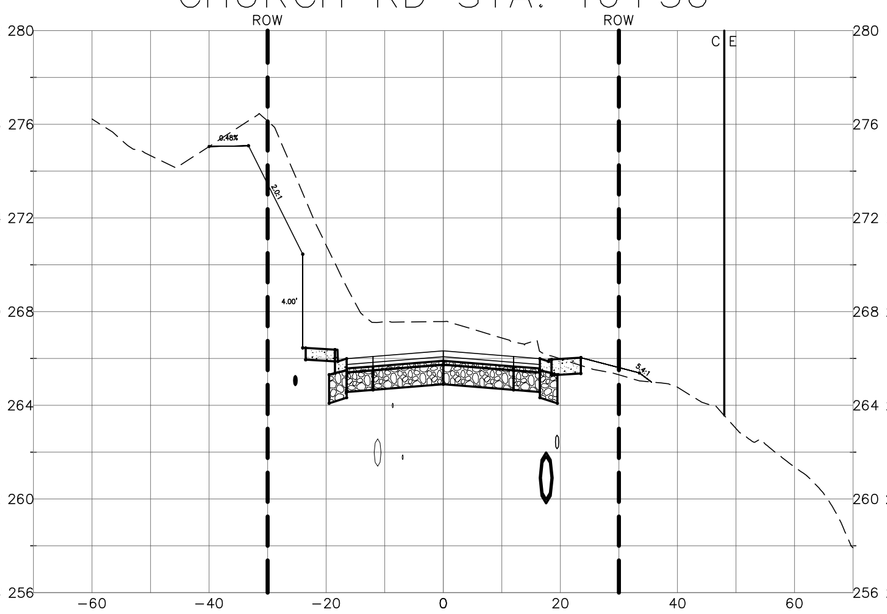

CHURCH RD STA. 17+00

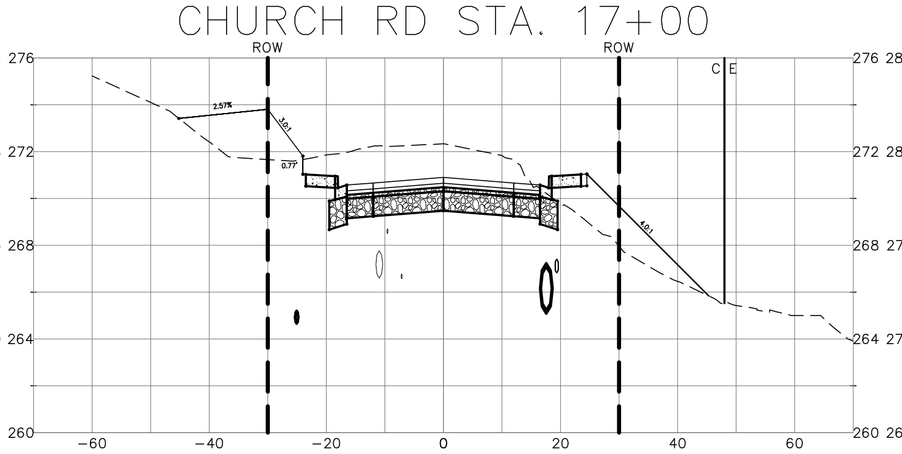

CHURCH RD STA. 17+50

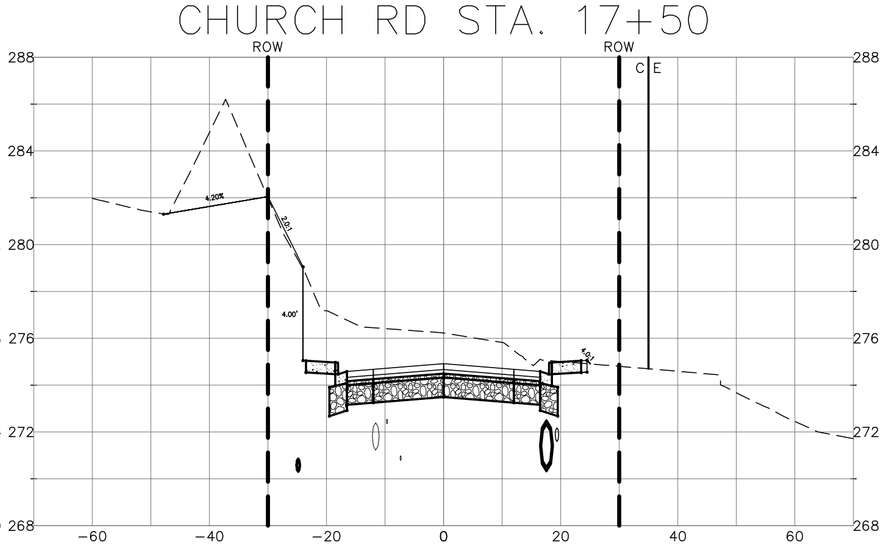

CHURCH RD STA. 15+75

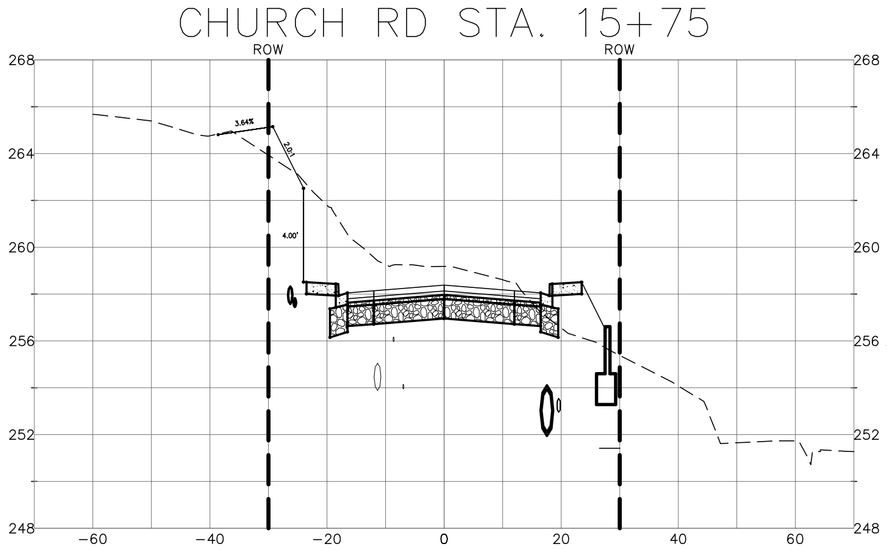

CHURCH RD STA. 16+25

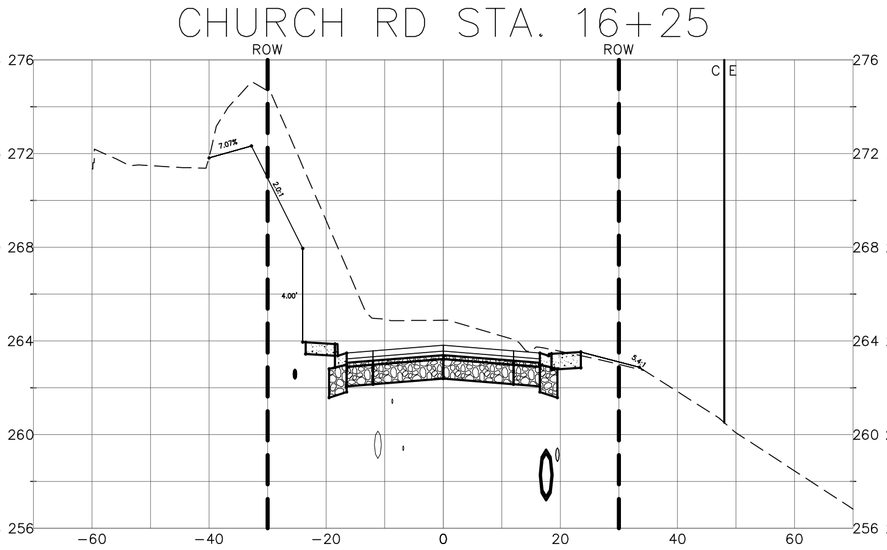

CHURCH RD STA. 16+75

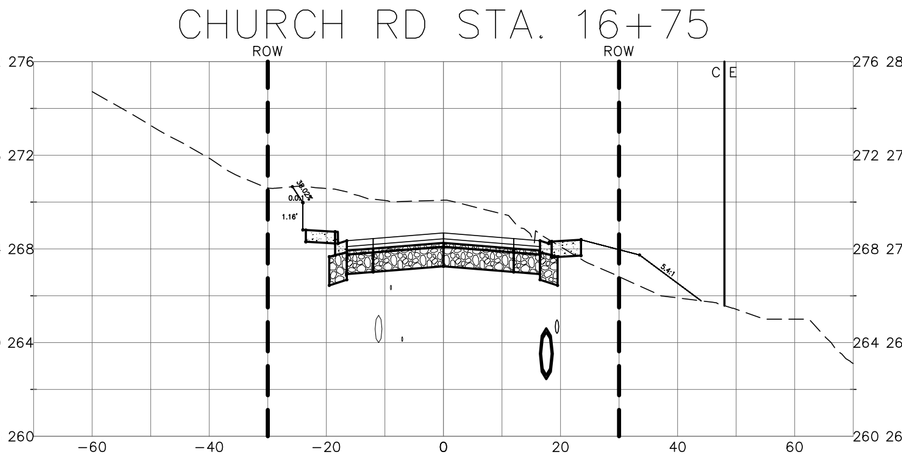

CHURCH RD STA. 17+25

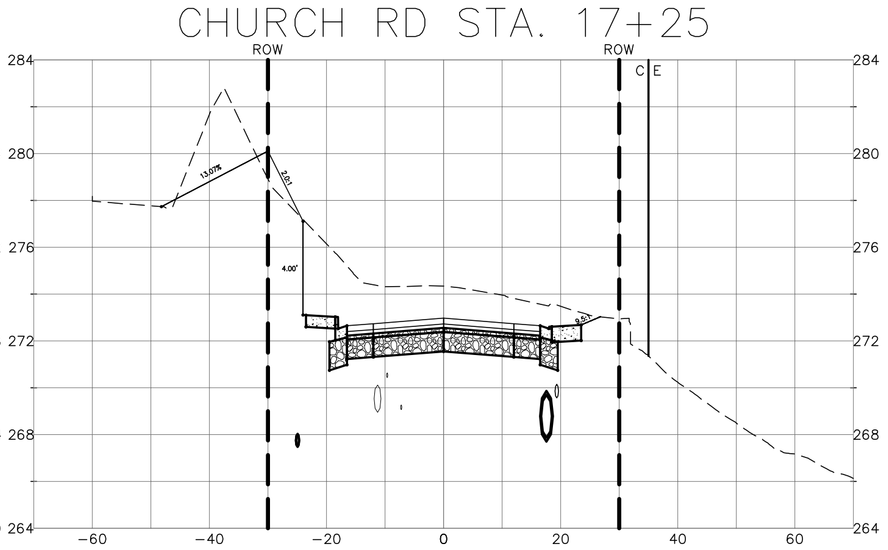

LUIS POUCE
STATE OF WASHINGTON
38378
REGISTERED
PROFESSIONAL ENGINEER
1/5/17

00616 053 4/17/17 KJ

P:\Projects\07037\dwg\CD AS BUILT-CONSTRUCTION\Plan Sheets\AB07037 align_profile.dwg, 3/17/2017 1:55:08 PM

1/05/17 AS-BUILT	DESIGNED BY LP/GKG DRAWN BY LMC CHECKED BY LP	R&E REICHHARDT & EBE ENGINEERING, INC. CONSULTING ENGINEERS PO Box 978 423 Front St., Ste 201 Lynden, Washington 98264 Ph (360) 354-3687 Fax (360) 354-0407	NO. / DATE / REVISION / BY	CITY OF FERNDALE 2095 MAIN STREET FERNDALE, WA 98248	CHURCH ROAD STREET IMPROVEMENTS CROSS SECTIONS	JOB# / DWG AB07037 ALIGN_PROFILE SCALE H:1"=20' V:1"=5'	DATE 1-5-17 SHEET 53 of 64

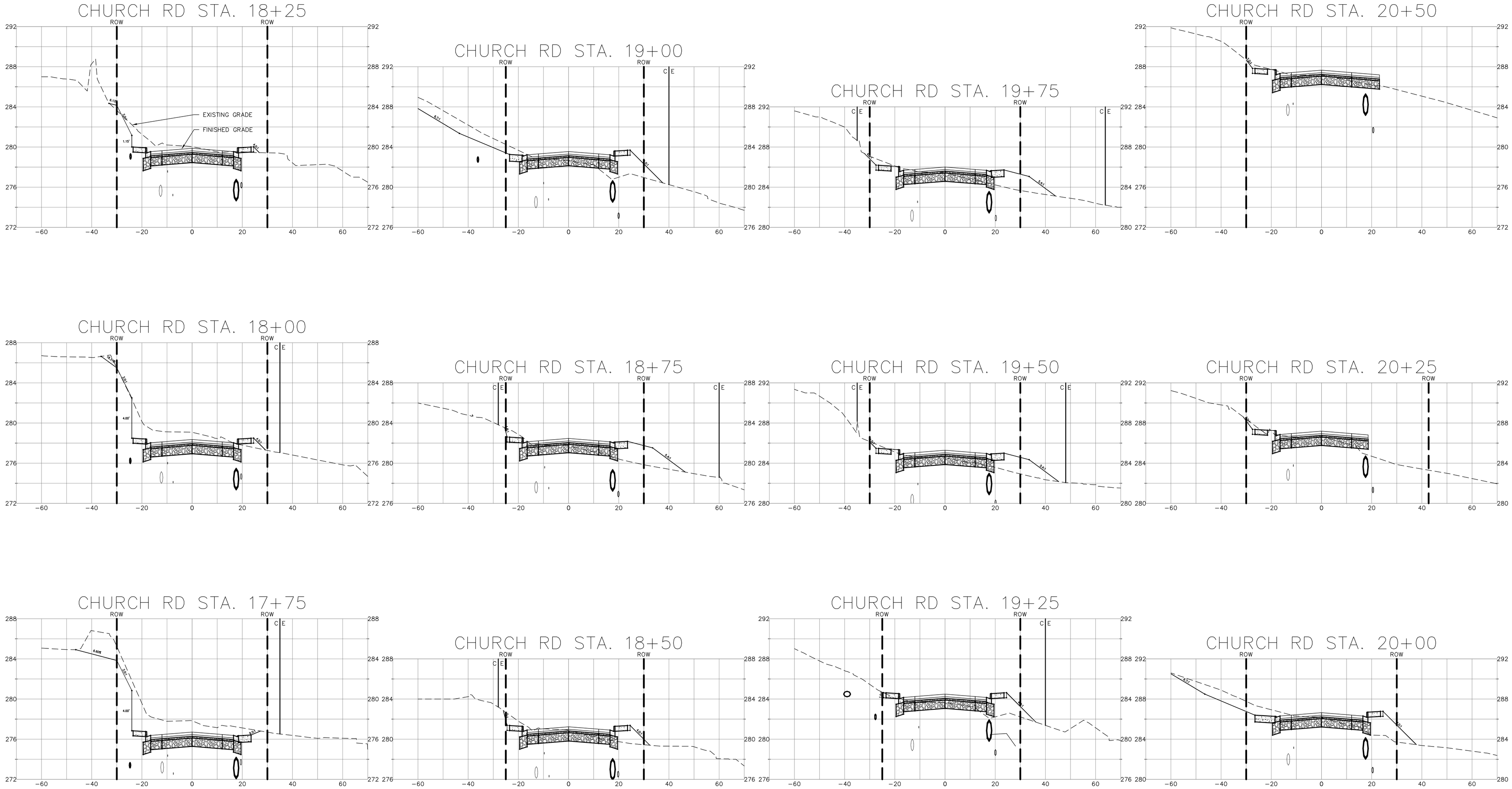

00616.054 4/17/17 KJ

LUIS POYCE
STATE OF WASHINGTON
38378
REGISTERED
PROFESSIONAL ENGINEER
1/5/17

1/05/17 AS-BUILT	DESIGNED BY LP/GKG DRAWN BY LMC CHECKED BY LP	R&E REICHHARDT & EBE ENGINEERING, INC. CONSULTING ENGINEERS PO Box 978 423 Front St., Ste 201 Lynden, Washington 98264 Ph (360) 354-3687 Fax (360) 354-0407	NO. / DATE / REVISION / BY	CITY OF FERNDALE 2095 MAIN STREET FERNDALE, WA 98248	CHURCH ROAD STREET IMPROVEMENTS CROSS SECTIONS	JOB# / DWG AB07037 ALIGN_PROFILE SCALE H:1"=20' V:1"=5' DATE 1-5-17 SHEET 54 of 64

P:\Projects\07037\dwg\CD AS BUILT CONSTRUCTION\Plan Sheets\AB07037 align_profile.dwg, 3/17/2017 1:55:38 PM

CHURCH RD STA. 21+50

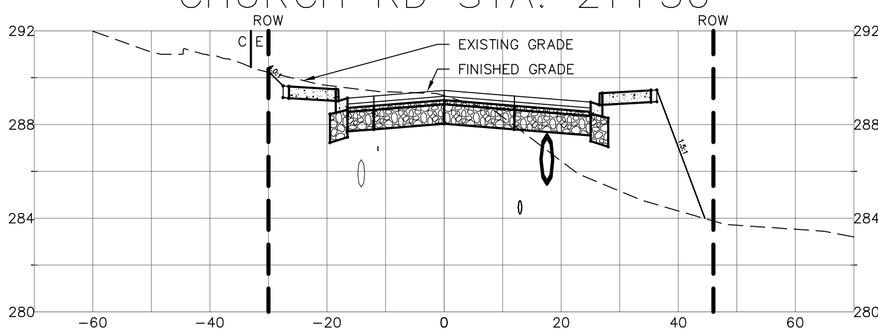

CHURCH RD STA. 22+50

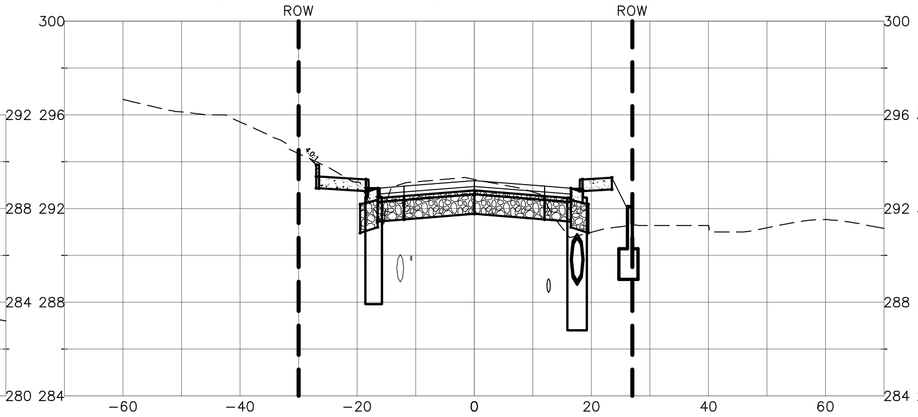

CHURCH RD STA. 23+50

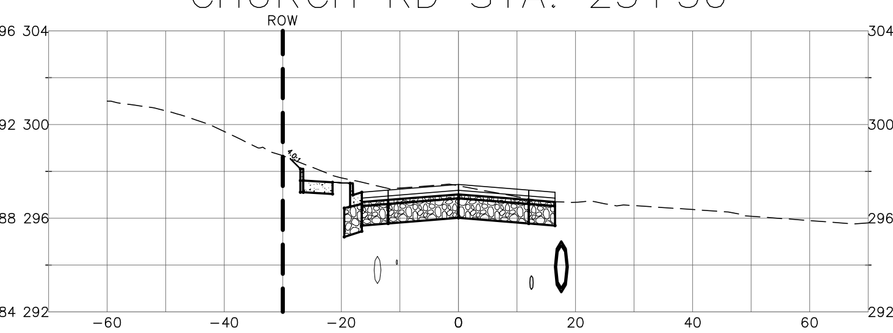

CHURCH RD STA. 24+50

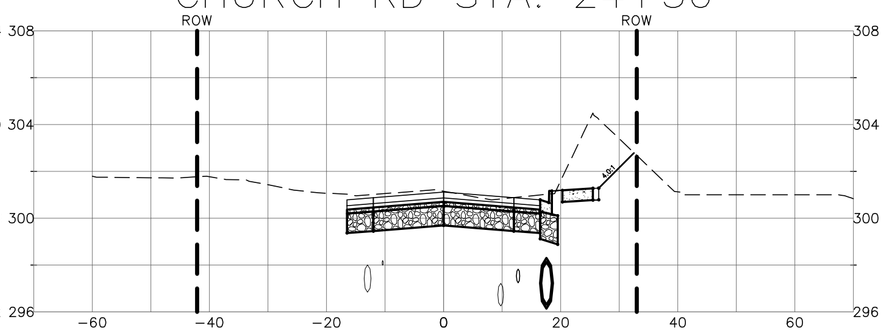

CHURCH RD STA. 21+25

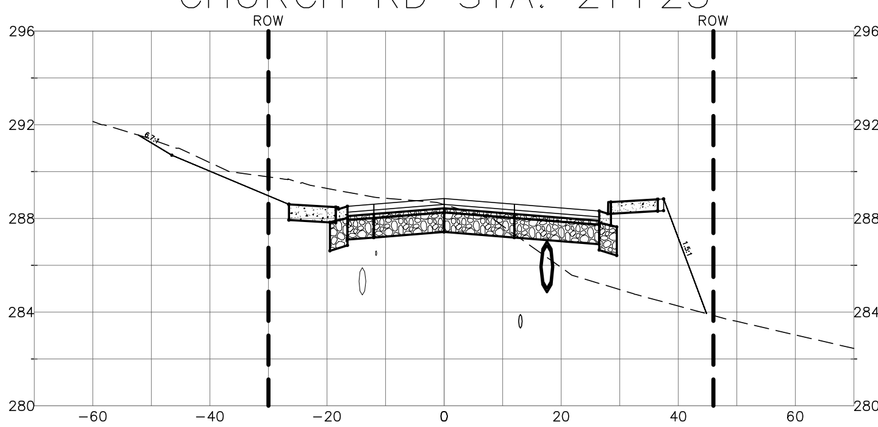

CHURCH RD STA. 22+25

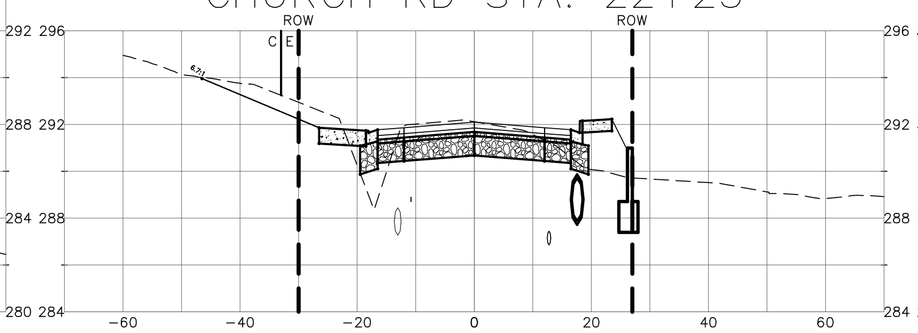

CHURCH RD STA. 23+25

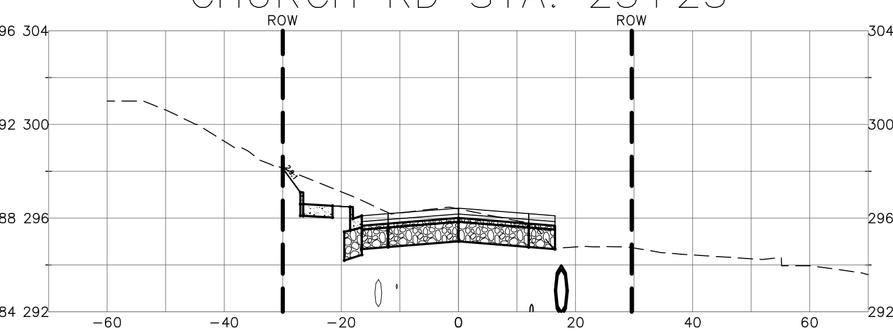

CHURCH RD STA. 24+25

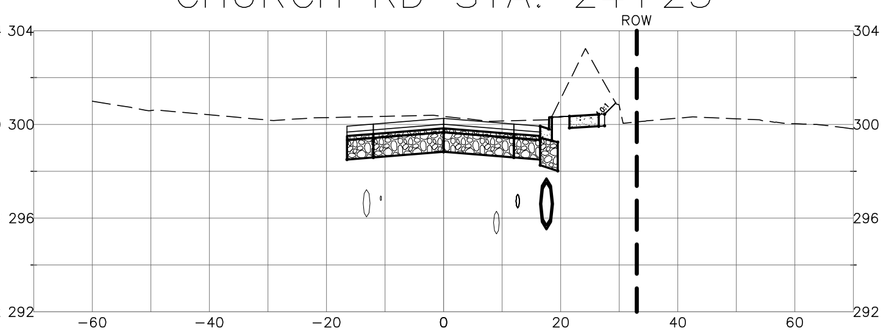

CHURCH RD STA. 21+00

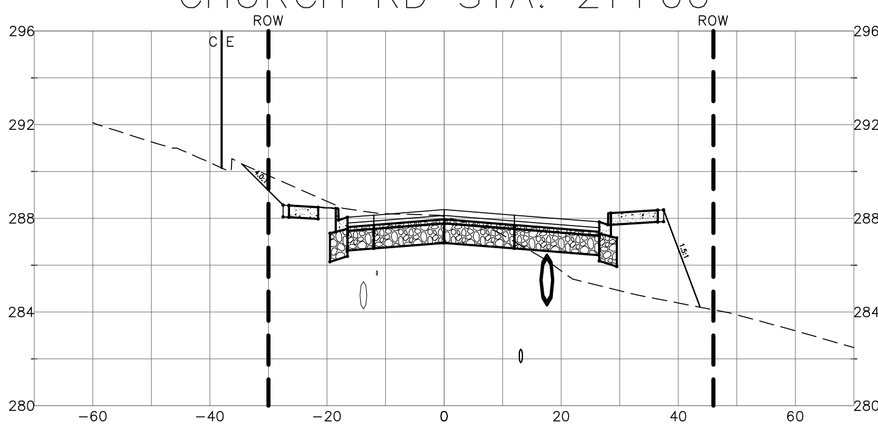

CHURCH RD STA. 22+00

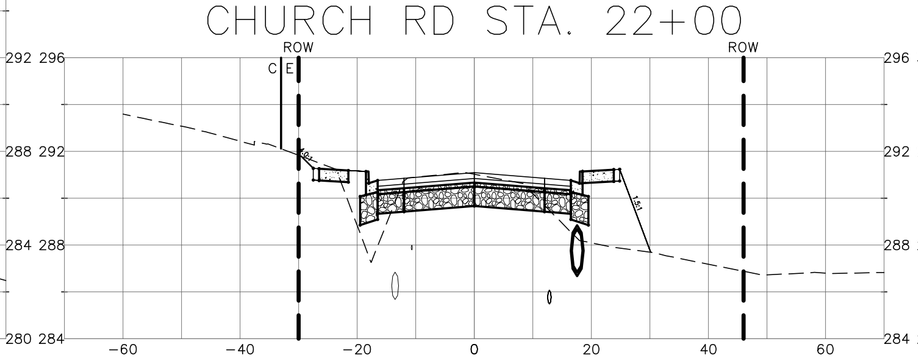

CHURCH RD STA. 23+00

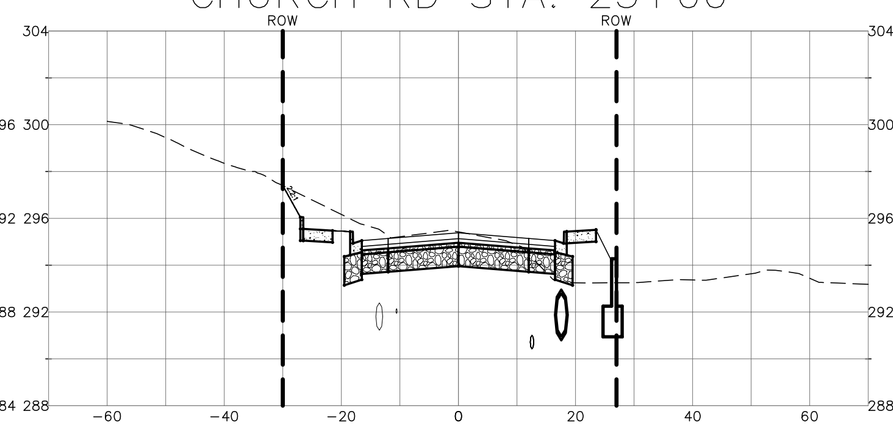

CHURCH RD STA. 24+00

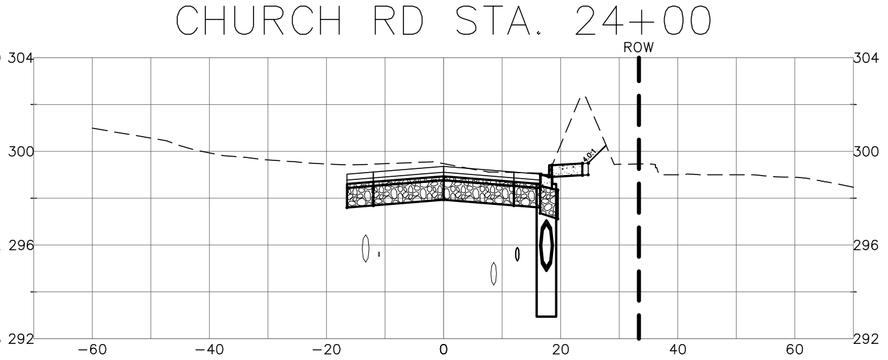

CHURCH RD STA. 20+75

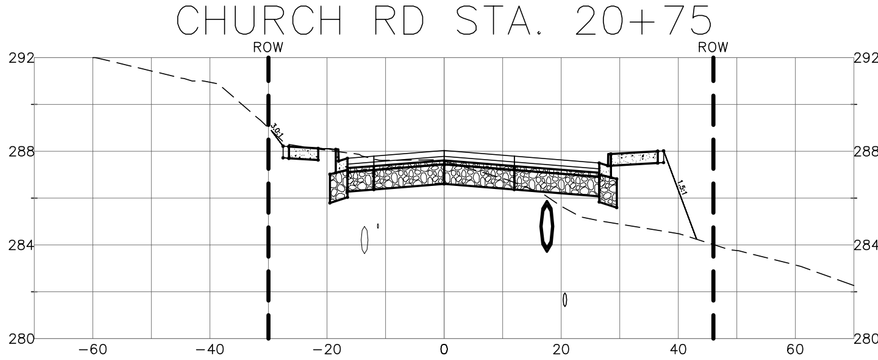

CHURCH RD STA. 21+75

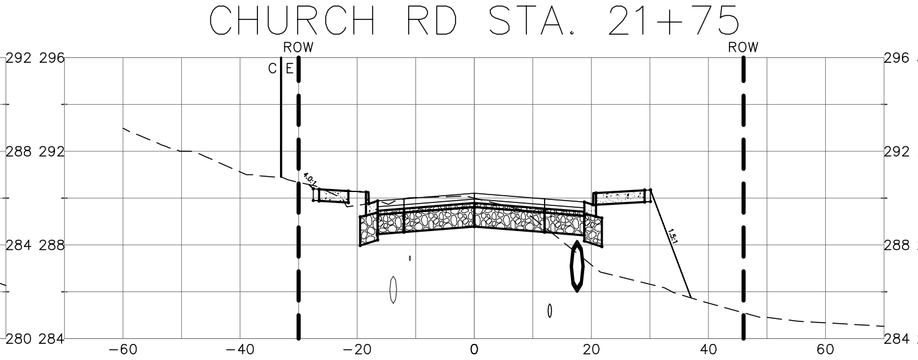

CHURCH RD STA. 22+75

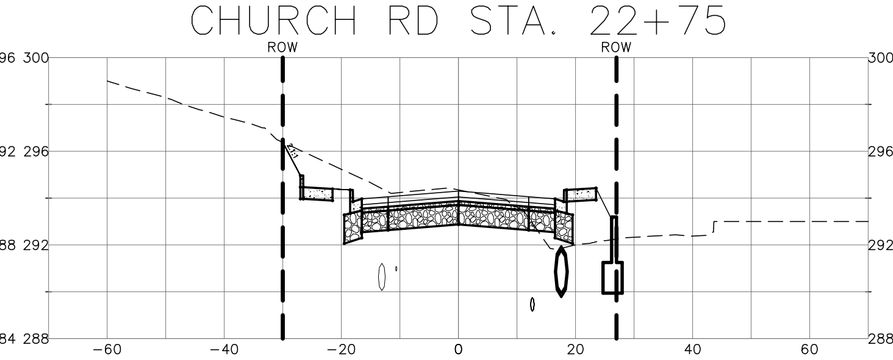

CHURCH RD STA. 23+75

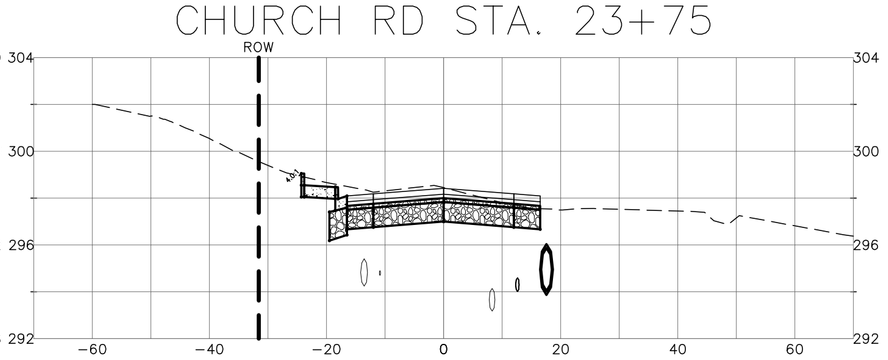

LUIS PONCE
STATE OF WASHINGTON
38378
REGISTERED
PROFESSIONAL ENGINEER
1/5/17

00616.055 4/17/17 KJ

1/05/17 **AS-BUILT**

DESIGNED BY	LP/GKG
DRAWN BY	LMC
CHECKED BY	LP

R&E
REICHHARDT & EBE
ENGINEERING, INC.
CONSULTING ENGINEERS
PO Box 978 423 Front St., Ste 201 Lynden, Washington 98264
Ph (360) 354-3687 Fax (360) 354-0407

NO.	DATE	REVISION	BY

CITY OF FERNDALE
2095 MAIN STREET
FERNDALE, WA 98248

CHURCH ROAD
STREET IMPROVEMENTS
CROSS SECTIONS

JOB# / DWG	DATE
AB07037 ALIGN_PROFILE	1-5-17
SCALE H:1"=20' V:1"=5'	SHEET 55 of 64

P:\Projects\07037\dwg\CD AS BUILT CONSTRUCTION\Plan Sheets\AB07037 align_profile.dwg, 3/17/2017 1:56:08 PM

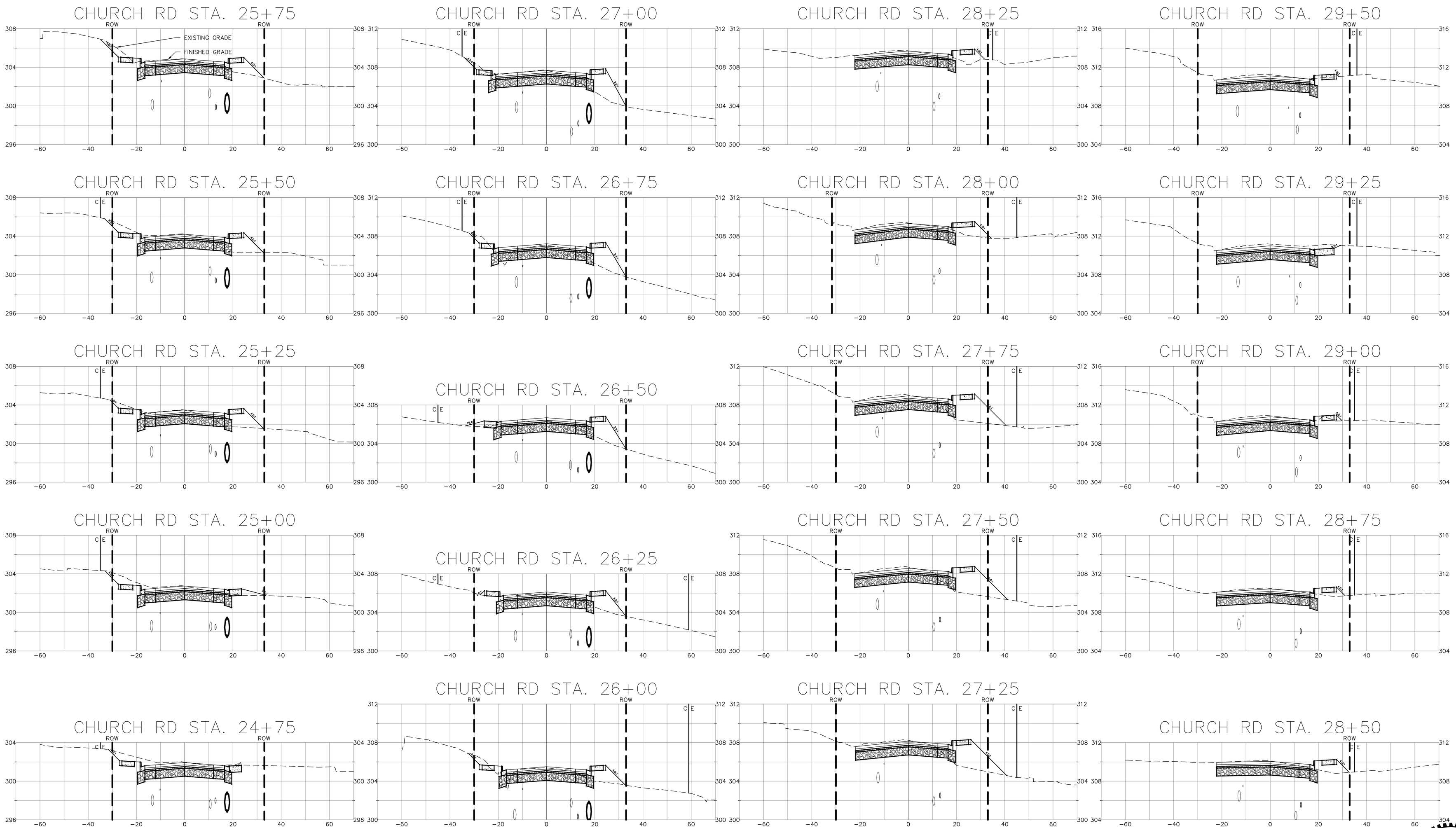

00616.056 4/17/17 KJ

LUIS POINCE
STATE OF WASHINGTON
38378
REGISTERED
PROFESSIONAL ENGINEER
1/5/17

1/05/17 AS-BUILT

DESIGNED BY LP/GKG
DRAWN BY LMC
CHECKED BY LP

REICHHARDT & EBE
ENGINEERING, INC.
CONSULTING ENGINEERS
PO Box 978 423 Front St., Ste 201 Lynden, Washington 98264
Ph (360) 354-3687 Fax (360) 354-0407

NO.	DATE	REVISION	BY

CITY OF FERNDALE
2095 MAIN STREET
FERNDALE, WA 98248

CHURCH ROAD
STREET IMPROVEMENTS
CROSS SECTIONS

JOB# / DWG AB07037 ALIGN_PROFILE
DATE 1-5-17
SCALE H:1"=20' V:1"=5'
SHEET 56 of 64

P:\Projects\07037\dwg\CD AS BUILT-CONSTRUCTION\Plan Sheets\AB07037 align_profile.dwg, 3/17/2017 1:56:39 PM

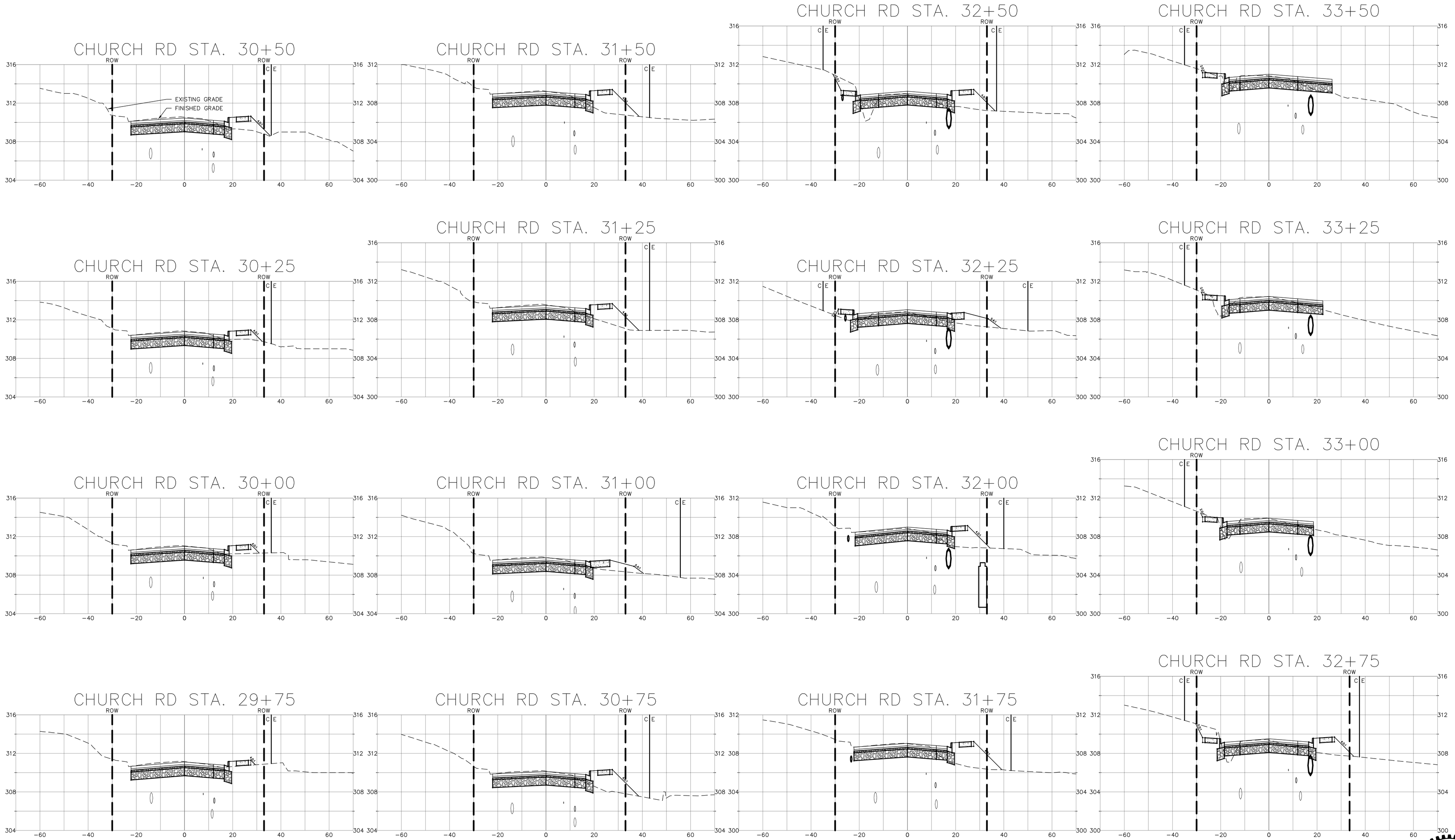

00616.057 4/17/17 KJ

LUIS PONCE
STATE OF WASHINGTON
38378
REGISTERED
PROFESSIONAL ENGINEER
1/5/17

1/05/17 AS-BUILT	DESIGNED BY LP/GKG DRAWN BY LMC CHECKED BY LP	R&E REICHHARDT & EBE ENGINEERING, INC. CONSULTING ENGINEERS PO Box 978 423 Front St., Ste 201 Lynden, Washington 98264 Ph (360) 354-3687 Fax (360) 354-0407	NO. / DATE / REVISION / BY	CITY OF FERNDALE 2095 MAIN STREET FERNDALE, WA 98248	CHURCH ROAD STREET IMPROVEMENTS CROSS SECTIONS	JOB# / DWG AB07037 ALIGN_PROFILE DATE 1-5-17 SCALE H: 1"=20' V: 1"=5' SHEET 57 of 64

P:\Projects\07037\dwg\CD AS BUILT-CONSTRUCTION\Plan Sheets\AB07037 align_profile.dwg, 3/17/2017 1:57:08 PM

CHURCH RD STA. 34+50

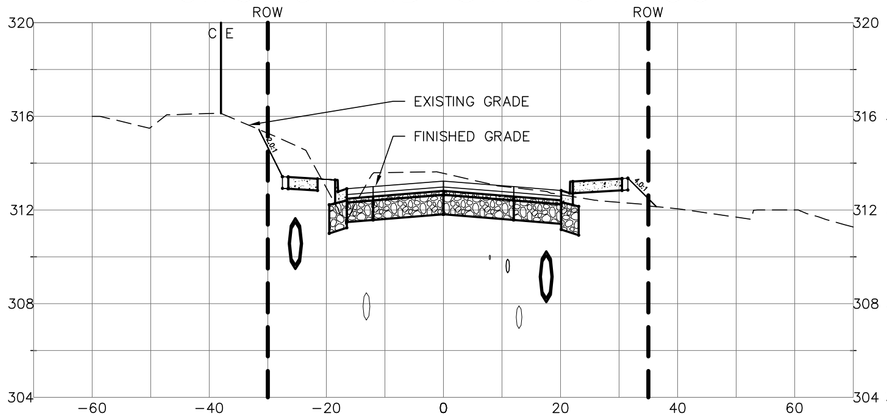

CHURCH RD STA. 35+50

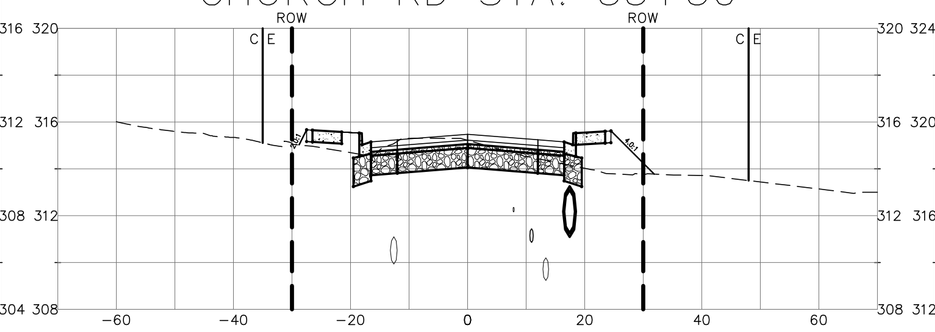

CHURCH RD STA. 36+50

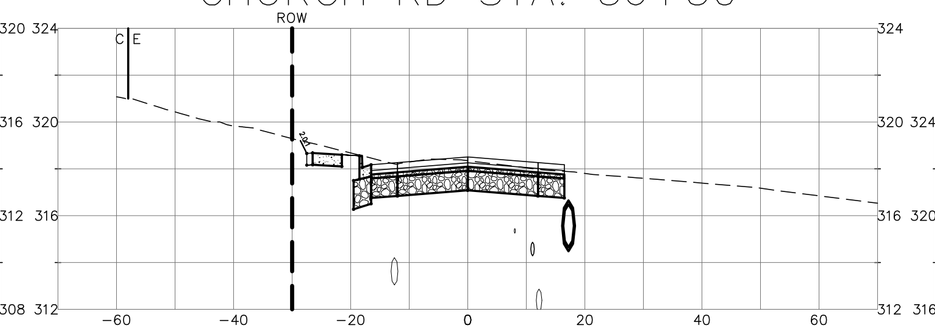

CHURCH RD STA. 37+50

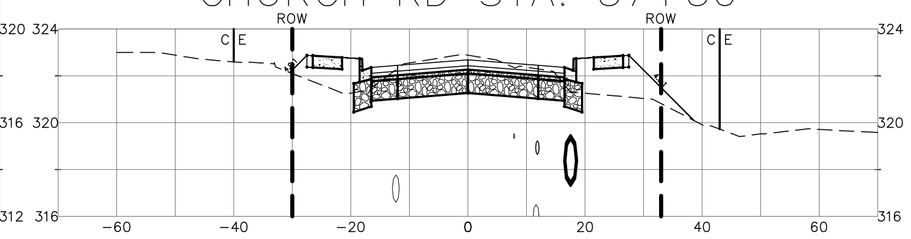

CHURCH RD STA. 34+25

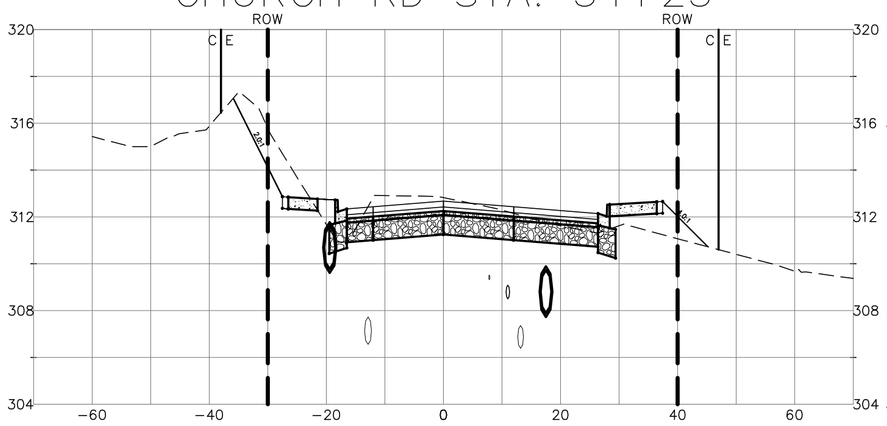

CHURCH RD STA. 35+25

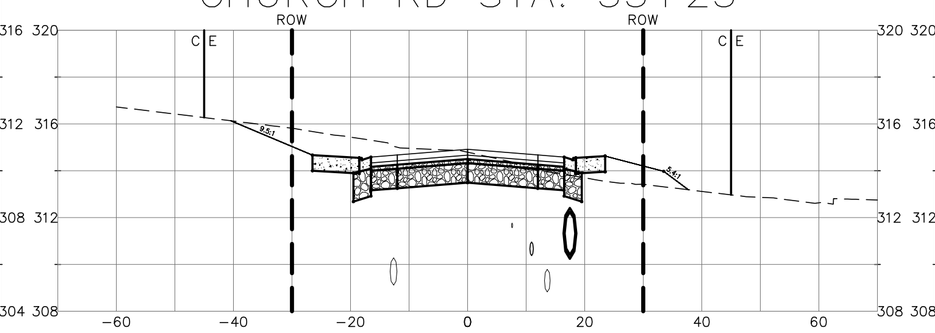

CHURCH RD STA. 36+25

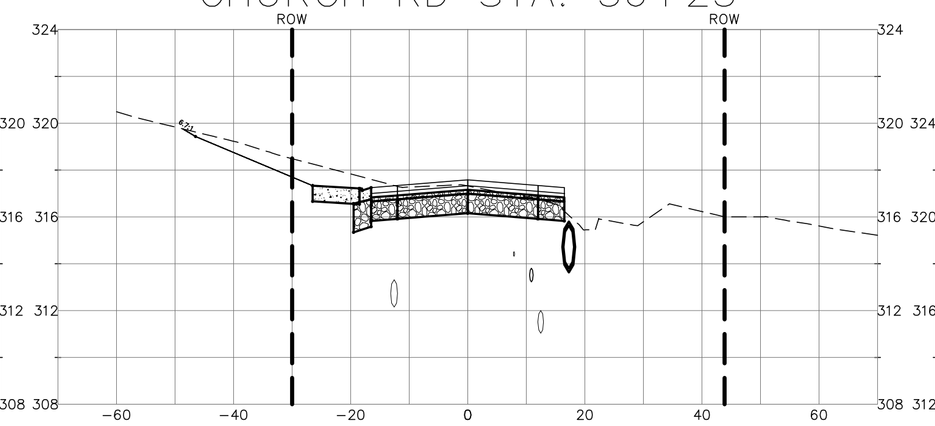

CHURCH RD STA. 37+25

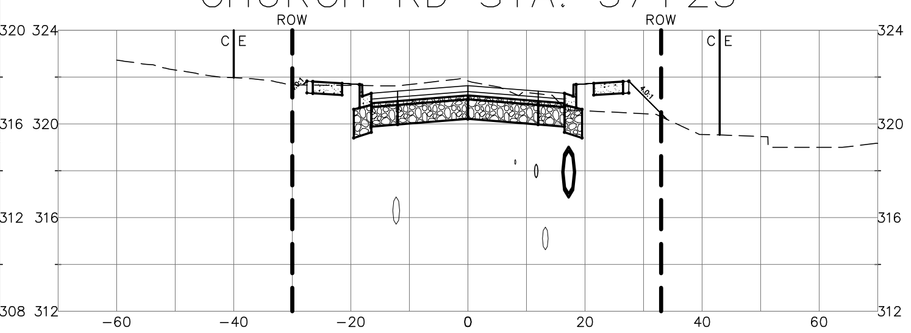

CHURCH RD STA. 36+00

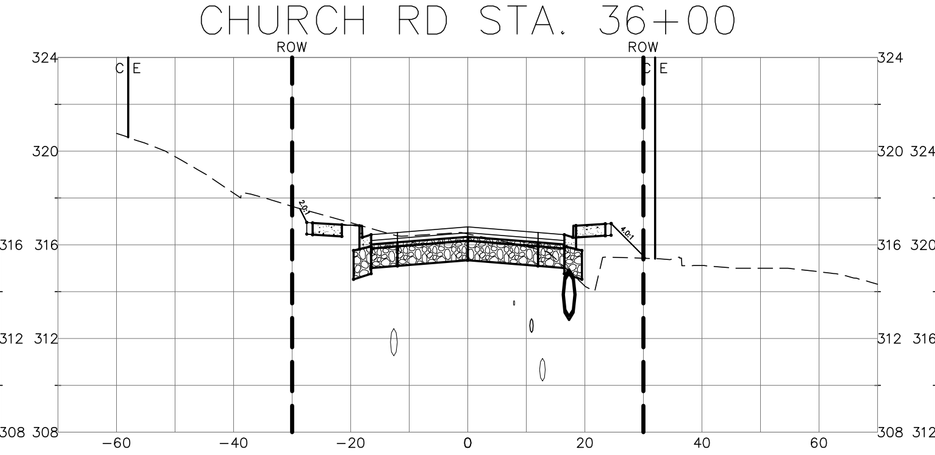

CHURCH RD STA. 34+00

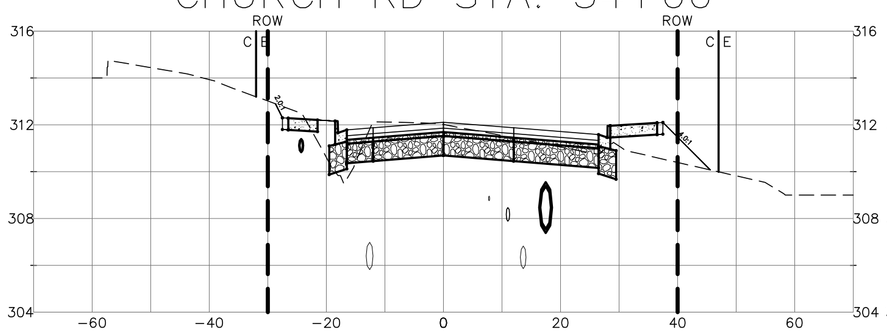

CHURCH RD STA. 35+00

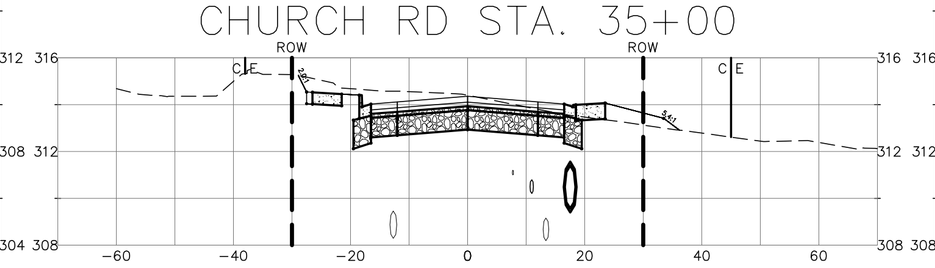

CHURCH RD STA. 37+00

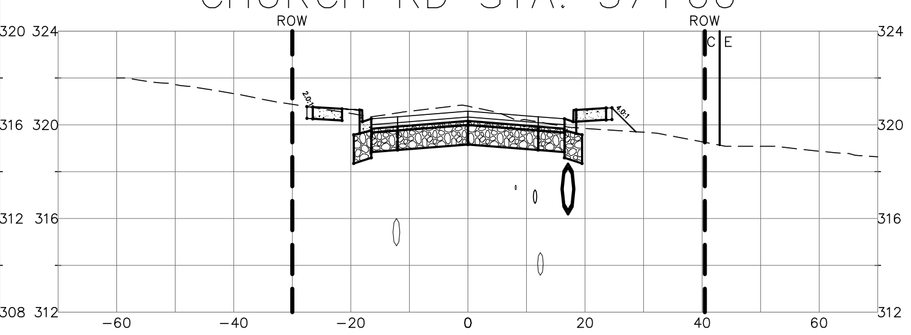

CHURCH RD STA. 35+75

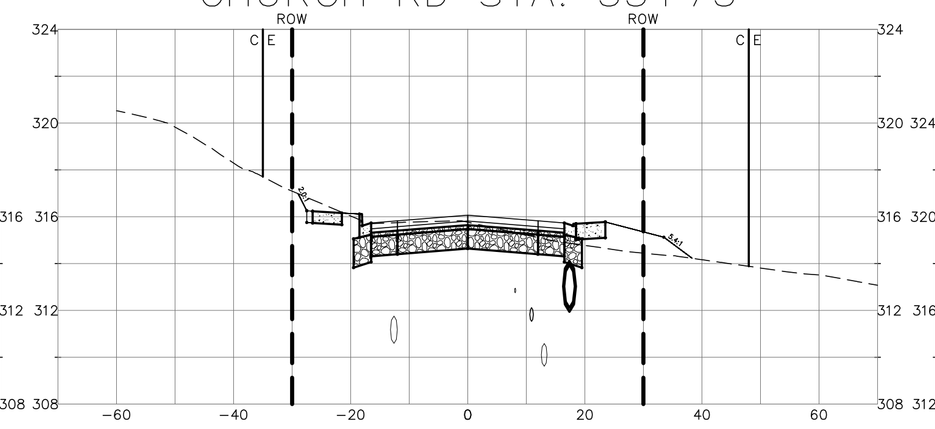

CHURCH RD STA. 33+75

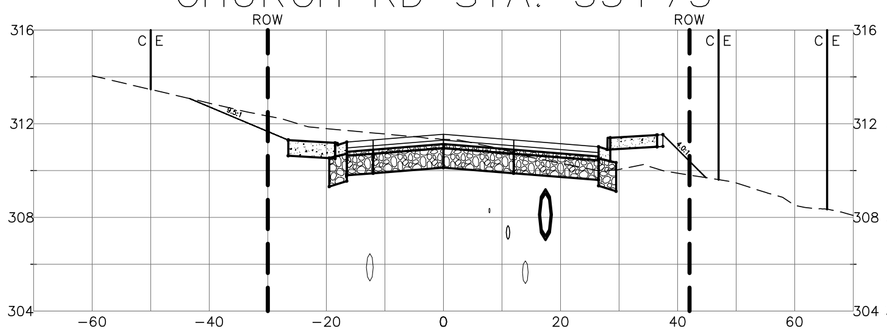

CHURCH RD STA. 34+75

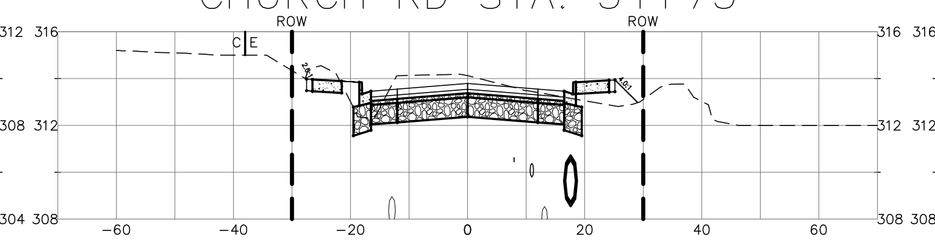

CHURCH RD STA. 36+75

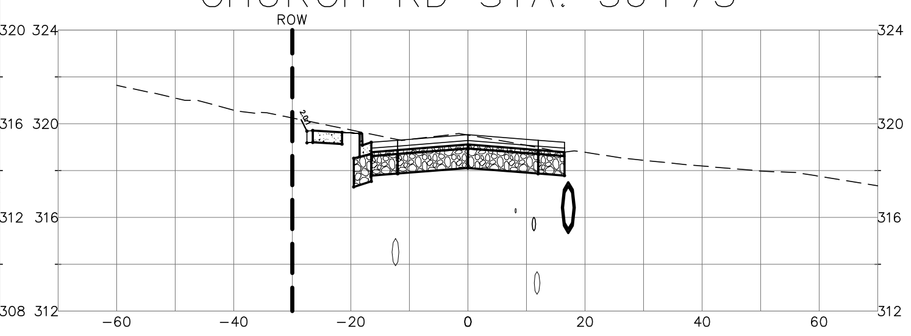

LUIS PONCE
STATE OF WASHINGTON
38378
REGISTERED
PROFESSIONAL ENGINEER
1/6/17

00616.058 4/17/17 KJ

1/05/17 **AS-BUILT**

DESIGNED BY	LP/GKG
DRAWN BY	LMC
CHECKED BY	LP

REICHHARDT & EBE
ENGINEERING, INC.
CONSULTING ENGINEERS
PO Box 978 423 Front St., Ste 201 Lynden, Washington 98264
Ph (360) 354-3687 Fax (360) 354-0407

NO.	DATE	REVISION	BY

CITY OF FERNDALE
2095 MAIN STREET
FERNDALE, WA 98248

CHURCH ROAD
STREET IMPROVEMENTS
CROSS SECTIONS

JOB# / DWG	DATE
AB07037 ALIGN_PROFILE	1-5-17
SCALE H:1"=20' V:1"=5'	SHEET 58 of 64

P:\Projects\07037\dwg\CD\ AS BUILT-CONSTRUCTION\Plan Sheets\AB07037 align_profile.dwg, 3/17/2017 1:57:38 PM

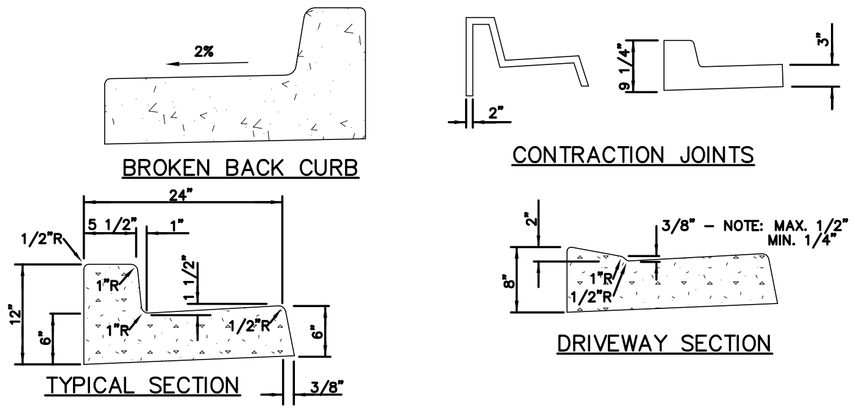

NOTES:
CONTRACTION JOINTS OF ONE OF THE TYPES SHOWN ABOVE TO BE PLACED 10' C/C. JOINTS COMPLETELY SEVER THE STRUCTURE TO THE POINTS SHOWN. JOINTS MAY BE MADE BY INSERTING MIN. 3/16" BITUMINOUS FILLER DUMMY JOINTS. JOINTS SHALL BE CLEANED AND EDGED

3/4" EXPANSION JOINTS TO BE PLACED AT DRIVEWAY SECTIONS, CURB RETURNS, CURB RAMPS AND COLD JOINTS OR A MAX. OF 80' C/C. EXPANSION JOINTS SHALL PROTRUDE 1" BELOW THE BOTTOM OF THE GUTTER.

CURB DRAINS SHALL BE CONSTRUCTED OF 2" PVC PIPE OR OTHER MATERIAL SUBJECT TO APPROVAL OF THE ENGINEER, CUT TO LENGTH TO PASS FROM THE BACK OF CURB THROUGH THE CURB TO THE FACE OF THE CURB AT THE GUTTER LINE. SPACING WILL BE MAXIMUM OF 50 FEET, CENTER TO CENTER, AND/OR EACH SIDE OF THE DRIVEWAYS AND AT SUCH LOCATIONS AS DESIGNATED BY THE ENGINEER.

CURB AND GUTTER DETAILS

NTS

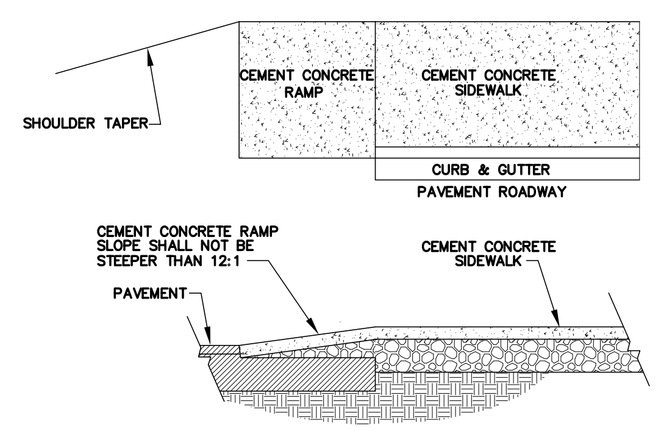

CEMENT CONCRETE SIDEWALK RAMP DETAIL

NTS

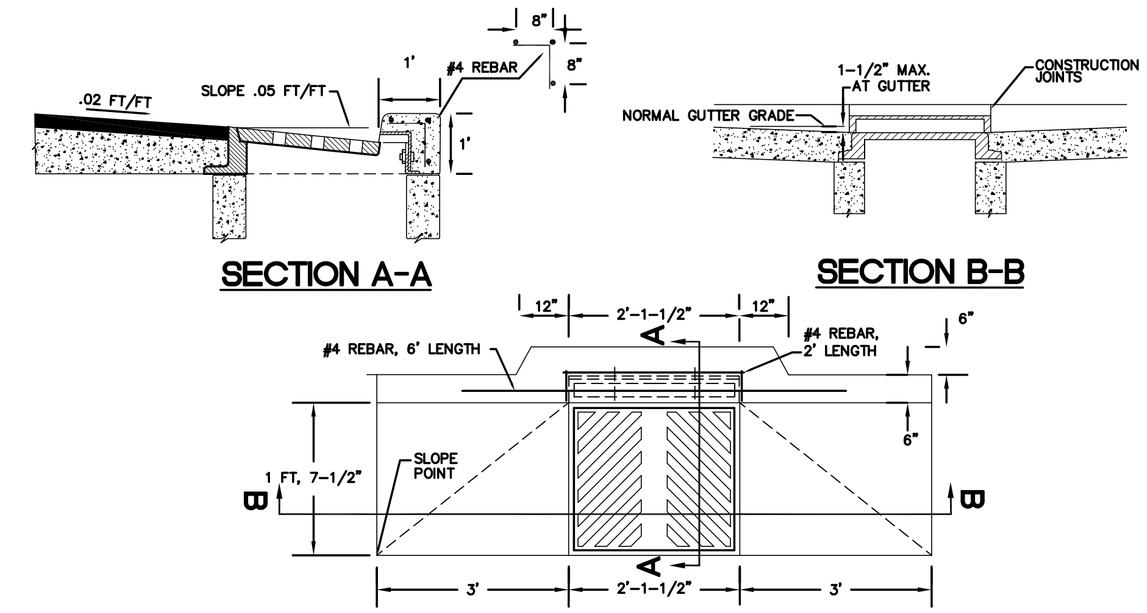

THRU CURB INLET DETAIL

NTS

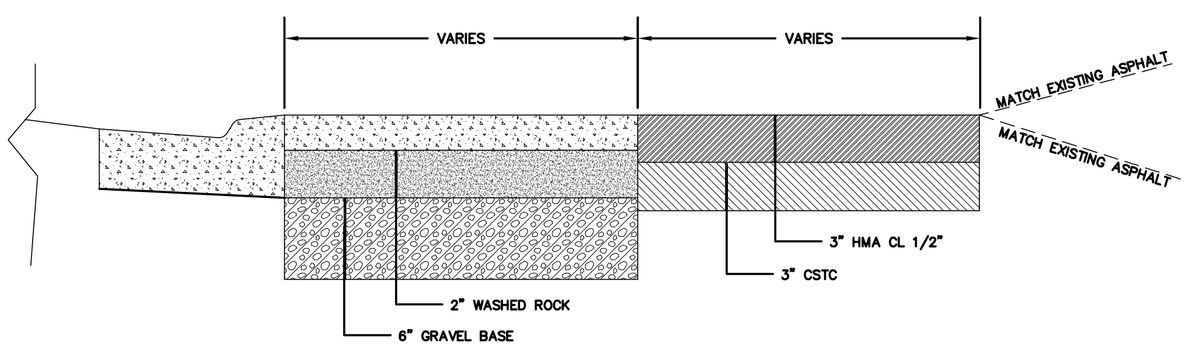

PROPOSED ASPHALT APRON AND ASPHALT SECTION

NTS

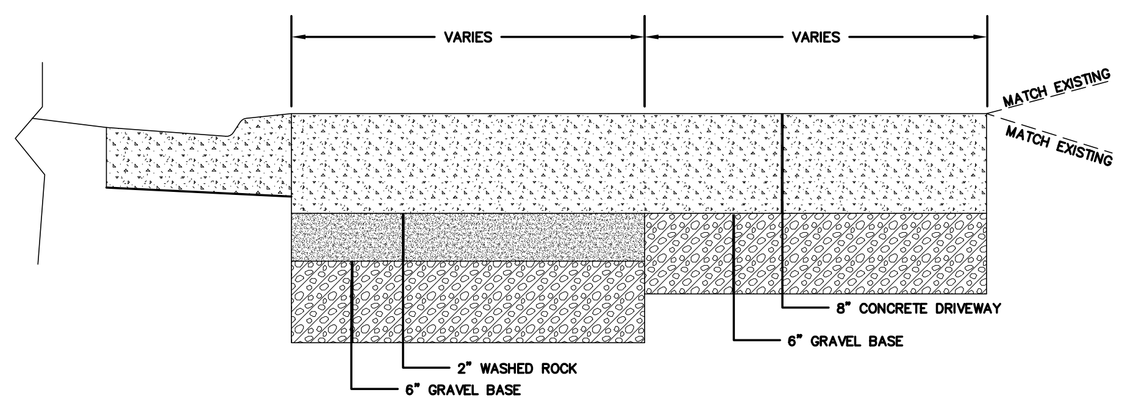

PROPOSED CONCRETE DRIVEWAY SECTION

NTS

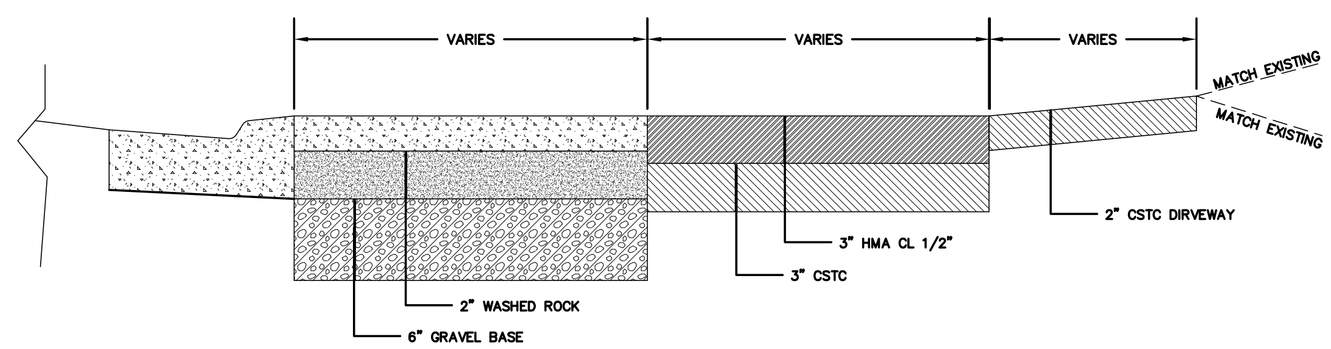

PROPOSED ASPHALT APRON AND GRAVEL SECTION

NTS

NOTES:
ALL FRAMES, COVERS AND VALVE BOXES SHALL BE ADJUSTED TO FINISHED GRADE AFTER THE FINAL LIFT OF PAVING HAS BEEN COMPLETED. THE FOLLOWING PROCEDURE SHALL BE USED:

1. CUT THE ASPHALT IN AN EVEN CIRCLE AROUND THE STRUCTURE CASTING TO BE ADJUSTED.
2. REMOVE THE FILL MATERIAL WITHIN THE CUT PAVEMENT AREA TO 8 INCHES MIN. BELOW FINISH GRADE.
3. PLACE THE CASTING AT FINISH GRADE.
4. PLACE PORTLAND CEMENT CONCRETE TO WITHIN THE TOP 2 INCHES OF FINISH GRADE.
5. APPLY TACK TO THE STRUCTURE CASTING, CUT PAVEMENT, AND PC CONCRETE.
6. PLACE AND COMPACT 2 INCHES OF HMA TO FINISH GRADE.
7. SEAL PAVEMENT JOINTS WITH HOT AR4000 AND TOP WITH SAND.

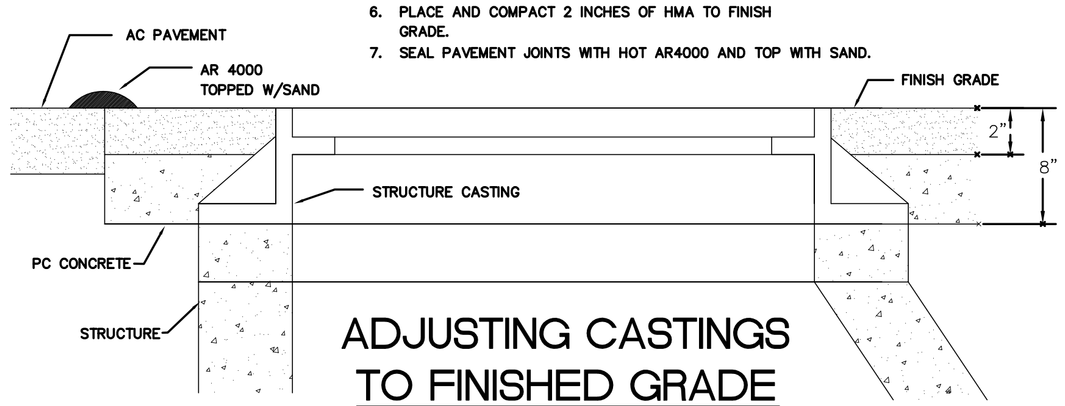

ADJUSTING CASTINGS TO FINISHED GRADE

NTS

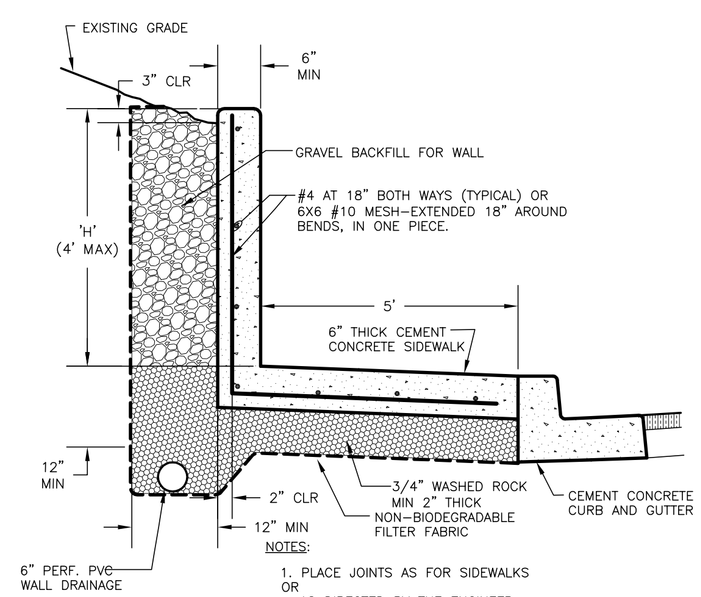

NOTES:

1. PLACE JOINTS AS FOR SIDEWALKS OR AS DIRECTED BY THE ENGINEER.
2. 'H' TO BE AS DIRECTED BY ENGINEER. REBAR NOT REQUIRED FOR WALL PLACED ON LIGHT BASES OR WHERE 'H'<14".
3. ¾" CHAMFER AT EXPOSED CORNERS.

TYPE "A" MONOLITHIC RETAINING WALL AND SIDEWALK (TYP)

NTS

LUIS PONCE
SEAL OF WASHINGTON
38378
REGISTERED PROFESSIONAL ENGINEER
1/5/17

SUBMITTED WITH DESIGN PLAN	DESIGNED BY LP/GKG DRAWN BY LMC CHECKED BY LP	R&E REICHHARDT & EBE ENGINEERING, INC. CONSULTING ENGINEERS PO Box 978 423 Front St., Ste 201 Lynden, Washington 98264 Ph (360) 354-3687 Fax (360) 354-0407	NO. / DATE / REVISION / BY	CITY OF FERNDALE 2095 MAIN STREET FERNDALE, WA 98248	CHURCH ROAD STREET IMPROVEMENTS DETAIL SHEET	JOB# / DWG 07037 DET SCALE H: n/a V: n/a	DATE 1-5-17 SHEET 59 of 64

P:\Projects\07037\dwg\CD AS BUILT-CONSTRUCTION\Plan Sheets\AR 07037_DET-CONST.dwg, 3/17/2017 1:58:20 PM

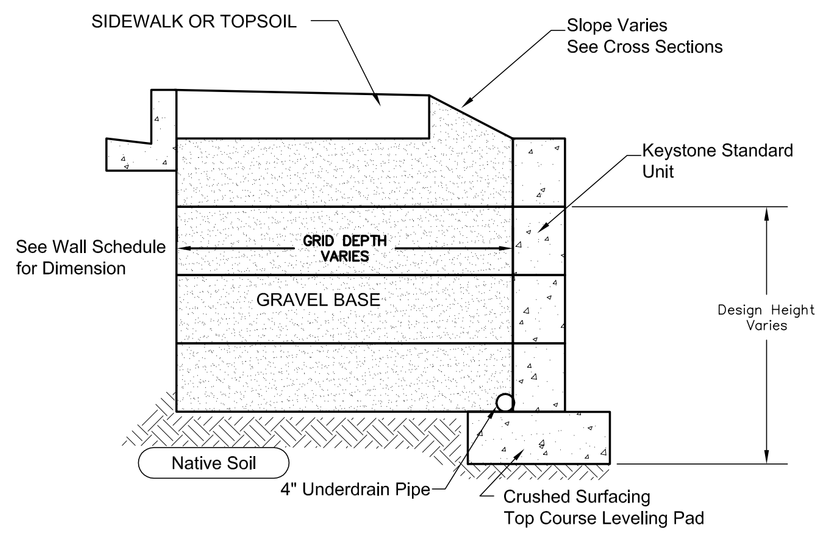

Typical Reinforced Wall Section

Compac Unit

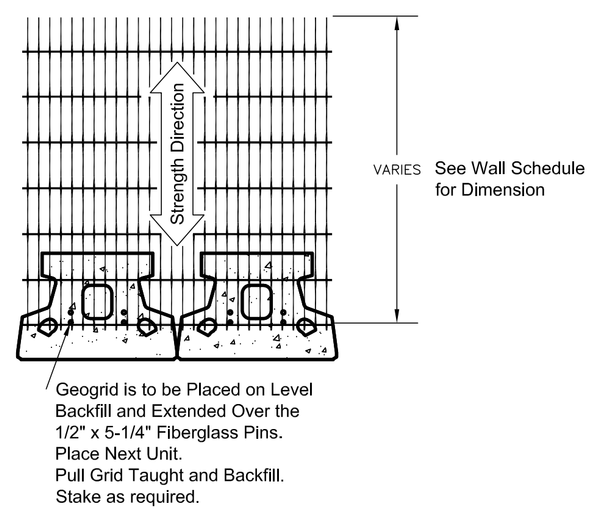

Grid & Pin Connection

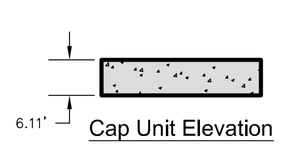

Cap Unit Elevation

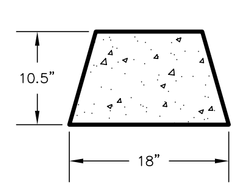

Cap Unit Plan

Universal
Cap Unit Option

* Dimensions & Availability Will Vary by Region

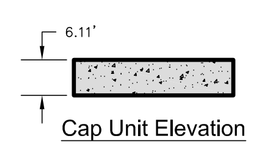

Cap Unit Elevation

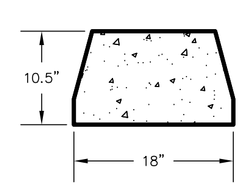

Cap Unit Plan

Straight Split
Cap Unit Option

* Dimensions & Availability Will Vary by Region

BLOCK WALL RETAINING WALL

NTS

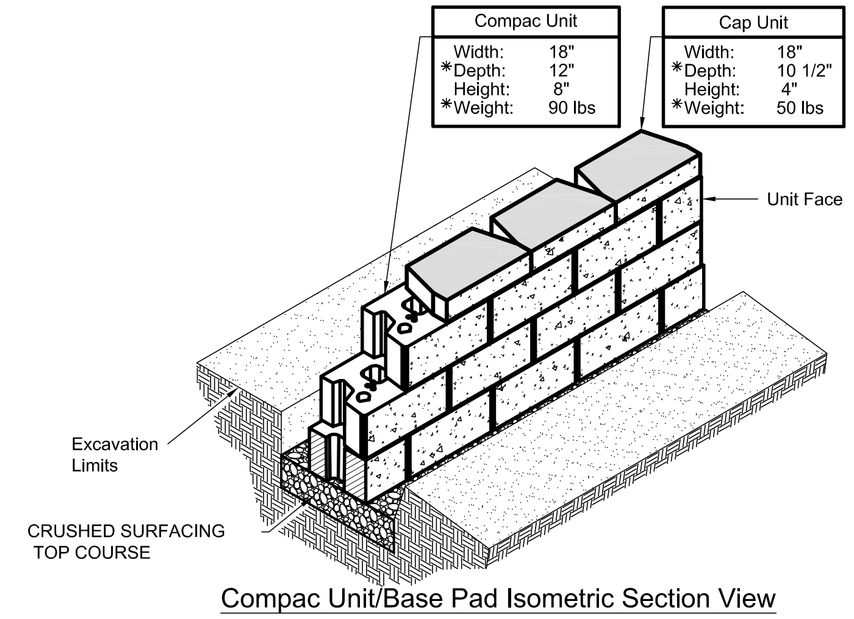

Compac Unit/Base Pad Isometric Section View

* Dimensions & Weight May Vary by Region

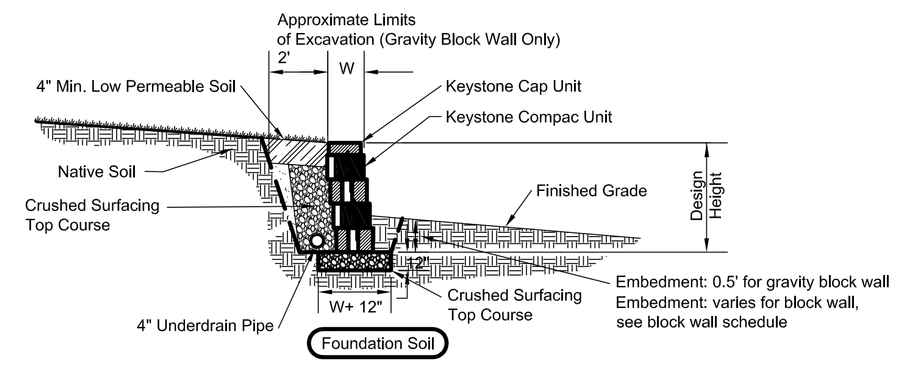

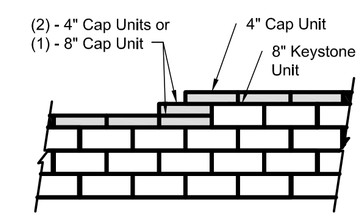

Note:
1. Secure all cap units with Keystone Kapseal or equal.

Top of Gravity and Block Wall Steps

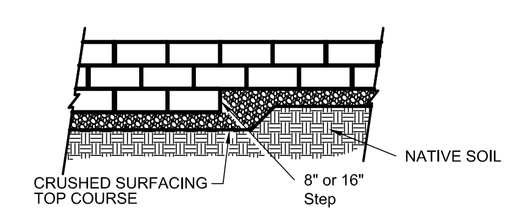

Elevation
TYPICAL GRAVITY AND BLOCK WALL

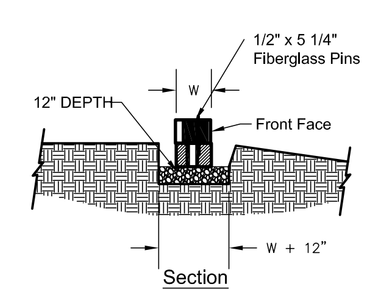

Section

Leveling Pad Detail

TYPICAL GRAVITY AND BLOCK WALL

NTS

LUIS PONCE
STATE OF WASHINGTON
38378
REGISTERED PROFESSIONAL ENGINEER
1/5/17

00616.060 4/17/17 KJ

SUBMITTED WITH DESIGN PLAN	DESIGNED BY LP/GKG DRAWN BY LMC CHECKED BY LP	REICHHARDT & EBE ENGINEERING, INC. CONSULTING ENGINEERS PO Box 978 423 Front St., Ste 201 Lynden, Washington 98264 Ph (360) 354-3687 Fax (360) 354-0407	NO. / DATE / REVISION / BY	CITY OF FERNDALE 2095 MAIN STREET FERNDALE, WA 98248	CHURCH ROAD STREET IMPROVEMENTS DETAIL SHEET	JOB# / DWG 07037 DET SCALE H: n/a V: n/a	DATE 1-5-17 SHEET 60 of 64

P:\Projects\07037\dwg\CD AS BUILT-CONSTRUCTION\Plan Sheets\AB 07037_DET-CONST.dwg, 3/17/2017 1:58:40 PM

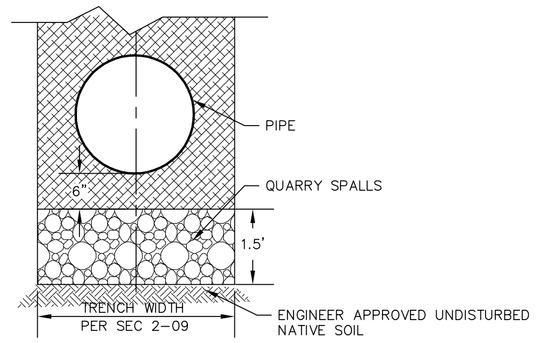

REMOVAL OF UNSUITABLE MATERIALS INC HAUL TYPICAL SECTION

NTS

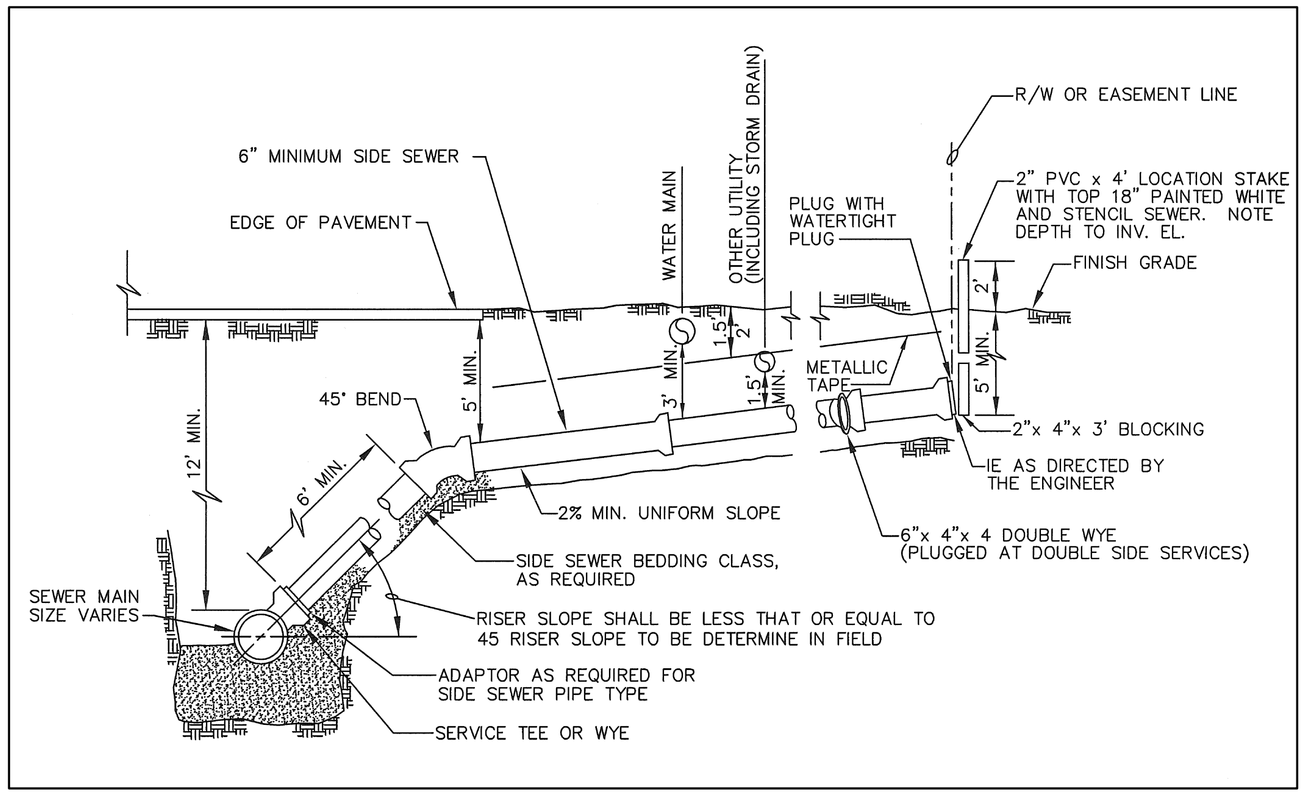

SANITARY SEWER SIDE SERVICE INSTALLATION, DEEP MAINS

NTS

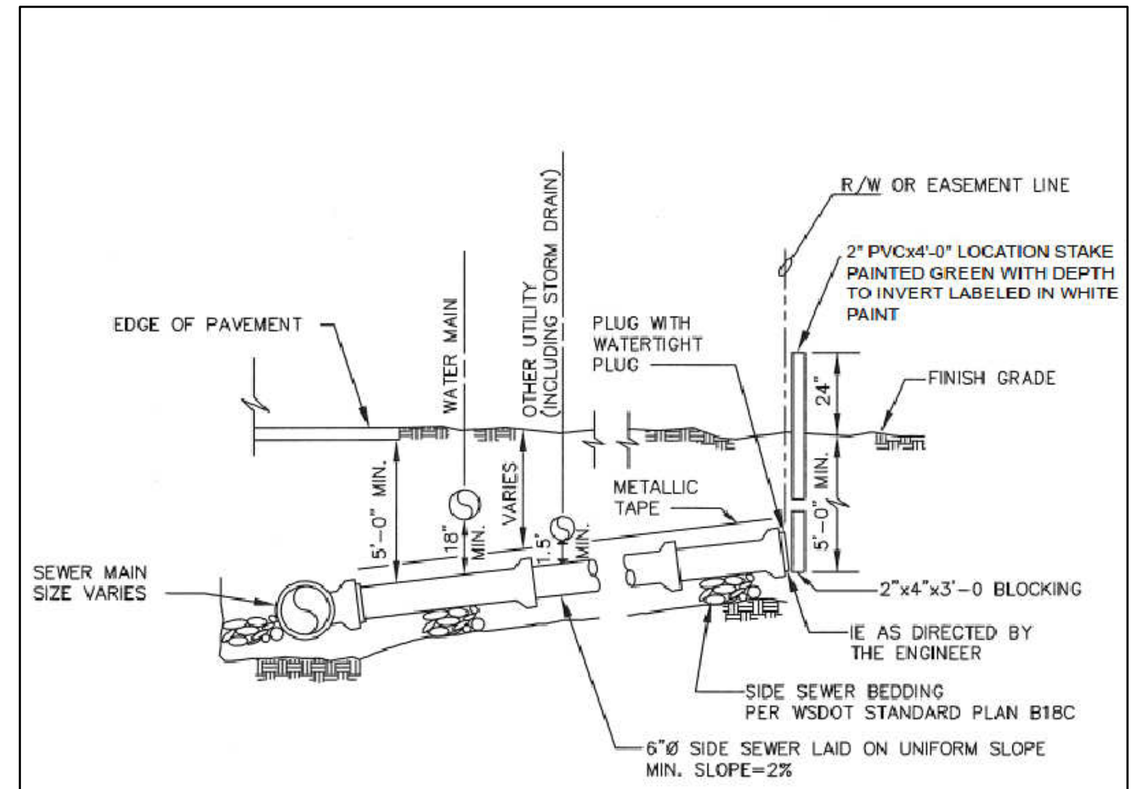

15" AND SMALLER SEWER INSTALLATION

NTS

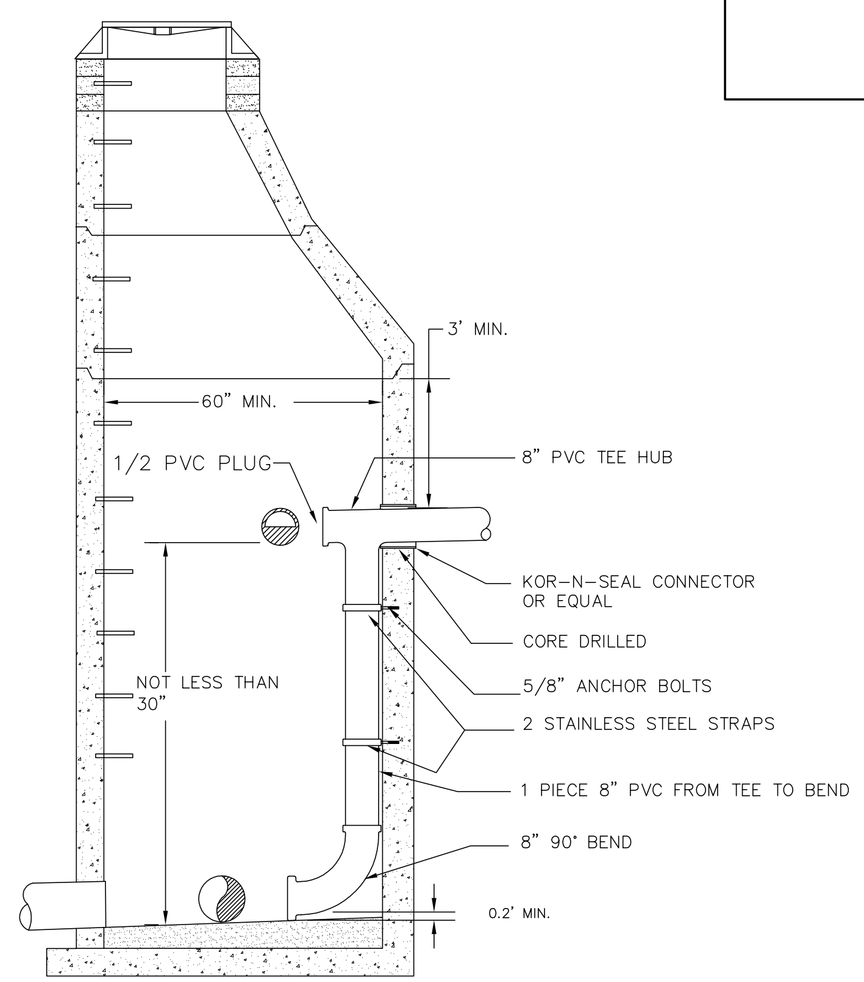

NOTES:

1. DROP TEE TO BE INSTALLED MINIMUM OF 3' BELOW CONE SECTION.
2. INSIDE DROP MANHOLE SHALL BE INSTALLED ONLY WHERE APPROVED BY THE CITY.
3. SIZE OF MANHOLE WILL INCREASE WITH LARGER DIAMETER PIPE AND SHALL BE APPROVED BY THE ENGINEER.
4. CHANNEL TO OUTLET.

INSIDE DROP SEWER MANHOLE CONNECTION

NTS

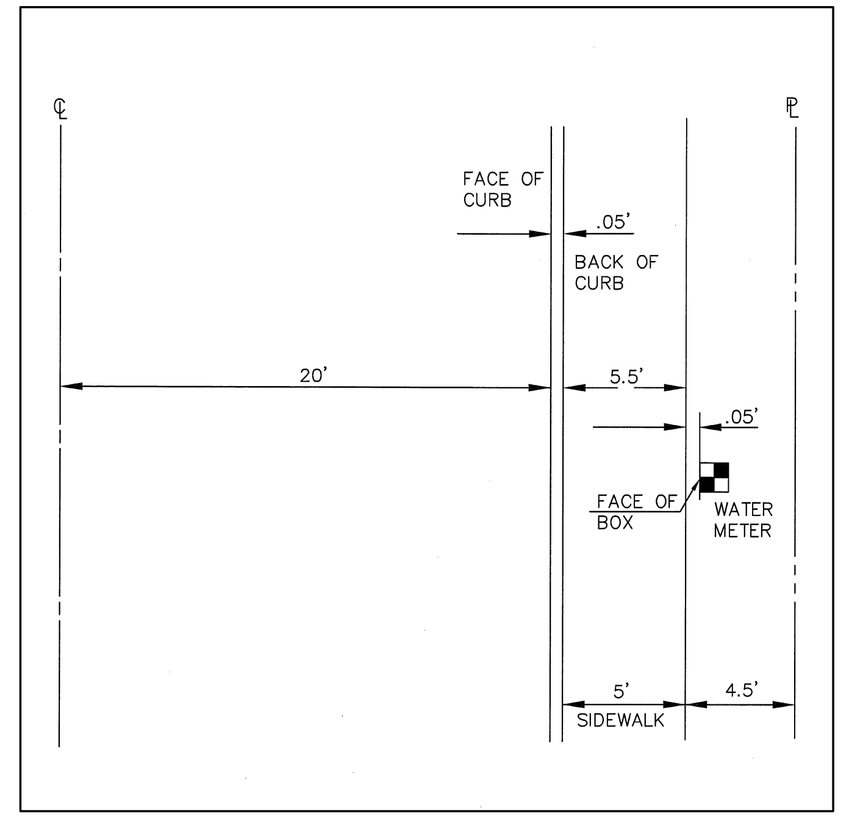

WATERMETER LOCATION DETAIL

NTS

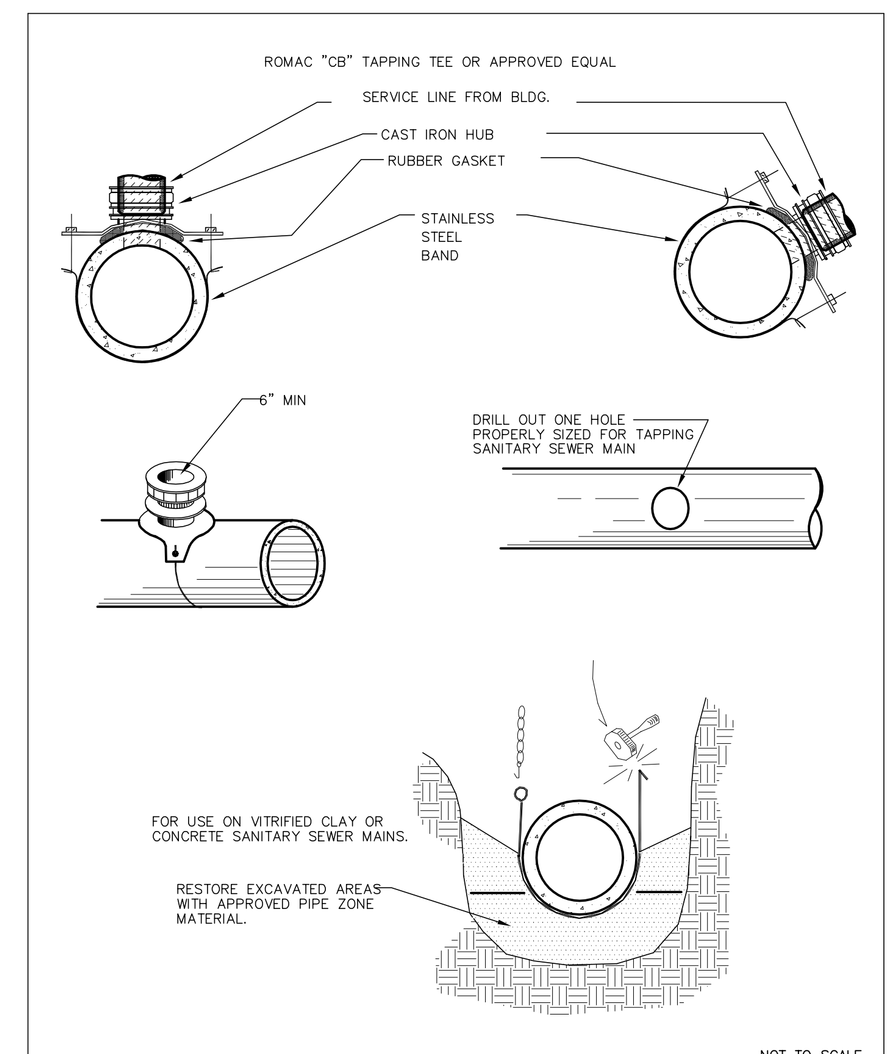

NOT TO SCALE

APPROVED	CITY OF FERNDALE SANITARY SEWER BANDED TAPPING TEE	DRAWING SS-12
Public Works Director — Date (JULY 2001)		

LUIS PONCE — STATE OF WASHINGTON — 38378 — REGISTERED PROFESSIONAL ENGINEER — 1/6/17

00616.061 4/17/17 KJ

SUBMITTED WITH DESIGN PLAN	DESIGNED BY LP/GKG DRAWN BY LMC CHECKED BY LP	R&E REICHHARDT & EBE ENGINEERING, INC. CONSULTING ENGINEERS PO Box 978 423 Front St., Ste 201 Lynden, Washington 98264 Ph (360) 354-3687 Fax (360) 354-0407	NO. / DATE / REVISION / BY	CITY OF FERNDALE 2095 MAIN STREET FERNDALE, WA 98248	CHURCH ROAD STREET IMPROVEMENTS DETAIL SHEET	JOB# / DWG 07037 DET SCALE H: n/a V: n/a	DATE 1-5-17 SHEET 61 of 64

P:\Projects\07037\dwg\CD AS BUILT-CONSTRUCTION\Plan Sheets\AB 07037_DET-CONST.dwg, 3/17/2017 1:59:01 PM

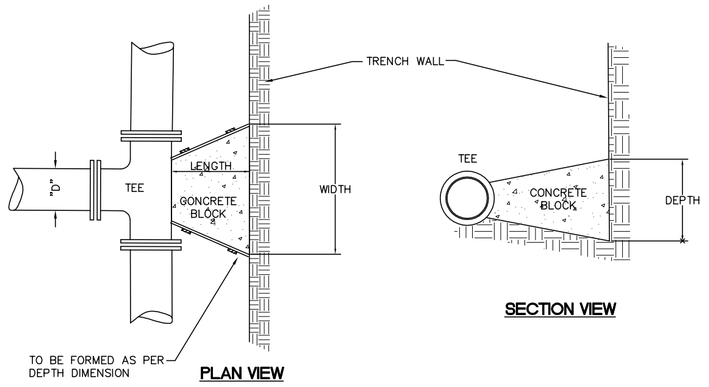

"D"	WIDTH	DEPTH	LENGTH	VOL.
6"	1'-6"	1'-6"	12"	3.0
8"	2'-0"	2'-0"	12"	4.5
10"	2'-6"	2'-6"	12"	7.0
12"	3'-0"	3'-0"	18"	14.0

VOL. = Approx. Volume of Blocking Material Required in cu. ft.

SOIL BEARING CAPACITY 1500 PSF MINIMUM
100 P.S.I. OPERATING PRESSURE

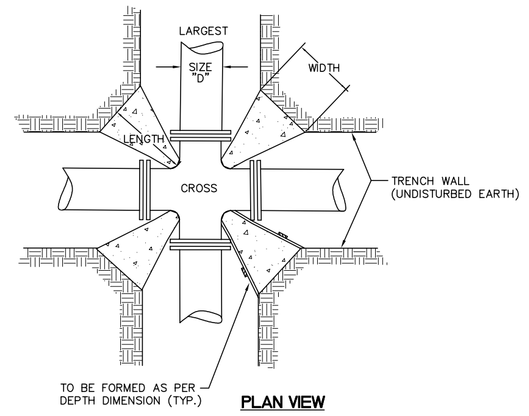

"D"	WIDTH	DEPTH	LENGTH	VOL.	X4 blocks/joint
6"	1'-0"	1'-0"	12"	0.63	2.50 cu ft
8"	1'-3"	1'-3"	12"	1.00	4.01 cu ft
10"	1'-6"	1'-6"	12"	1.63	6.50 cu ft
12"	1'-9"	1'-9"	18"	3.05	12.19 cu ft

VOL. = Approx. Volume of Blocking Material Required in cu. ft.

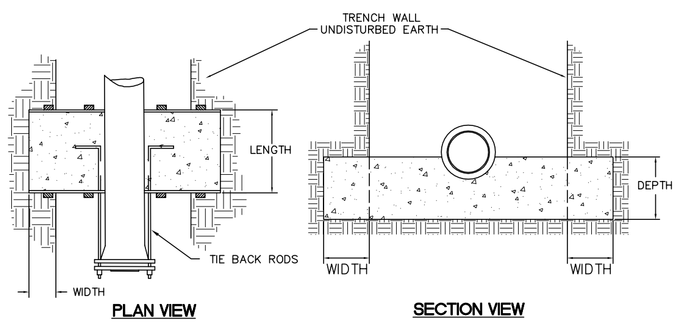

"D"	WIDTH	DEPTH	LENGTH	*VOL.	# OF RODS	ROD DIA.
6"	1'-6"	1'-6"	12"	7.5	2	1/2"
8"	2'-0"	2'-0"	18"	20.0	2	5/8"
10"	2'-6"	2'-6"	24"	37.5	2	3/4"
12"	2'-9"	2'-9"	24"	44.0	4	3/4"

*VOL. = Approx. Volume of Blocking Material Required in cu. ft.
RODS: A36 STEEL MINIMUM

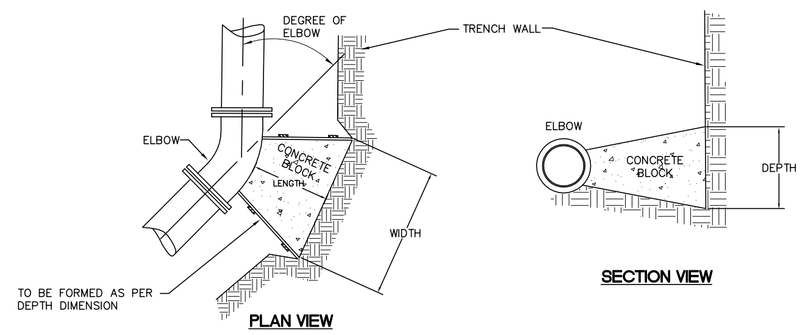

SIZE	LENGTH	11 1/4°			22 1/2°			45°			90°		
		WIDTH	DEPTH	VOL.	WIDTH	DEPTH	VOL.	WIDTH	DEPTH	VOL.	WIDTH	DEPTH	VOL.
6"	12"	1'-0"	1'-0"	0.63	1'-0"	1'-0"	0.63	1'-6"	1'-6"	1.25	2'-3"	1'-6"	1.88
8"	12"	1'-3"	1'-3"	1.00	1'-3"	1'-3"	1.00	1'-9"	1'-9"	1.75	3'-0"	2'-0"	3.33
10"	12"	1'-9"	1'-6"	1.72	1'-9"	1'-6"	1.72	2'-3"	2'-3"	2.88	3'-6"	2'-6"	4.861
12"	18"	2'-0"	1'-9"	3.48	2'-0"	1'-9"	3.48	2'-9"	2'-6"	5.98	4'-0"	3'-0"	10.00

VOL. = Approx. Volume of Blocking Material Required in cu. ft.

THRUST BLOCKING

NTS

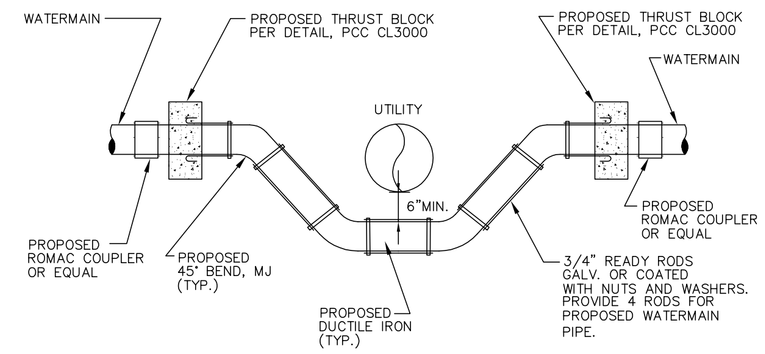

WATERMAIN STOVEPIPE

NTS

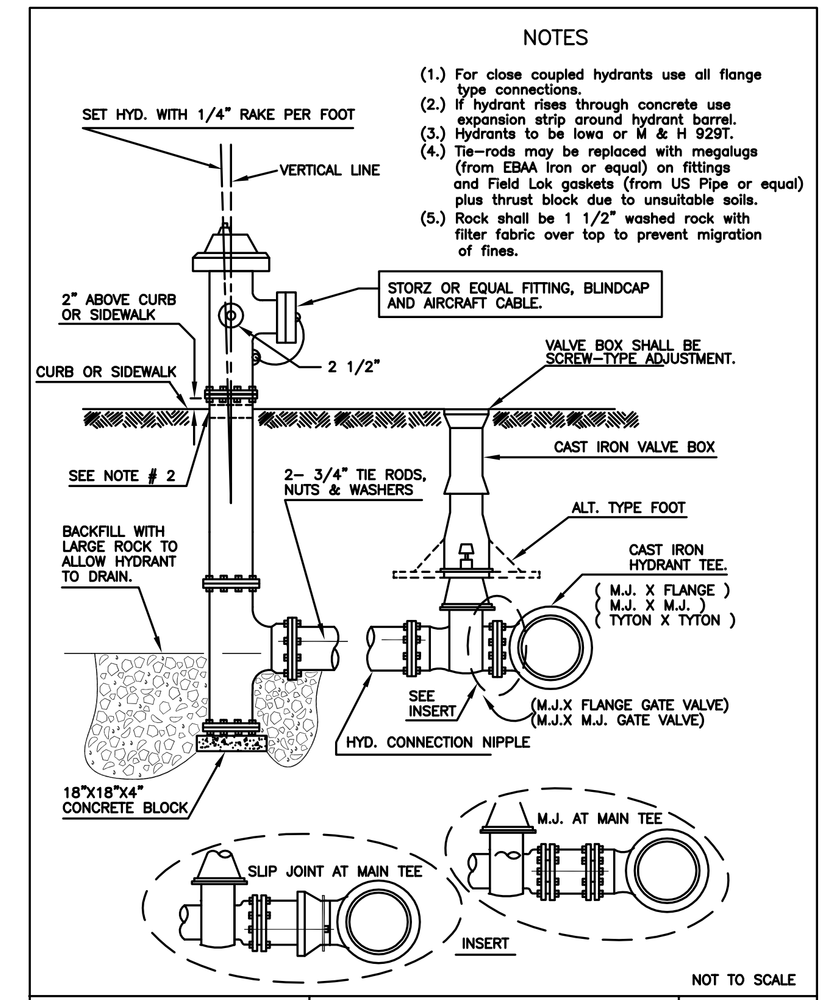

APPROVED		CITY OF FERNDALE	DRAWING
Public Works Director	Date	FIRE HYDRANT ASSEMBLY	W-1

JULY 2001

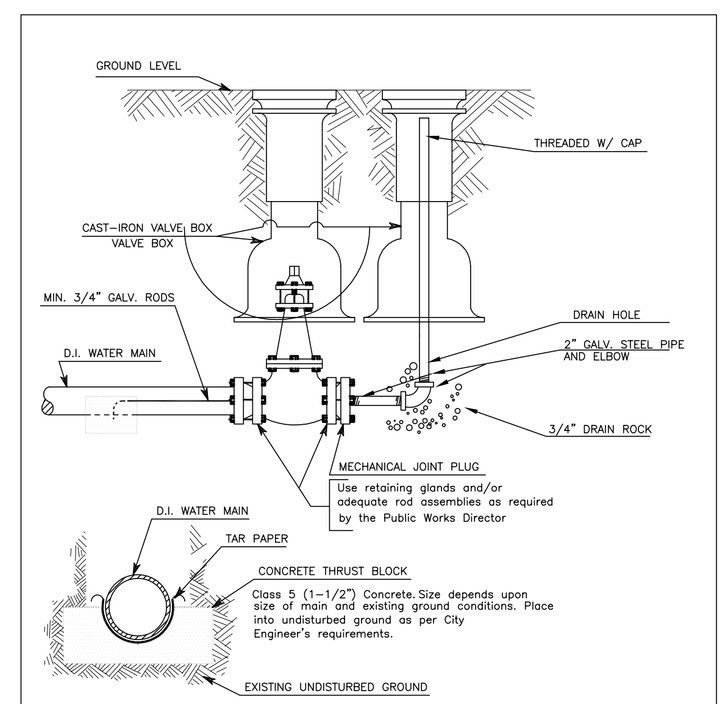

2" blow-off to be used where the main will be extended in the future. For mains with no further extention, refer to 2" blowoff, non-extendable main.

NOT TO SCALE

APPROVED		CITY OF FERNDALE	DRAWING
Public Works Director	Date	2" BLOW-OFF WATER MAIN EXTENSION	W-9

JULY 2001

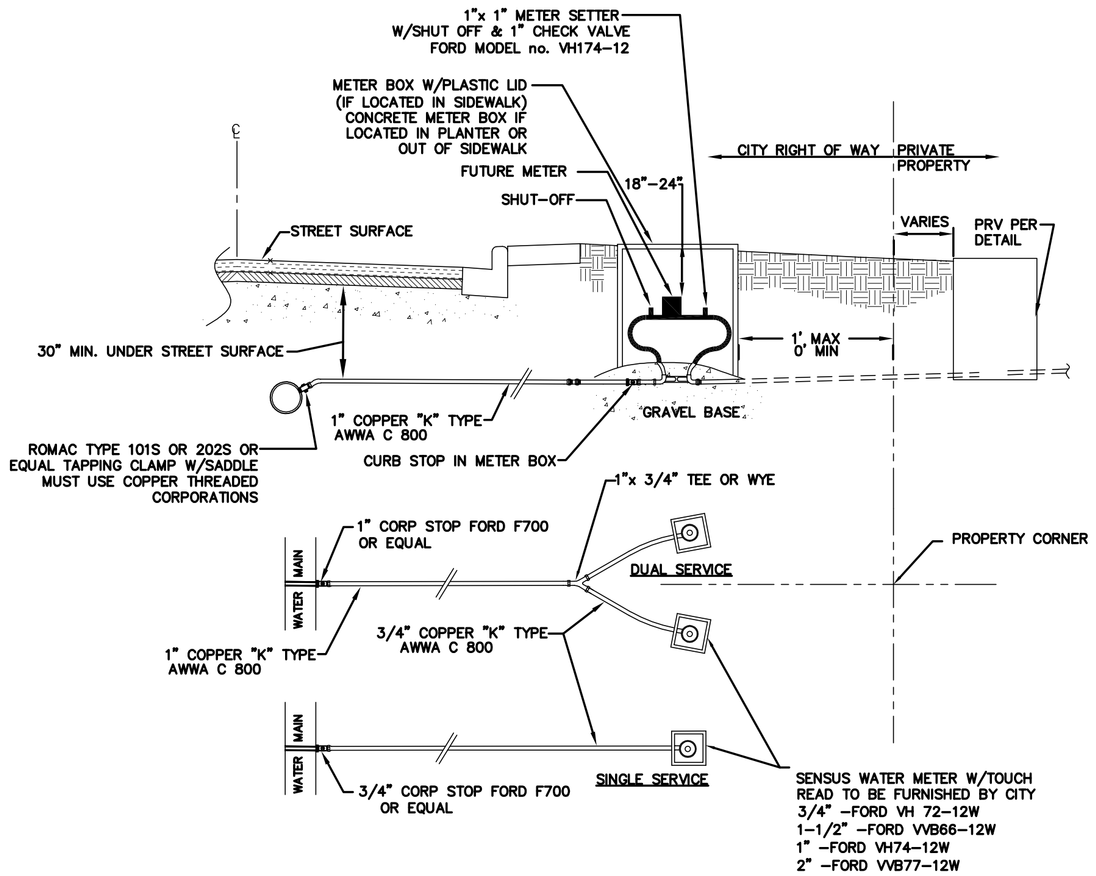

WATER SERVICE CONNECTION DETAIL

NTS

00616.062 4/17/17 KJ

LUIS PONCE
STATE OF WASHINGTON
38378
REGISTERED PROFESSIONAL ENGINEER
1/5/17

SUBMITTED WITH DESIGN PLAN	DESIGNED BY LP/GKG DRAWN BY LMC CHECKED BY LP	R&E REICHHARDT & EBE ENGINEERING, INC. CONSULTING ENGINEERS PO Box 978 423 Front St., Ste 201 Lynden, Washington 98264 Ph (360) 354-3687 Fax (360) 354-0407	NO. / DATE / REVISION / BY	CITY OF FERNDALE 2095 MAIN STREET FERNDALE, WA 98248	CHURCH ROAD STREET IMPROVEMENTS DETAIL SHEET	JOB# / DWG 07037 DET SCALE H: n/a V: n/a	DATE 1-5-17 SHEET 62 of 64

P:\Projects\07037\dwg\CD AS BUILT-CONSTRUCTION\Plan Sheets\AB 07037_DET-CONST.dwg, 3/17/2017 1:59:21 PM

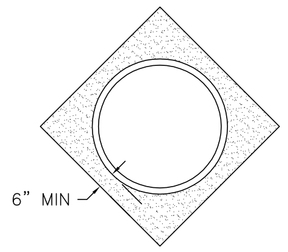

NOTES:
ALL FRAMES, COVERS & VALVE BOXES SHALL BE ADJUSTED TO FINISHED GRADE AFTER THE FINAL LIFT OF PAVING HAS BEEN COMPLETED. THE FOLLOWING PROCEDURE SHALL BE USED:

1. CUT THE ASPHALT IN A DIAMOND AROUND THE STRUCTURE CASTING TO BE ADJUSTED.
2. REMOVE THE FILL MATERIAL WITHIN THE CUT PAVEMENT AREA TO 8 INCHES MIN. BELOW FINISH GRADE.
3. PLACE THE CASTING AT FINISH GRADE.
4. PLACE PORTLAND CEMENT CONCRETE TO WITHIN THE TOP 2 INCHES OF FINISH GRADE.
5. APPLY TACK TO THE STRUCTURE CASTING, CUT PAVEMENT, & PC CONCRETE.
6. PLACE & COMPACT 2 INCHES OF COMMERCIAL HMA TO FINISH GRADE.
7. SEAL PAVEMENT JOINTS W/ HOT AR4000 & TOP W/ SAND.

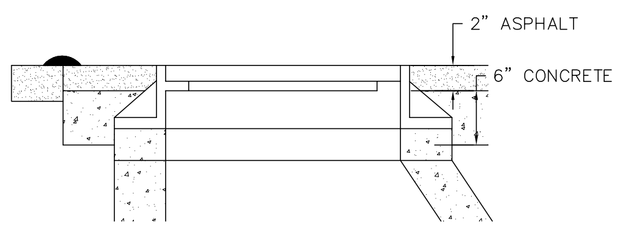

ADJUSTING CASTINGS TO FINISHED GRADE
NTS

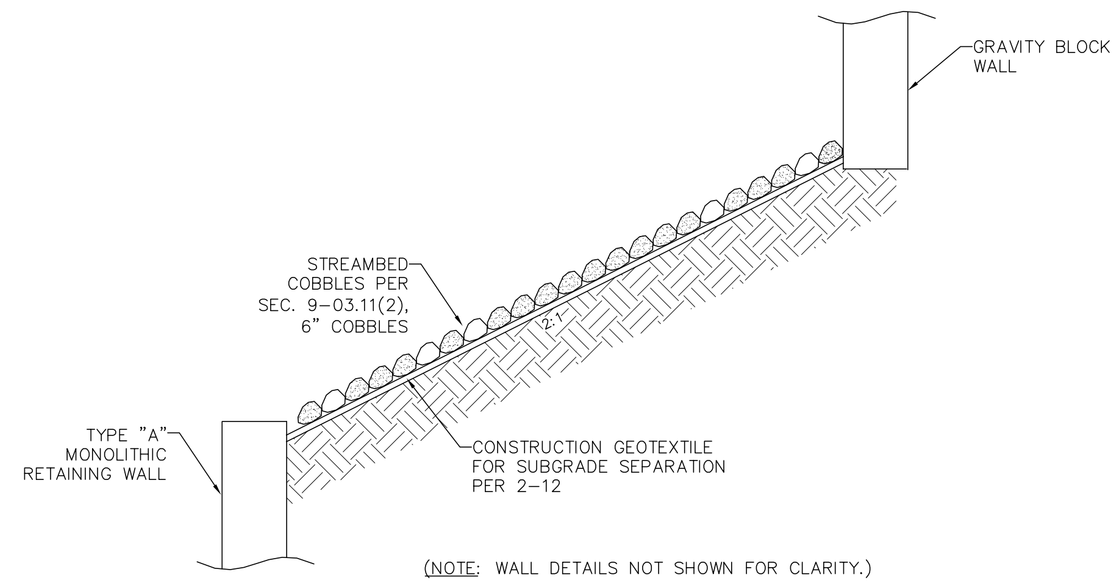

(NOTE: WALL DETAILS NOT SHOWN FOR CLARITY.)

GRAVITY BLOCK WALL STA 15+89.41 LT TO 16+74.75 LT
NTS

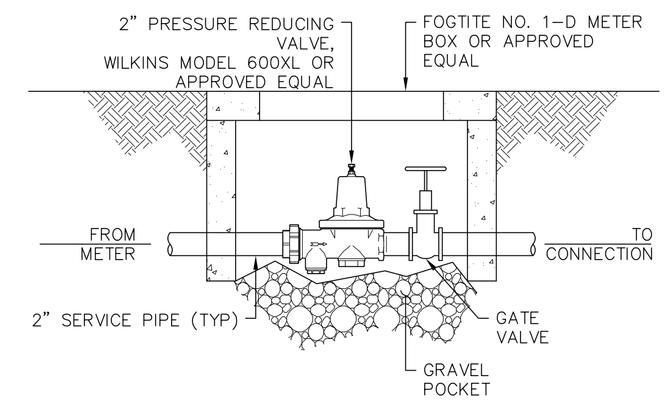

PRESSURE REDUCING VALVE DETAIL
NTS

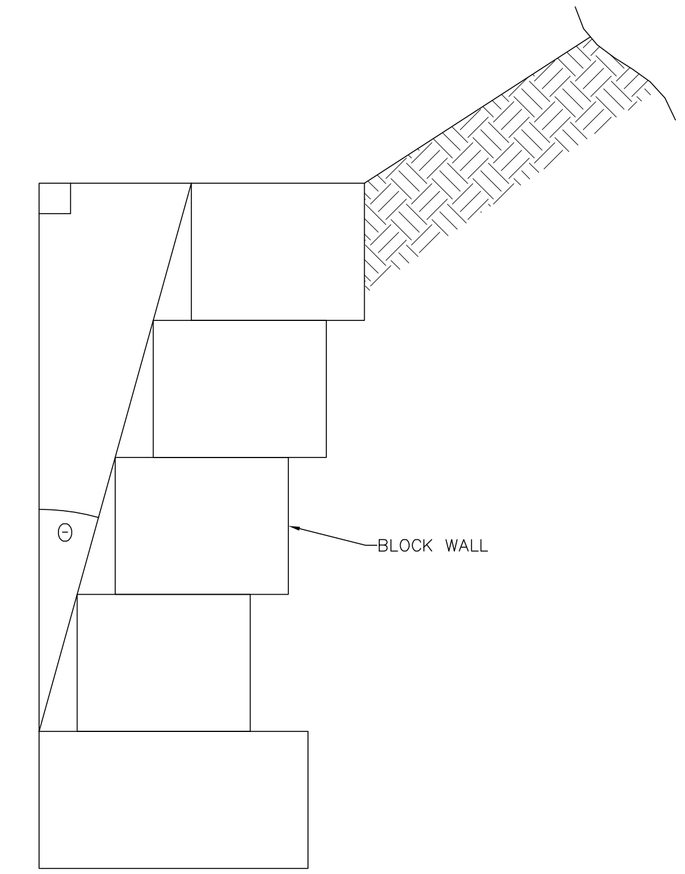

⊖ = 8° FOR BLOCK WALL @ STA 15+89.41 LT TO STA 16+74.75 LT
⊖ = 4° FOR ALL OTHER BLOCK WALLS

(NOTE: WALL DETAILS NOT SHOWN FOR CLARITY.)

TYPICAL BATTER (⊖) AT BLOCK WALLS
NTS

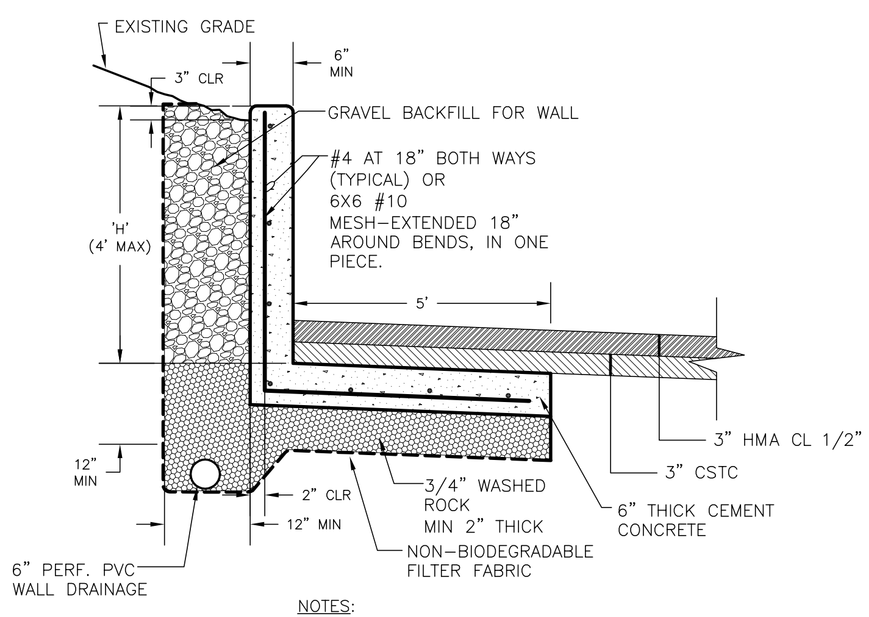

NOTES:
1. PLACE JOINTS AS FOR SIDEWALKS OR AS DIRECTED BY THE ENGINEER.
2. 'H' TO BE AS DIRECTED BY ENGINEER. REBAR NOT REQUIRED FOR WALL PLACED ON LIGHT BASES OR WHERE 'H'<14".
3. ¾" CHAMFER AT EXPOSED CORNERS.

CHURCH RD 15+60 LT MONOLITHIC RETAINING WALL
NTS

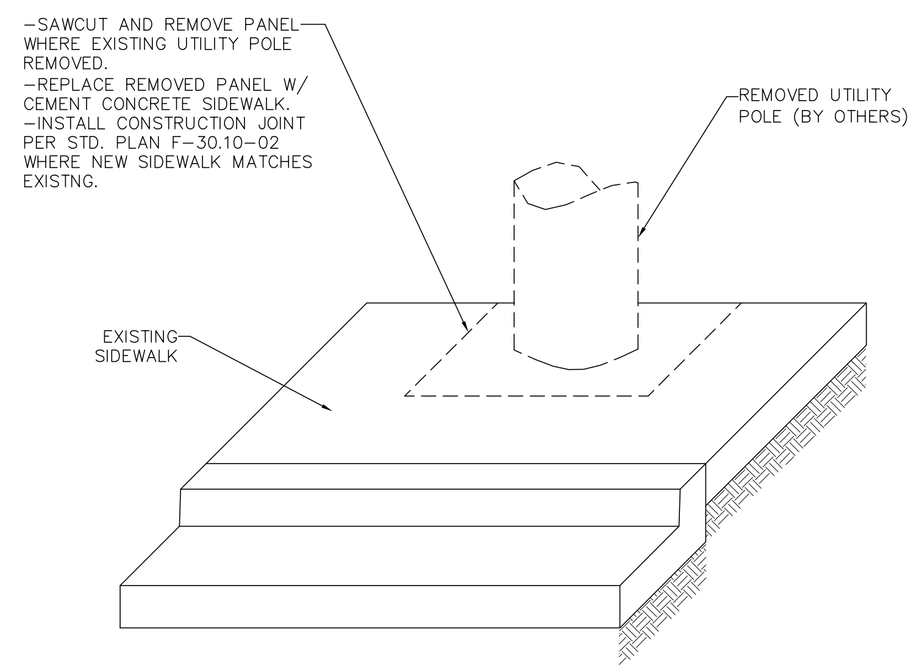

TYPICAL EXISTING SIDEWALK REPAIR AT UTILITY POLE
NTS

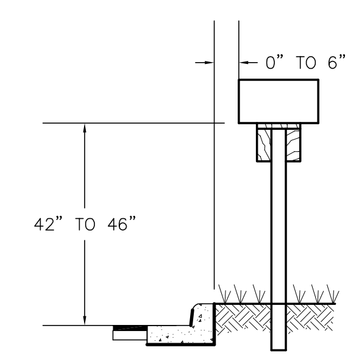

MAILBOX POST DETAIL IN PLANTER
NTS

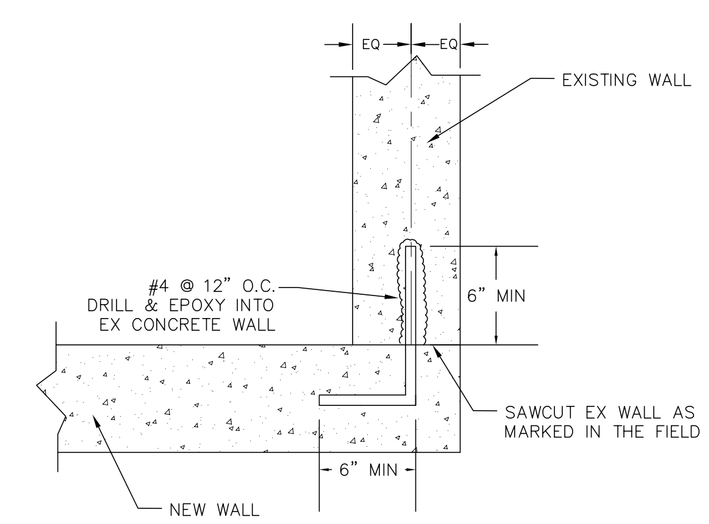

CHURCH RD 15+60 LT MONOLITHIC RETAINING WALL TO EXISTING WALL
NTS DETAIL B

LUIS PONCE
STATE OF WASHINGTON
38378
REGISTERED PROFESSIONAL ENGINEER
1/5/17

00616.063 4/17/17 KJ

SUBMITTED WITH DESIGN PLAN	DESIGNED BY LP/GKG DRAWN BY LMC CHECKED BY LP	R&E REICHHARDT & EBE ENGINEERING, INC. CONSULTING ENGINEERS PO Box 978 423 Front St., Ste 201 Lynden, Washington 98264 Ph (360) 354-3687 Fax (360) 354-0407	NO. / DATE / REVISION / BY	CITY OF FERNDALE 2095 MAIN STREET FERNDALE, WA 98248	CHURCH ROAD STREET IMPROVEMENTS DETAIL SHEET	JOB# / DWG 07037 DET SCALE H: n/a V: n/a DATE 7-8-14 SHEET 63 of 64

P:\Projects\07037\dwg\CD AS BUILT-CONSTRUCTION\Plan Sheets\AB 07037_DET-CONST.dwg, 4/14/2017 1:24:14 PM

CHURCH ROAD TYPICAL SECTIONS

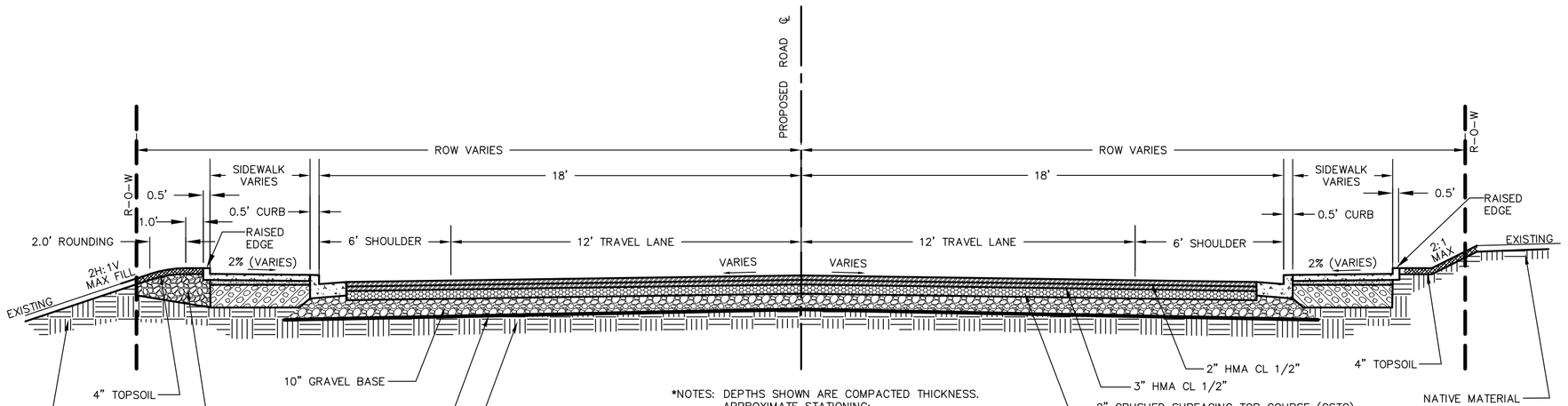

WITH RAISED EDGE

NTS

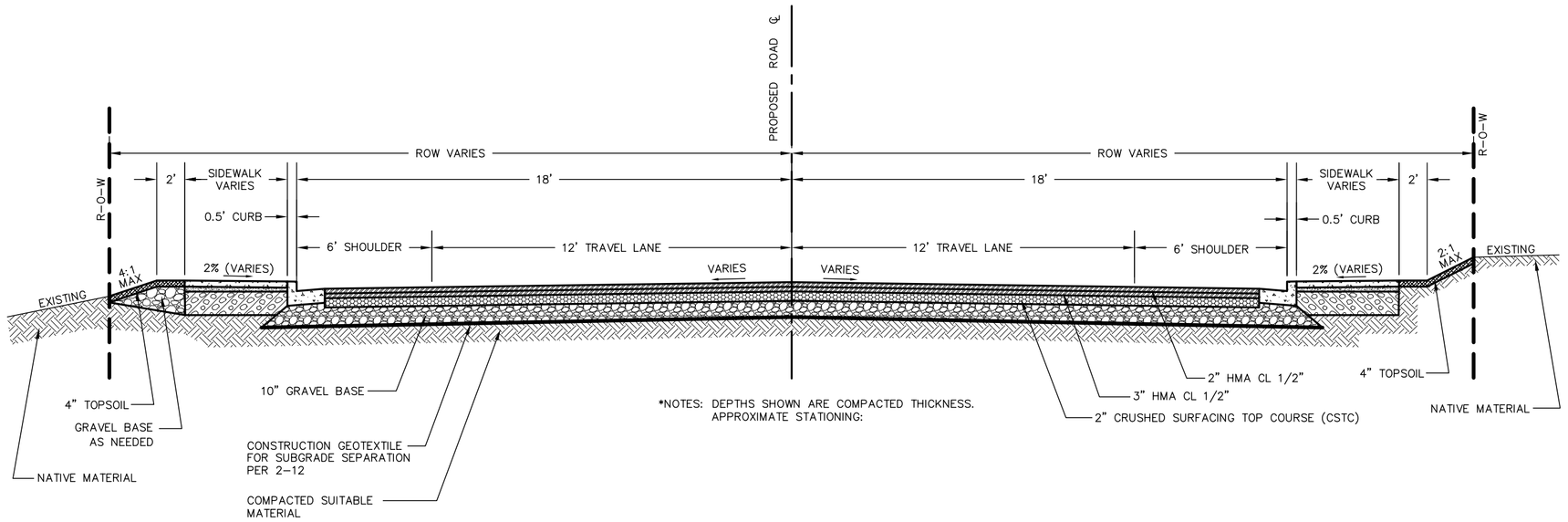

TYPICAL FULL WIDTH RECONSTRUCTION

NTS

SIDE STREET TYPICAL SECTIONS

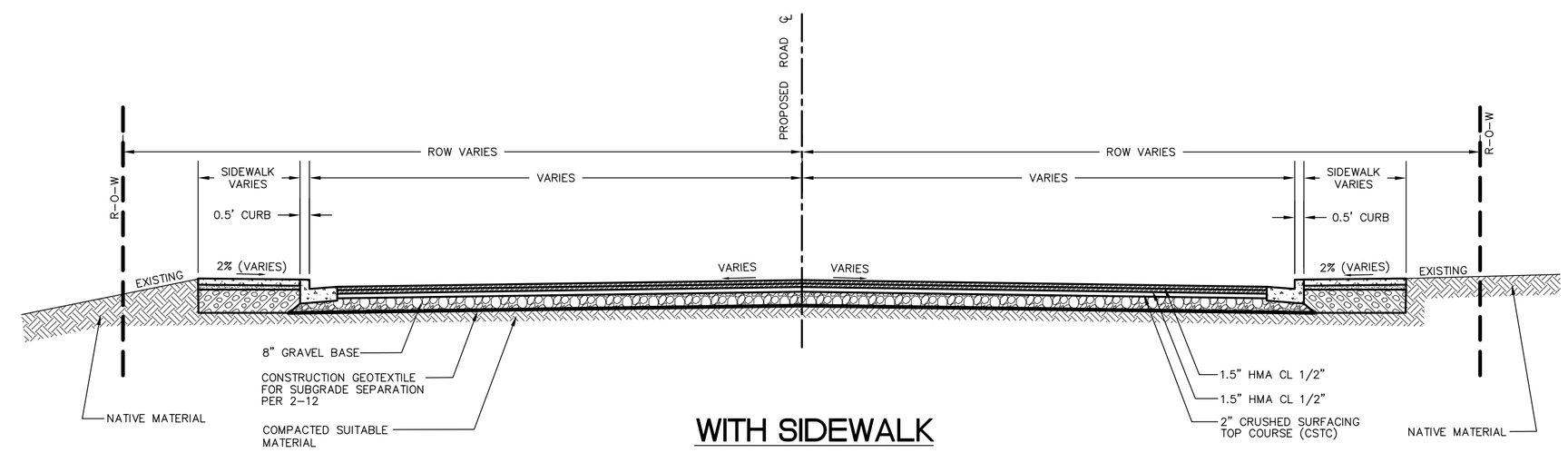

WITH SIDEWALK

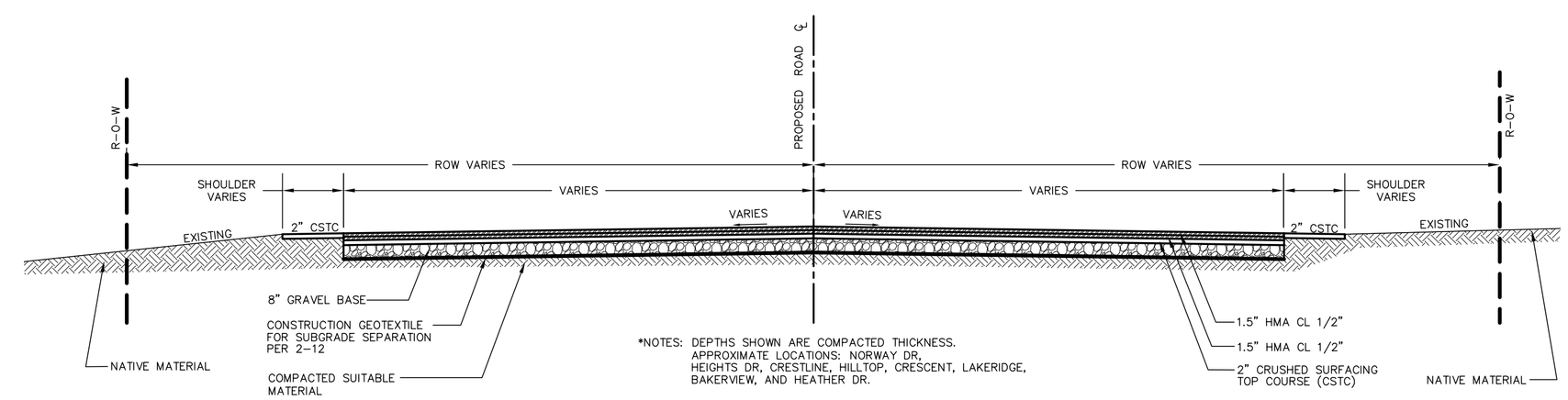

WITH NO SIDEWALK

NTS

00616.064 4/17/17 KJ

LUIS PONCE
STATE OF WASHINGTON
38378
REGISTERED PROFESSIONAL ENGINEER
5/5/17

SUBMITTED WITH DESIGN PLAN	DESIGNED BY LP/GKG DRAWN BY LMC CHECKED BY LP	R&E REICHHARDT & EBE ENGINEERING, INC. CONSULTING ENGINEERS PO Box 978 423 Front St., Ste 201 Lynden, Washington 98264 Ph (360) 354-3687 Fax (360) 354-0407	NO. / DATE / REVISION / BY	CITY OF FERNDALE 2095 MAIN STREET FERNDALE, WA 98248	CHURCH ROAD STREET IMPROVEMENTS DETAIL SHEET	JOB# / DWG 07037 DET SCALE H: n/a V: n/a	DATE 3-5-14 SHEET 64 of 64

P:\Projects\07037\dwg\CD AS BUILT-CONSTRUCTION\Plan Sheets\AB 07037_DET-CONST.dwg 4/14/2017 12:54 PM