ASSOCIATED
PROJECT CONSULTANTS, INC.

NOOKSACK RIVER WATERLINE CROSSING

CITY OF FERNDALE

CITY MANAGER: RON PETERSON

PUBLIC WORKS DIRECTOR: JOHN ELEY

CONSULTING ENGINEER: DOUGLAS N. CAMPBELL, P.E.

DOUGLAS N. CAMPBELL
STATE OF WASHINGTON
REGISTERED
Professional Engineer

6-27-88

RECORD DRAWING

00263.001 2-2-00 KB

117782

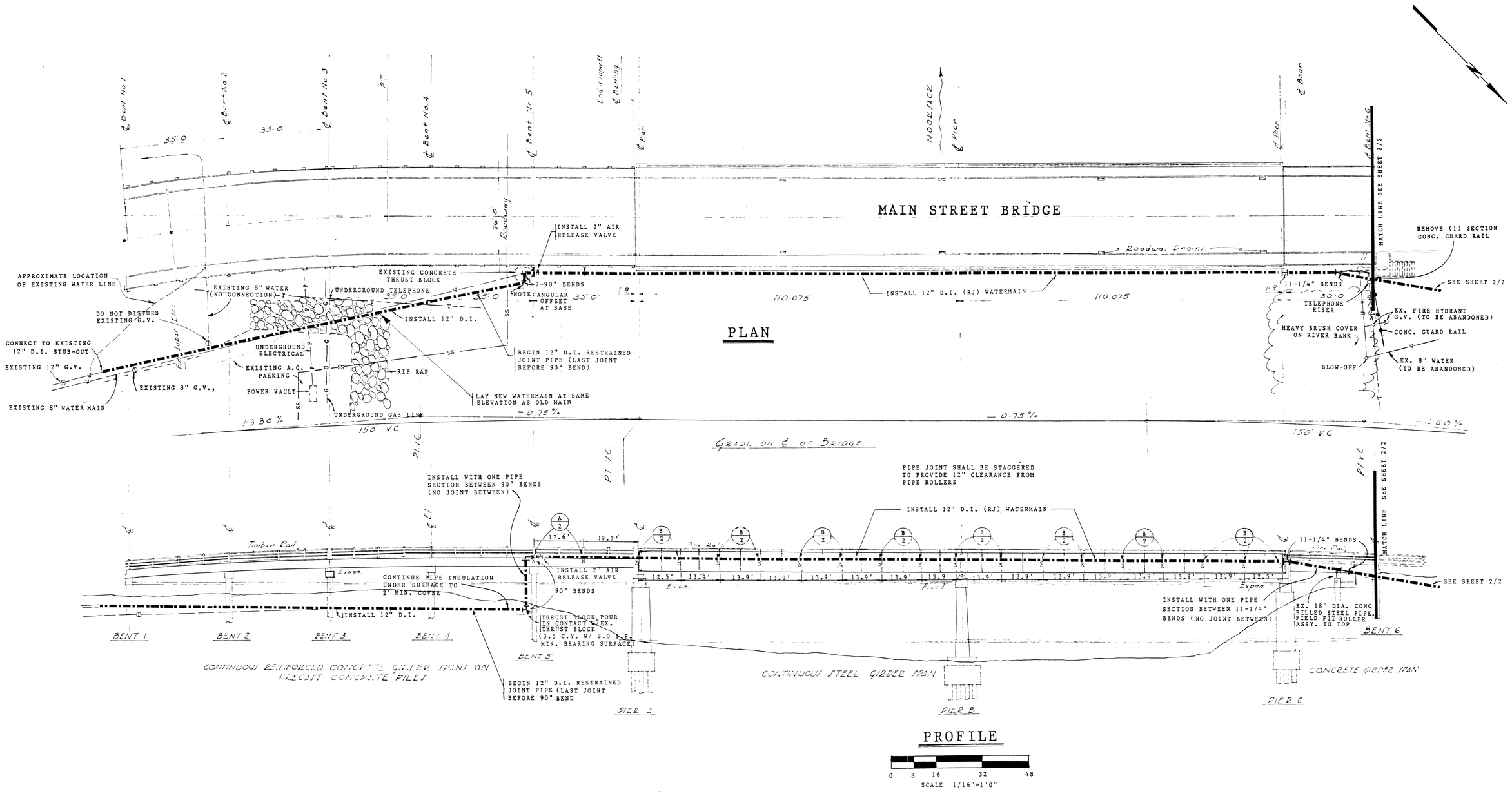

RECORD DRAWING

REVISIONS	Drwn. by	Date	Chkd. by	Date
1				
2				
3				
4				
5				

APPROVED FOR CONSTRUCTION: Title:

APPROVED FOR DESIGN: Title:

Seal: DOUGLAS N. CAMPBELL, STATE OF WASHINGTON, REGISTERED PROFESSIONAL ENGINEER — 6-21-88

Seal

REFERENCES	
Field Bk.	Page
R.O.S.	
A.F.	

ASSOCIATED PROJECT CONSULTANTS, INC.
1401 ASTOR STREET, BELLINGHAM, WA 98225 — 671-1146
366 MARTIN STREET, BOX 1697, BLAINE, WA 98230 — 332-5825

Drawn by: CL/MB Date: JUNE, 1988
Checked by: DNC Date: JUNE, 1988
H. Scale: 1"=16'
V. Scale: 1"=16'
Datum:

Client: CITY OF FERNDALE
Project: NOOKSACK RIVER WATERLINE CROSSING
Title: BRIDGE LAYOUT

JOB NO. 88-127
DRAWING NO. 1 OF 2

00263.002 2.2.06 KR

117762

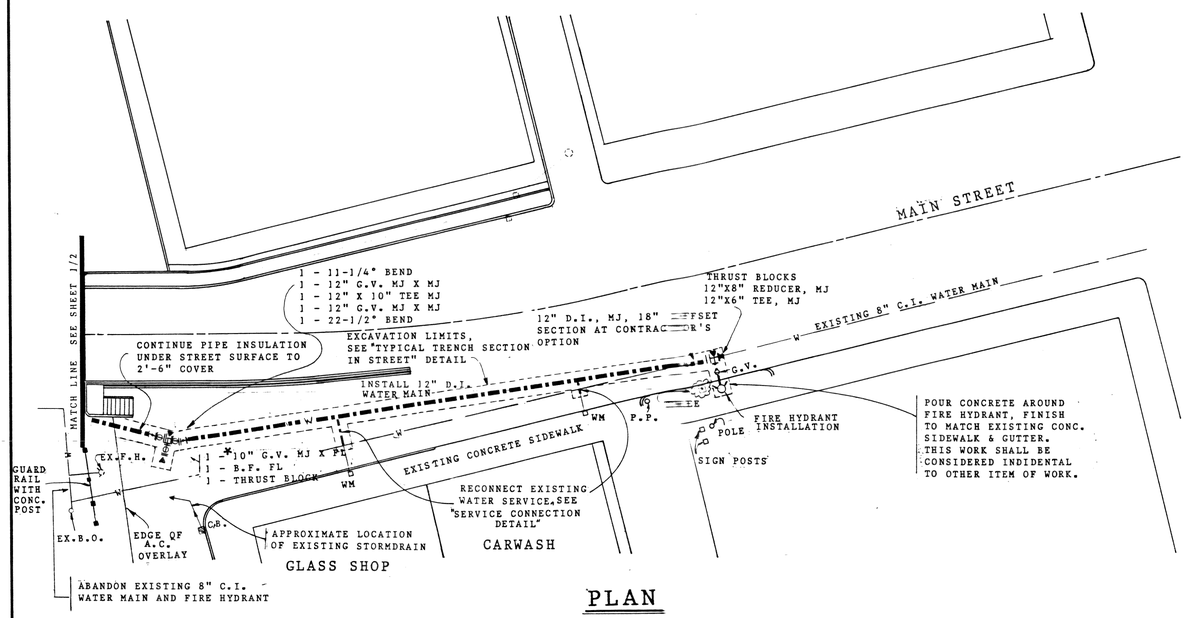

PLAN

0 10 20 40 60
SCALE 1"=20'

* ALTERNATE I

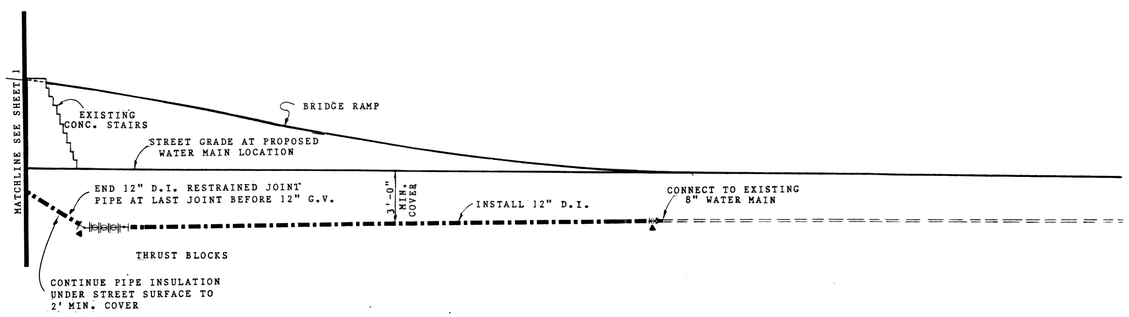

PROFILE

HORIZ. 1"=20'
VERT. 1"=4'

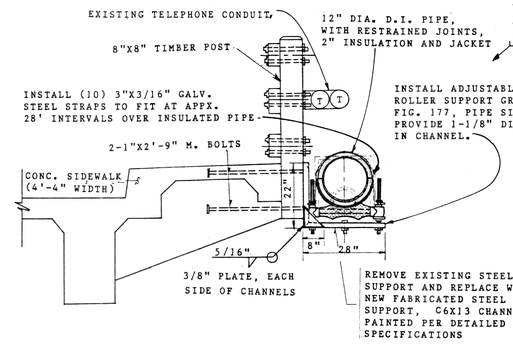

A/2 TYPICAL SECTION AT WOOD RAIL
SCALE: 1/2"=1'0"

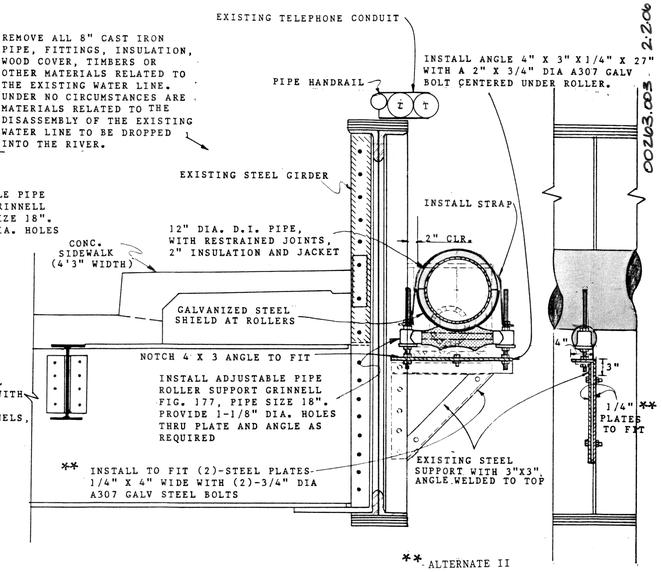

** ALTERNATE II

B/2 TYPICAL SECTION AT STEEL GIRDER
SCALE: 3/4"=1'0"

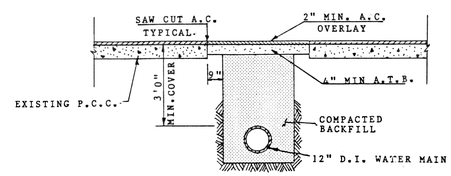

TYPICAL TRENCH IN STREET SECTION

NO SCALE

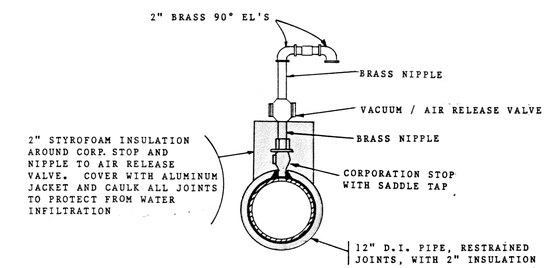

AIR RELEASE VALVE DETAIL

NO SCALE

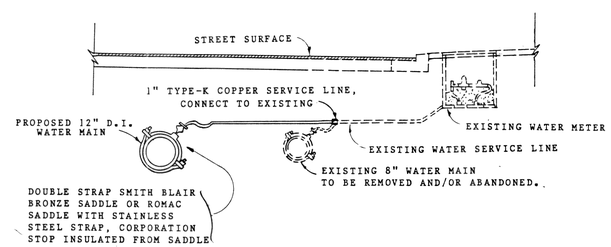

SERVICE CONNECTION DETAIL

NO SCALE

GENERAL NOTES

1. All workmanship and materials shall conform to applicable provisions of the "1988 Standard Specifications for Road, Bridge, and Municipal Construction", DOT/APWA, and shall comply with the Detailed Specifications contained within the Contract Documents.

2. The Contractor is cautioned that underground utilities do exist in the construction area which may interfere with excavation. The Contractor shall make every effort to locate the utilities ahead of the excavation and shall be responsible for their maintenance and protection during his operation.

   Public and private utilities shall be moved by the owning companies. The Contractor shall conform to Section 1-07.17 of the Standard Specifications.

   Any delay or rescheduling of the Contractor's work caused by the relocation of any utilities shall be considered as incidental to construction and no additional compensation shall be allowed therefor.

3. Inspection by the City of Ferndale's consulting Engineer shall be required whenever any work other than maintenance of the Contractor's equipment is being done. Inspection shall be provided at no cost to the Contractor.

RECORD DRAWING

REVISIONS	Drwn. by	Date	Chkd. by	Date
1				
2				
3				
4				
5				

APPROVED FOR CONSTRUCTION: Title:
APPROVED FOR DESIGN: Title:

Seal: DOUGLAS N. CARLSON, REGISTERED PROFESSIONAL ENGINEER, STATE OF WASHINGTON, 22138

Seal

REFERENCES	
Field Bk.	Page
R.O.S.	
A.F.	

ASSOCIATED PROJECT CONSULTANTS, INC.
1401 ASTOR STREET, BELLINGHAM, WA 98225 — 671-1146
366 MARTIN STREET, BOX 1697, BLAINE, WA 98230 — 332-5825

Drawn by: PT, MB
Date: JUNE, 1988
Checked by: DNC
Date: JUNE, 1988
H. Scale: 1" = SEE ABOVE
V. Scale: 1" = SEE ABOVE
Datum:

Client: CITY OF FERNDALE
Project: NOOKSACK RIVER WATERLINE CROSSING
Title: PLAN—PROFILE/DETAILS

JOB NO. 88-127
DRAWING NO. 2 OF 2