TOWN OF FERNDALE, WASHINGTON

WPC-WN-264

RECEIVED
APR 15 1969

SEWAGE SYSTEM IMPROVEMENTS
INTERCEPTOR SEWERS
SCHEDULE II

APPROVED
John F. Anguist
WASHINGTON WATER POLLUTION CONTROL COMMISSION
5/6/69

U.S. DEPARTMENT OF THE INTERIOR
FEDERAL WATER POLLUTION CONTROL ADMINISTRATION
APPROVED MAY 1969
Ray Ellerman
FOR CONSTRUCTION GRANTS PROGRAM

STEVENS, THOMPSON & RUNYAN, INC.

Engineers / Planners

SEATTLE, WASHINGTON

PORTLAND, OREGON

RECEIVED
MAY 16 1969
FWPCA

20 07 100:17200

INDEX TO DRAWINGS

SHEET NO.	TITLE
1	LOCATION MAP AND INDEX
2	PLAN AND PROFILE - 15-INCH INTERCEPTOR
3	PLAN AND PROFILE - 15-INCH INTERCEPTOR
4	PLAN AND PROFILE - 10-INCH INTERCEPTOR - DETAILS SIPHON INLET MANHOLE
5	PLAN AND PROFILE - 8-INCH COLLECTOR
6	PLAN AND PROFILE - 8-INCH COLLECTOR AND PUMP MANHOLE
7	SEWER DETAILS

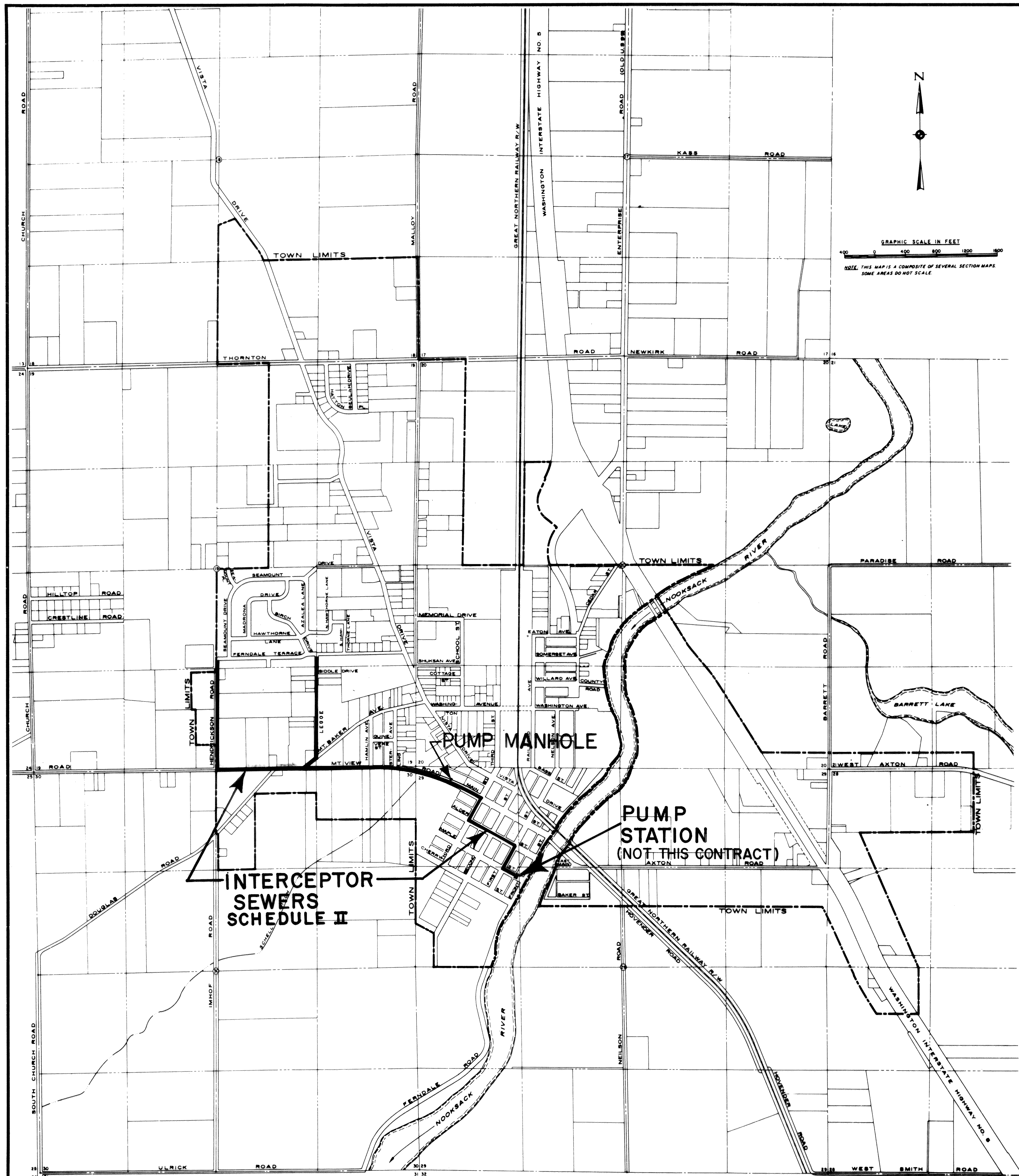

LEGEND

EXISTING		NEW
4"W	WATER LINE W/SIZE & VALVE	
	WATER METER	
	FIRE HYDRANT	
S 8"	SANITARY SEWER W/SIZE & MANHOLE	(heavy line)
	CATCH BASIN	
	CULVERT	
2"G	GAS LINE W/SIZE & VALVE	
	TELEPHONE OR POWER POLE	
	GUY POLE	
	GUYED POLE	
x—x—x	FENCE	
	TREES	
	SIDEWALK	
	EXISTING ROAD SURFACE	

AS BUILT
DATE JAN. 1970

MICROFILMED

DATE	NO.	REVISION	BY

DESIGNED T. S. APPROVED
DRAWN L. J. M. SCALE AS SHOWN DATE JAN. 1969
CHECKED T. S. FILE 67-S-168.002

Stevens, Thompson & Runyan, Inc.
Engineers/Planners
PORTLAND, OREGON SEATTLE, WASHINGTON

TOWN OF FERNDALE, WASHINGTON
INTERCEPTOR SEWERS
SCHEDULE II

LOCATION MAP AND INDEX

1 / 7

Dwg # S-67-168.002-26

00211.006 2-7-00 KR

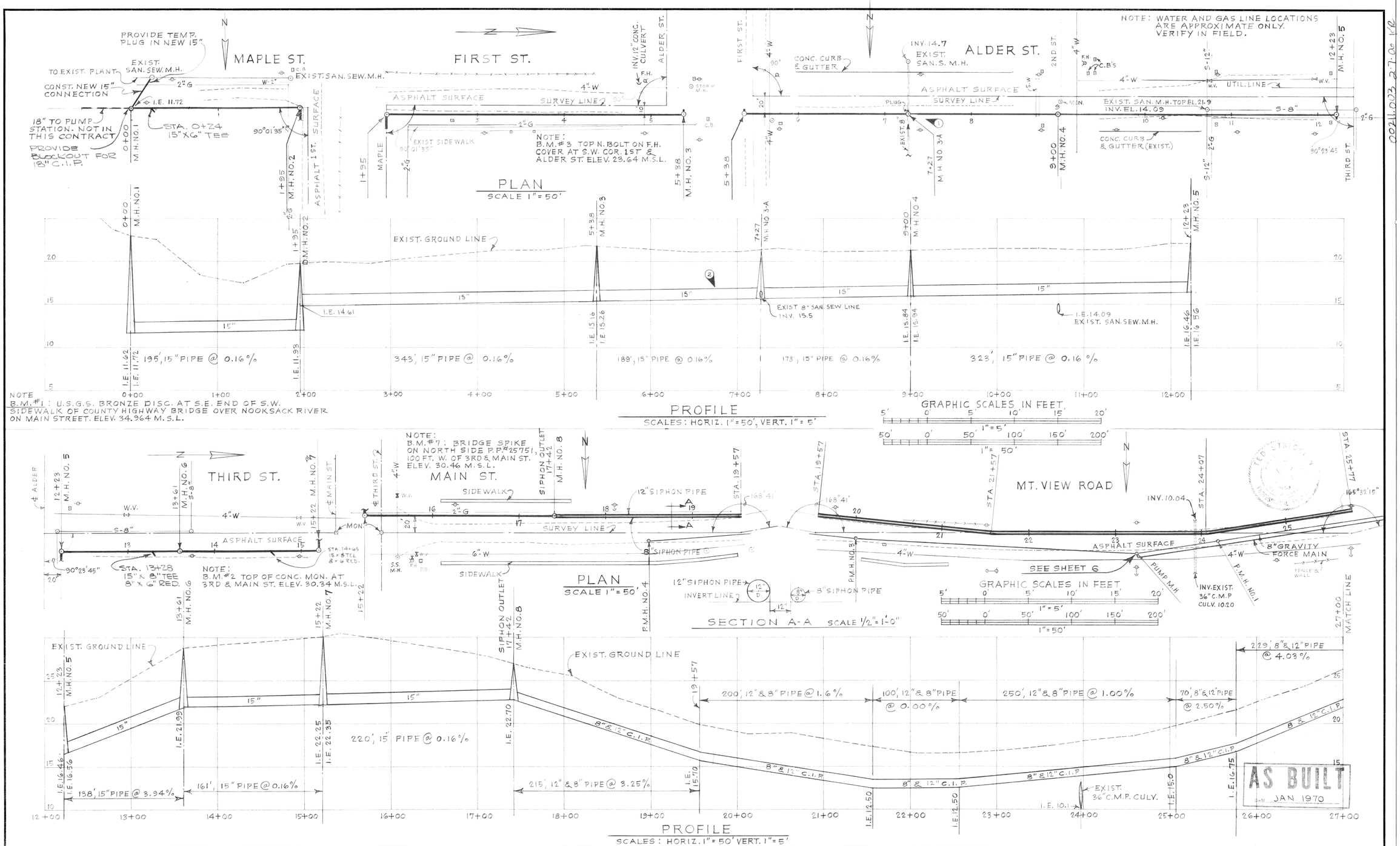

DATE	NO.	REVISION	BY
1/13/70	3	LOCATE TEES	RHP
1/13/70	2	RELOCATE PIPE ELEV. BTWN 1+95 & 9+00	RHP
1/13/70	1	LOCATE M.H. NO 3-A	RHP

DESIGNED T.S. | DRAWN L. J. M. | CHECKED T.S. | APPROVED H. R. Murray | SCALE AS SHOWN | DATE JAN. 1969 | FILE 67-S-168.002

Stevens, Thompson & Runyan, Inc.
Engineers / Planners
PORTLAND, OREGON SEATTLE, WASHINGTON

TOWN OF FERNDALE, WASHINGTON
INTERCEPTOR SEWERS
SCHEDULE II

PLAN AND PROFILE
15 INCH INTERCEPTOR

MICROFILMED

2 / 7

Dwg # S-67-168.002-27

SHANNON & COMPANY

NOTE:
B.M. #4: R.R. SPIKE ON S. SIDE P.P. # 25756 AT S. SIDE MT. VIEW RD. BETWEEN H'SE #491 AND FEED STORE. ELEV. 21.68 M.S.L.

NOTES:
1. ENTIRE BACKFILL SHALL BE COMPACTED IN NOT MORE THAN 8" LIFTS FROM STA. 38+65 TO STA. 43+68
2. USE BANK RUN GRAVEL AS SPECIFIED FOR STREET CROSSINGS.

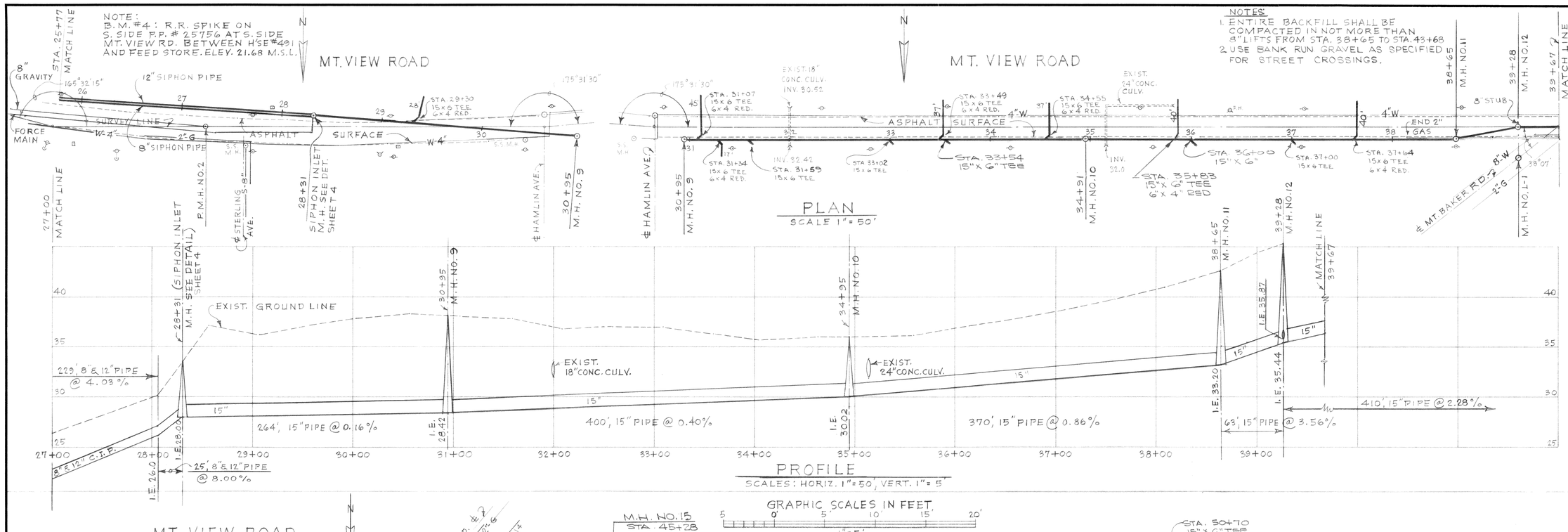

AS BUILT
DATE JAN. 1970

DATE	NO.	REVISION	BY
1/13/70	3	LOCATE TEES & STUBS	RHP
1/13/70	2	RELOCATE PIPE BTWN M.H. NO's. 13 & 17	RHP
1/13/70	1	RELOCATE M.H.'s NO. 13 & NO. 17	RHP

DESIGNED T. S. | APPROVED H. R. Hawley
DRAWN L. J. M. | SCALE AS SHOWN | DATE JAN. 1969
CHECKED T. S. | FILE 67-S-168-002

Stevens, Thompson & Runyan, Inc.
Engineers / Planners
PORTLAND, OREGON SEATTLE, WASHINGTON

TOWN OF FERNDALE, WASHINGTON
INTERCEPTOR SEWERS
SCHEDULE II

PLAN AND PROFILE
15 INCH INTERCEPTOR

MICROFILMED

3 / 7

Dwg # S-67-168.002-28

SHANNON & COMPANY

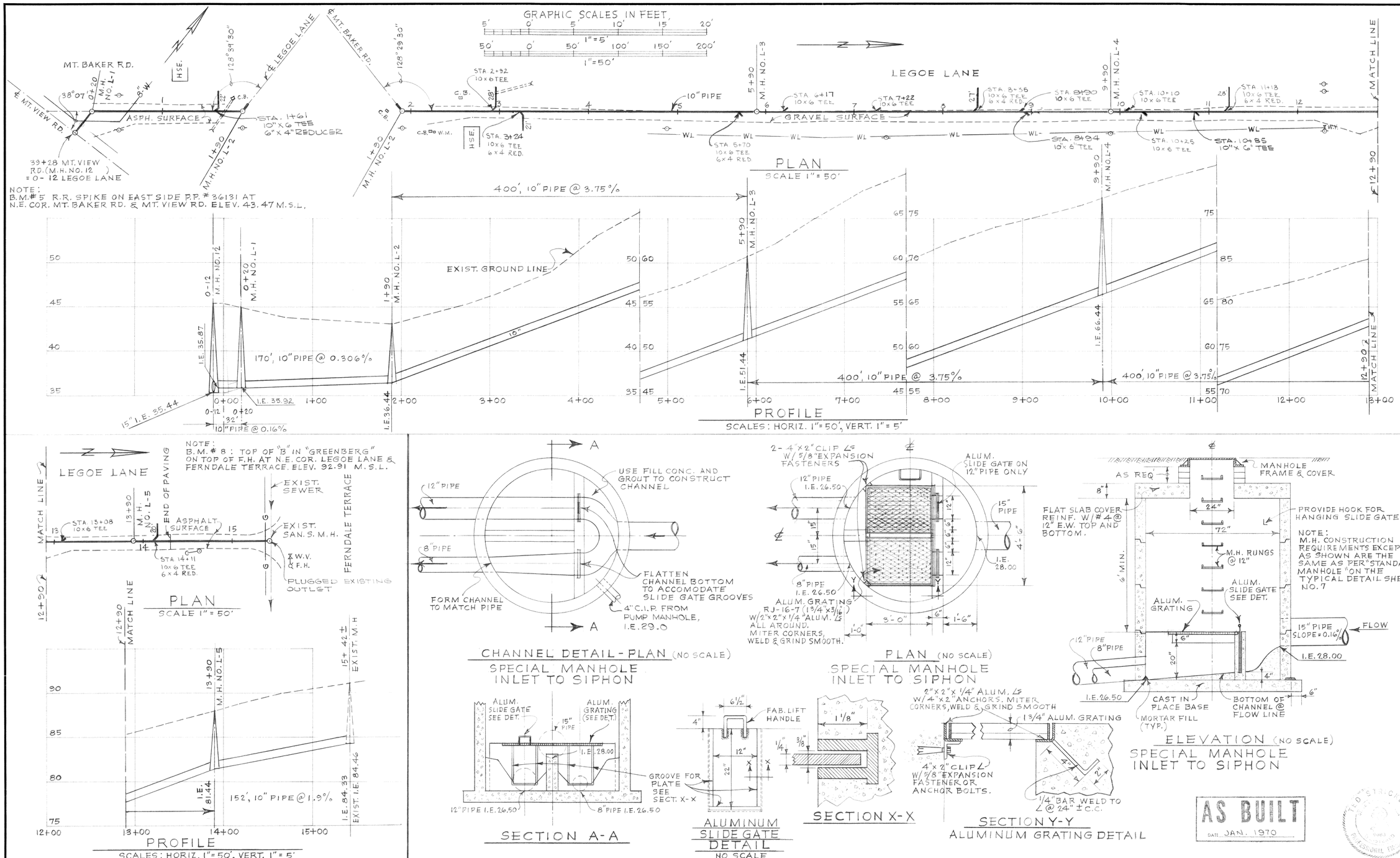

DATE	NO.	REVISION	BY
1/13/70	1	LOCATE TEES	RHP

DESIGNED T. S. | APPROVED H. R. Murray
DRAWN L. J. M. | SCALE AS SHOWN | DATE JAN. 1969
CHECKED T. S. | FILE 67-S-168.002

Stevens, Thompson & Runyan, Inc.
Engineers/Planners
PORTLAND, OREGON SEATTLE, WASHINGTON

TOWN OF FERNDALE, WASHINGTON
INTERCEPTOR SEWERS
SCHEDULE II

PLAN AND PROFILE
10 INCH INTERCEPTOR
DETAILS-SIPHON INLET MANHOLE

4 / 7

Dwg # 67-S-168.002-29

SHANNON & COMPANY

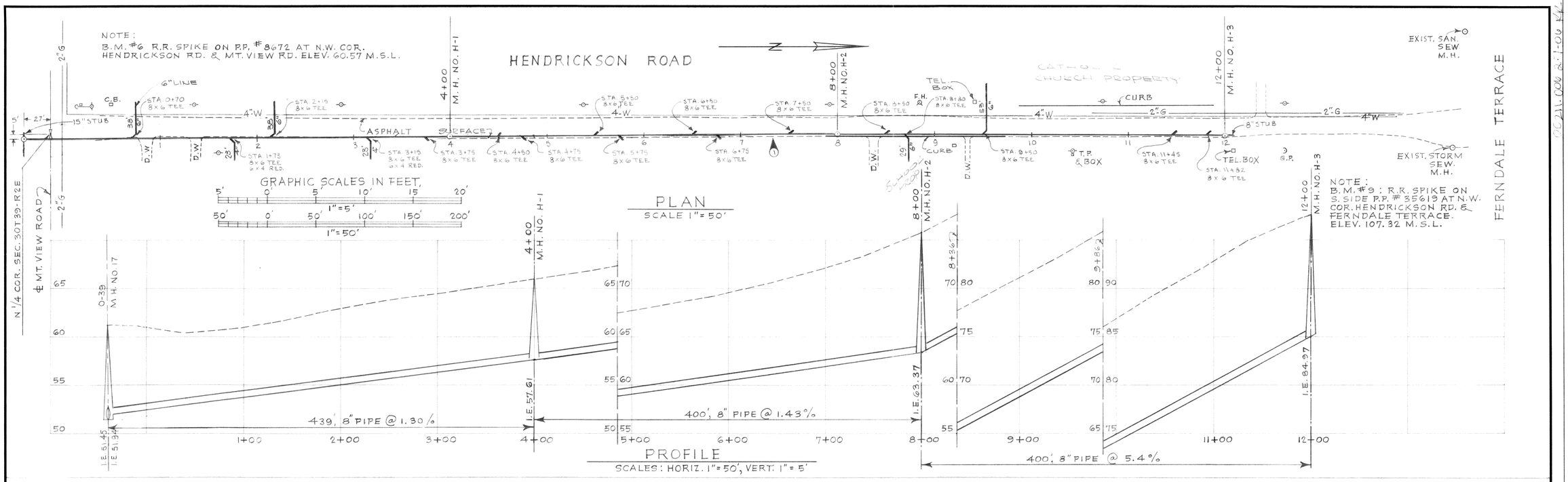

AS BUILT
DATE JAN. 1970

MICROFILMED

DATE	NO.	REVISION	BY
1/13/70	2	LOCATE TEES & STUBS	RHP
1/13/70	1	RELOCATE PIPELINE	RHP

DESIGNED T.S. | APPROVED H.R. Melling
DRAWN L.J.M. | SCALE AS SHOWN | DATE JAN. 1969
CHECKED T.S. | FILE 67-S-168.002

Stevens, Thompson & Runyan, Inc.
Engineers/Planners
PORTLAND, OREGON SEATTLE, WASHINGTON

TOWN OF FERNDALE, WASHINGTON
INTERCEPTOR SEWERS
SCHEDULE II

PLAN AND PROFILE
8 INCH COLLECTOR

5/7

Dwg # 67-S-168.002-30

SHANNON & COMPANY

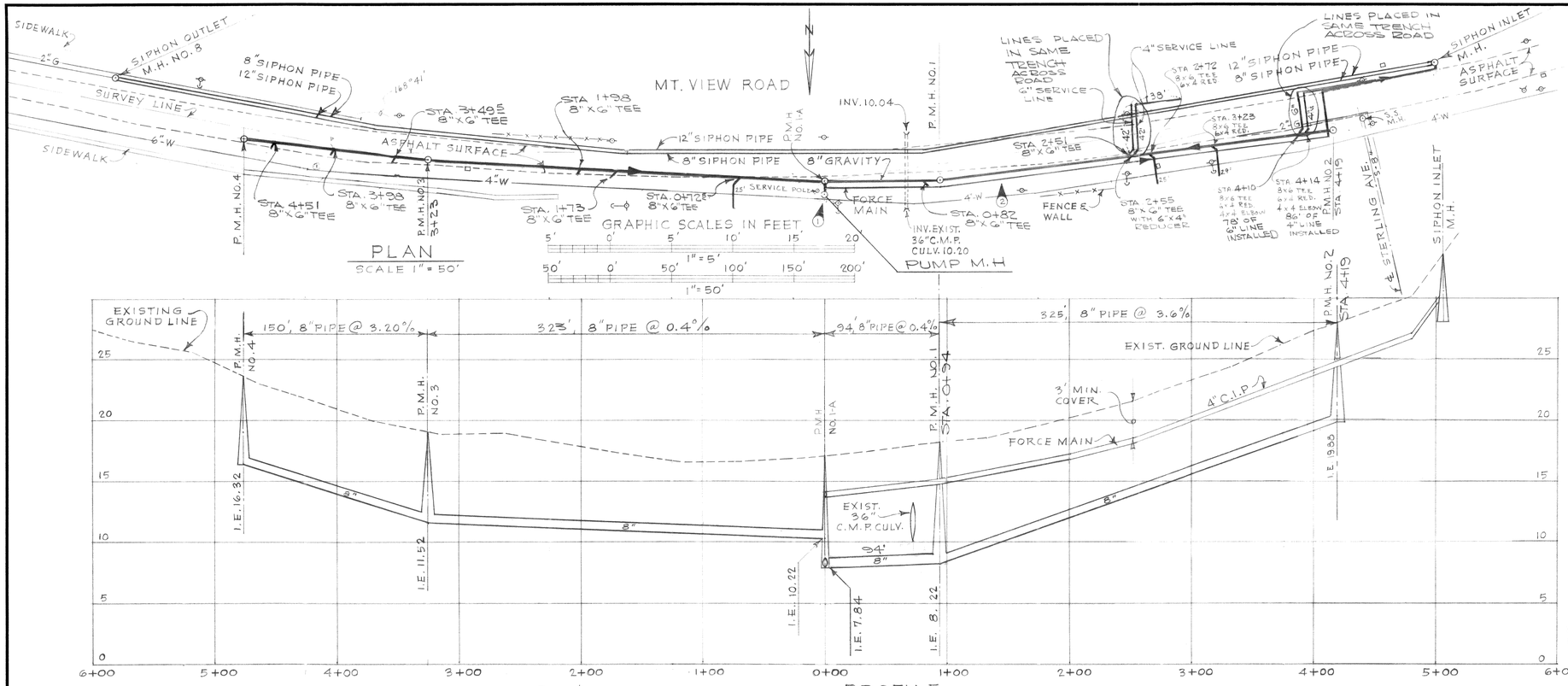

PLAN
SCALE 1" = 50'

PROFILE
SCALES: HORIZ. 1" = 50', VERT. 1" = 5'

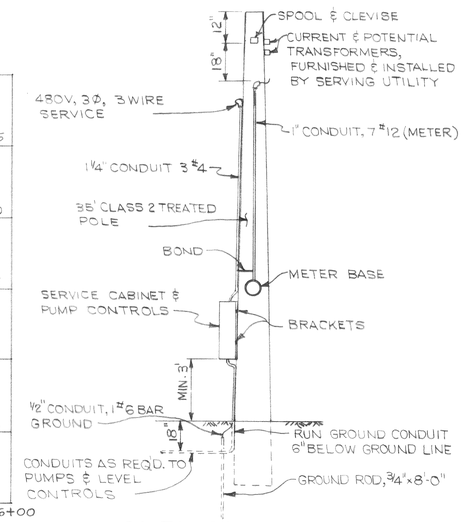

SERVICE POLE
480 VOLT, 3 PHASE
(SUBJECT TO REQUIREMENT OF SERVING UTILITY)
NO SCALE

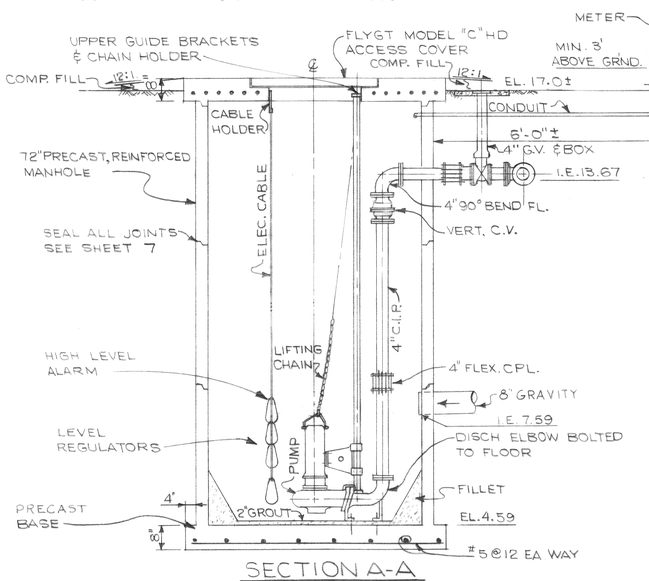

SECTION A-A
SCALE: ½" = 1'-0"

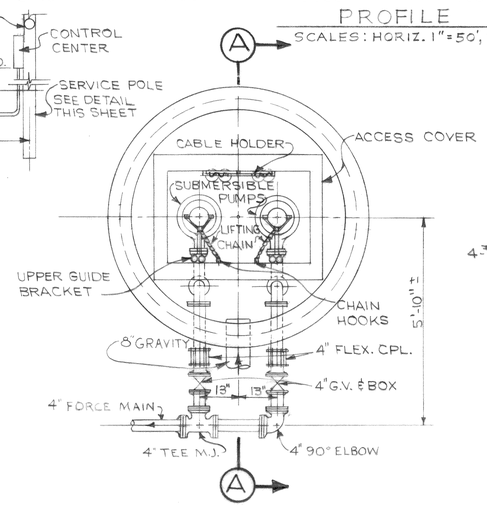

PLAN
SCALE: ½" = 1'-0"

PUMP MANHOLE

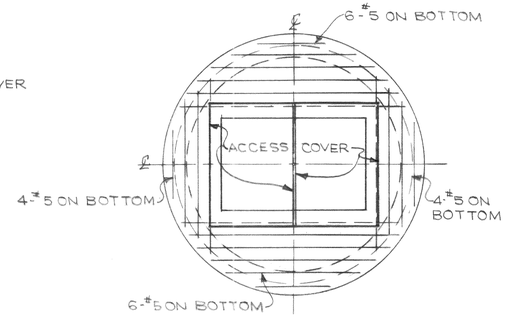

ROOF PLAN
SCALE ½" = 1'-0"

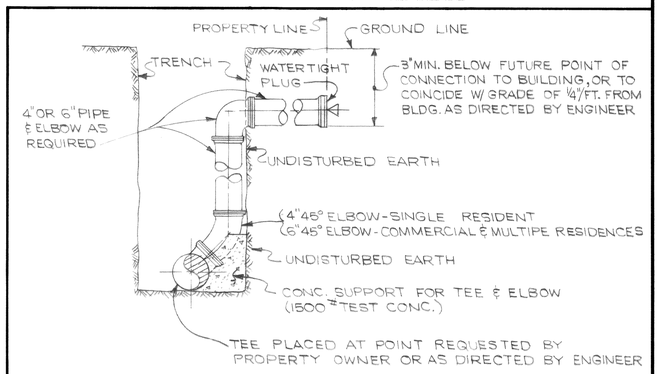

TYPICAL SERVICE CONNECTION
NO SCALE

AS BUILT
DATE JAN. 1970

MICROFILMED

DATE	NO.	REVISION	BY
1/13/70	3	LOCATE TEES	RHP
1/13/70	2	RELOCATE 8" GRAVITY & 4" FORCE MAIN	RHP
1/13/70	1	RELOCATE & RECONSTRUCT PUMP M.H.	RHP

DESIGNED T.S. | APPROVED W. R. Mahoney
DRAWN L.J.M. | SCALE AS SHOWN | DATE JAN. 1969
CHECKED T.S. | FILE 67-S-168.002

Stevens, Thompson & Runyan, Inc.
Engineers / Planners
PORTLAND, OREGON SEATTLE, WASHINGTON

TOWN OF FERNDALE, WASHINGTON
INTERCEPTOR SEWERS
SCHEDULE II

PLAN AND PROFILE
8" COLLECTOR AND PUMP MANHOLE

6/7

Dwg # 67-S-168.002-31

SHANNON & COMPANY

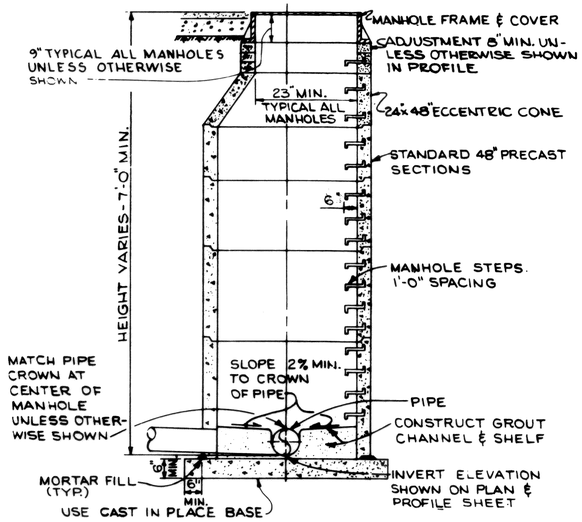

STANDARD MANHOLE

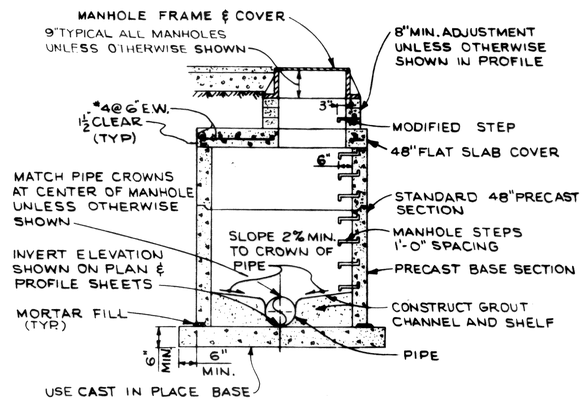

SHALLOW MANHOLE

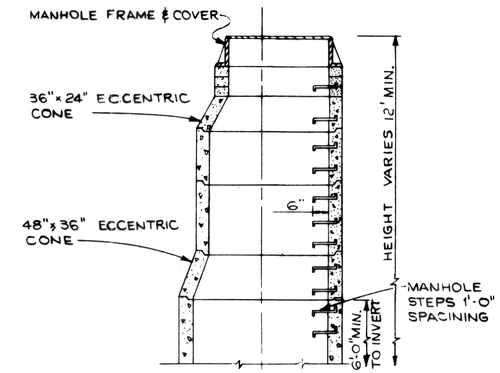

TAPERED MANHOLE

NOTE: 1) ALTERNATE FOR MANHOLES OVER 12' IN HEIGHT.
2) SEE STANDARD MANHOLE (THIS SHEET) FOR CONSTRUCTION DETAILS.

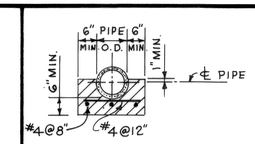

SECTION B-B

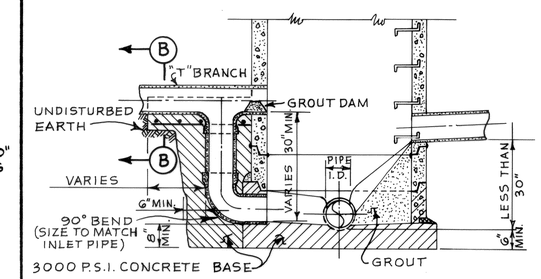

OUTSIDE DROP INSIDE DROP

NOTE: SEE STANDARD MANHOLE (THIS SHEET) FOR CONSTRUCTION DETAILS.

DROP MANHOLE

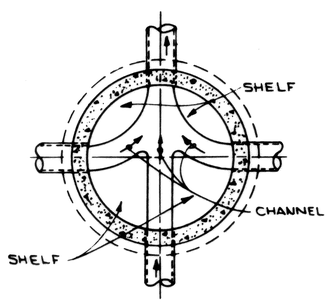

CHANNEL DETAIL

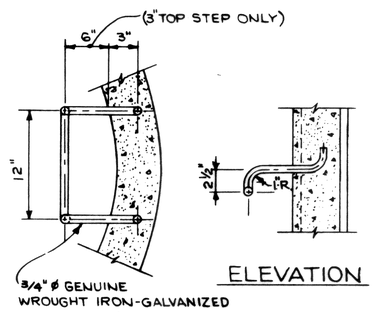

ELEVATION

PLAN

MANHOLE STEP

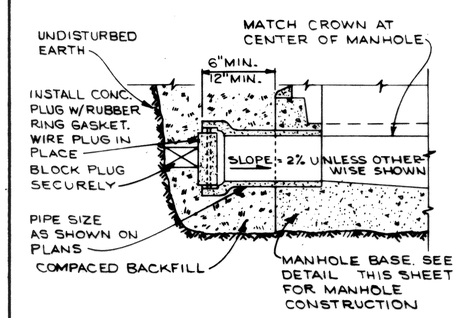

TYPICAL STUB DETAIL

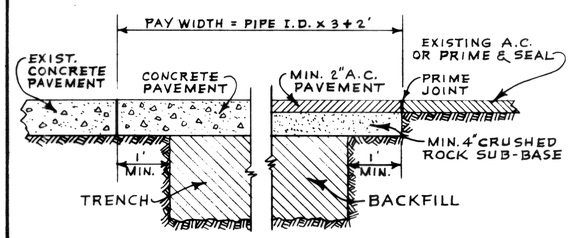

PAVEMENT REPLACEMENT DETAILS

PAVEMENT REPLACEMENT NOTES

1. CONCRETE SURFACE TO BE REPLACED WITH 3000 P.S.I. CONCRETE TO SAME THICKNESS AS EXISTING PAVEMENT.
2. ASPHALT PRIME & SEAL AND ASPHALTIC CONCRETE SURFACES TO BE REPLACED WITH NOT LESS THAN 2" OF ASPHALTIC CONCRETE.
3. CONCRETE PAVEMENTS OVERLAID WITH ASPHALT SHALL BE REPLACED WITH ASPHALTIC CONCRETE FOR TOTAL DEPTH OF BOTH PAVEMENTS REMOVED.
4. GRAVEL SURFACES TO BE REPLACED, INCLUDING SHOULDERS, SHALL BE REPLACED WITH MIN. OF 2" OF GRAVEL.
5. CONCRETE & ASPHATIC CONCRETE PAVEMENTS TO BE REMOVED SHALL BE SAWED AND TRIMMED TO STRAIGHT UNIFORM LINES.

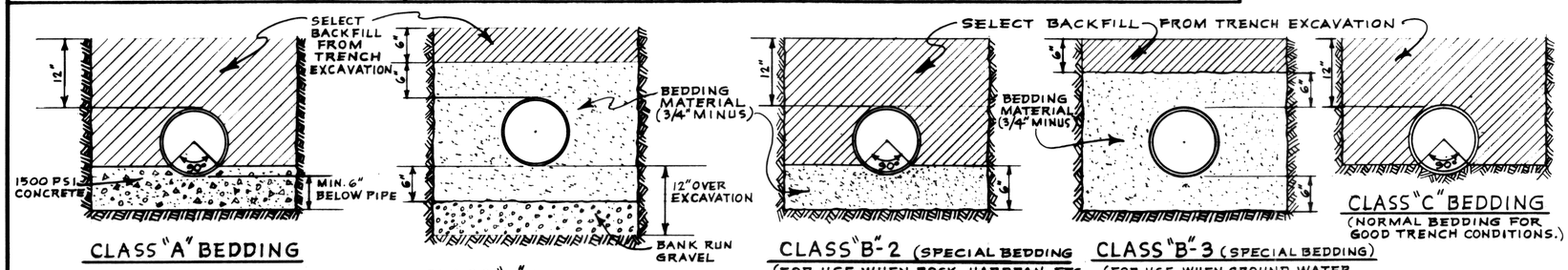

CLASS "A" BEDDING

CLASS "B"-1 (SPECIAL BEDDING)
(FOR USE WHEN QUICKSAND OR OTHER UNSTABLE CONDITION IS ENCOUNTERED.)

CLASS "B"-2 (SPECIAL BEDDING
(FOR USE WHEN ROCK, HARDPAN, ETC. IS ENCOUNTERED.)

CLASS "B"-3 (SPECIAL BEDDING)
(FOR USE WHEN GROUND WATER IS ENCOUNTERED.)

CLASS "C" BEDDING
(NORMAL BEDDING FOR GOOD TRENCH CONDITIONS.)

PIPE BEDDING DETAILS

NO SCALE

PIPE BEDDING NOTES

1. MAXIMUM TRENCH WIDTH AT TOP OF PIPE SHALL NOT EXCEED THREE TIMES THE PIPE I.D.
2. TRENCH BEDDING AND BACKFILL SHALL BE THOROUGHLY COMPACTED TO A PLANE ONE FOOT ABOVE THE TOP OF THE PIPE. SEE SPECS. FOR REMAINDER OF BACKFILL.
3. PAY WIDTH FOR BEDDING MATERIAL SHALL BE THREE TIMES THE PIPE I.D.

AS BUILT
DATE JAN. 1970

DATE	NO.	REVISION	BY

DESIGNED T.S. | APPROVED | DRAWN L.J.M. | SCALE NONE | DATE JAN. 1969 | CHECKED T.S. | FILE 67-S-168.002

Stevens, Thompson & Runyan, Inc.
Engineers / Planners
PORTLAND, OREGON SEATTLE, WASHINGTON

TOWN OF FERNDALE, WASHINGTON
INTERCEPTOR SEWERS
SCHEDULE II

SEWER DETAILS

7/7

MICROFILMED

Dwg # S-67-168.002-32