HOMESTEAD

PLANNED RESIDENTIAL DEVELOPMENT

CORRELL PARK
PLANNED UNIT DEVELOPMENT
FERNDALE, WASHINGTON

CONTRACT DRAWINGS FOR:
HOMESTEAD NORTHWEST, INC.
LYNDEN, WASHINGTON

CONSULTING ENGINEER:
DAVID EVANS AND ASSOCIATES, INC.

VICINITY MAP
N.T.S.

DRAWING INDEX

LEGEND

EXISTING	PROPOSED	DESCRIPTION
P		POWER
T		TELEPHONE
G		GAS
D		STORM DRAINAGE
S		SEWER
W		WATER
		INDEX CONTOURS
		NORMAL CONTOURS
		EDGE OF PAVEMENT
		DITCH
		PROPERTY LINE
		EASEMENT LINE
		SURVEY SECTION LINE
		CENTER LINE
		BUILDING FOOTPRINT
		CULVERT
		FIRE HYDRANT
		STORM DRAIN CATCH BASIN
		SANITARY SEWER MANHOLE
		GATE VALVE
		POWER POLE
P		POWER VAULT
T		TELEPHONE VAULT
		SIGN
		STREET LIGHT

NOTES

GENERAL NOTES

1. ALL WORK AND MATERIALS SHALL BE IN ACCORDANCE WITH THE 1996 WASHINGTON STATE DEPARTMENT OF TRANSPORTATION STANDARD SPECIFICATIONS (STANDARD SPECIFICATIONS) AND STANDARD PLANS (STANDARD PLANS) FOR ROAD, BRIDGE, AND MUNICIPAL CONSTRUCTION AND THE CITY OF FERNDALE DEVELOPMENT STANDARDS (C.O.F. STANDARDS), LATEST EDITION. ALL WORK AND MATERIAL SHALL BE SUBJECT TO APPROVAL BY THE CITY OF FERNDALE.

2. UNDERGROUND UTILITIES ARE KNOWN TO EXIST IN THE AREA OF CONSTRUCTION. THE LOCATION OF EXISTING UTILITIES SHOWN ON THE PROJECT DRAWINGS ARE APPROXIMATE. THE CONTRACTOR IS RESPONSIBLE FOR CONTACTING ALL UTILITY OWNERS FOR LOCATIONS AND TO FIELD VERIFY ALL UTILITY LOCATIONS PRIOR TO CONSTRUCTION. THE ONE-CALL NUMBER FOR UNDERGROUND UTILITY LOCATES IS 1-800-424-5555. THE CONTRACTOR SHALL BE RESPONSIBLE FOR MAINTAINING THE INTEGRITY OF ALL EXISTING UTILITIES AND FOR NOTIFYING THE ENGINEER PROMPTLY OF ANY CONFLICTS WITH EXISTING UTILITIES.

3. PUBLIC RIGHTS-OF-WAY SHALL BE KEPT IN A CLEAN AND SERVICEABLE CONDITION AT ALL TIMES. IN THE EVENT THAT MATERIALS ARE INADVERTENTLY DEPOSITED IN PUBLIC RIGHTS-OF-WAY, THE MATERIAL SHALL BE PROMPTLY REMOVED. MATERIALS ARE TO BE SWEPT AND REMOVED PRIOR TO ANY STREET WASHING. PUBLIC AND PRIVATE DRAINAGE WAYS SHALL BE PROTECTED FROM POLLUTION AND SEDIMENTATION. FAILURE TO MEET THESE REQUIREMENTS MAY RESULT IN VIOLATION OF STATE OR FEDERAL WATER QUALITY STANDARDS.

4. THE CONTRACTOR SHALL BE RESPONSIBLE FOR KEEPING AS-BUILT INFORMATION. AS-BUILT DRAWINGS SHALL INCLUDE THE EXACT LOCATION OF ALL UNDERGROUND AND ABOVE-GROUND UTILITIES. UPON COMPLETION OF THE PROJECT, THESE AS-BUILT DRAWINGS SHALL BE GIVEN TO THE PROJECT ENGINEER FOR INCORPORATION INTO THE PROJECT'S RECORD DRAWINGS.

5. THE CONTRACTOR SHALL BE RESPONSIBLE FOR MAINTAINING EROSION CONTROL MEASURES (SILT FENCE, STRAW BALE DAMS, SILT PONDS, ETC.), THROUGHOUT THE DURATION OF THE PROJECT. EROSION CONTROL MEASURES SHALL BE INSTALLED PRIOR TO ANY CLEARING OR GRADING.

6. ALL HARD SURFACE PAVEMENTS MUST BE REPAIRED AT THE CLOSE OF EACH WORK DAY. THE REPAIRS CAN BE TEMPORARY WITH ASPHALT COLD MIX OR PERMANENT WITH HOT MIX ASPHALT OR CONCRETE.

WATER MAIN SPECIFICATIONS

7. ALL WORK AND MATERIALS SHALL BE IN ACCORDANCE WITH THE STANDARD SPECIFICATIONS, SECTIONS 7-08 TO 7-15 AND THE C.O.F. STANDARDS, SECTION 705, AND SHALL BE SUBJECT TO APPROVAL BY THE CITY OF FERNDALE.

8. ALL WORK MUST BE INSPECTED AND APPROVED BY A REPRESENTATIVE OF THE CITY OF FERNDALE DEPARTMENT OF PUBLIC WORKS. 24-HOURS NOTICE MUST BE GIVEN PRIOR TO STARTING WORK OR TO SCHEDULE INSPECTIONS.

9. ALL WATER MAIN PIPE SHALL BE DUCTILE IRON, THICKNESS CLASS 50, WITH CEMENT LINING IN ACCORDANCE WITH A.W.W.A. STANDARD H3-71, C151-71, AND CEMENT LINING C104-71.

10. PIPE LAYING SHALL BE IN ACCORDANCE WITH THE STANDARD SPECIFICATIONS, SECTION 7-11. ALL PIPE SHALL HAVE A MINIMUM COVER OF 3.5 FEET.

11. ALL VALVES SHALL BE RESILIENT SEAT GATE VALVES IN ACCORDANCE WITH C.O.F. STANDARDS, SECTION 705.B.3.

12. ALL FIRE HYDRANTS SHALL BE IN ACCORDANCE WITH C.O.F. STANDARDS, DRAWING NO. W-1.

13. ALL BLOW OFFS SHALL BE IN ACCORDANCE WITH C.O.F. STANDARDS, DRAWING NO. W-10 FOR NON-EXTENDABLE MAIN.

14. HYDROSTATIC TESTING AND DISINFECTION OF WATER MAINS SHALL BE IN ACCORDANCE WITH THE STANDARD SPECIFICATIONS, SECTIONS 7-11.3(11) AND 7-11.3(12).

SEWER SPECIFICATIONS

15. ALL WORK AND MATERIALS SHALL BE IN ACCORDANCE WITH THE STANDARD SPECIFICATIONS, SECTIONS 7-08 AND 7-19 AND THE C.O.F. STANDARDS, SECTION 706, AND SHALL BE SUBJECT TO APPROVAL BY THE CITY OF FERNDALE.

16. ALL WORK MUST BE INSPECTED AND APPROVED BY A REPRESENTATIVE OF THE CITY OF FERNDALE DEPARTMENT OF PUBLIC WORKS. 24-HOURS NOTICE MUST BE GIVEN PRIOR TO STARTING WORK OR TO SCHEDULE INSPECTIONS.

17. TRENCH EXCAVATION AND BEDDING SHALL BE IN ACCORDANCE WITH THE STANDARD SPECIFICATIONS, SECTION 7-08.3(1)A AND WITH C.O.F. STANDARDS, DRAWING NO. SS-1 AND SS-15.

18. SANITARY PIPE MATERIAL SHALL BE IN ACCORDANCE WITH THE STANDARD SPECIFICATIONS, SECTION 7-17.

19. PIPE LAYING SHALL MEET THE REQUIREMENTS OF THE STANDARD SPECIFICATIONS, SECTION 7-08.3(2)B.

20. ALL SIDE SEWERS SHALL BE CONSTRUCTED IN ACCORDANCE WITH C.O.F. STANDARDS, DRAWING NO. SS-6, SS-8, AND SS-13.

21. ALL MANHOLES SHALL BE IN ACCORDANCE WITH C.O.F. STANDARDS, DRAWING NO. SS-2 AND SHALL HAVE FIELD CONSTRUCTED CHANNEL AND SHELF.

22. ALL CLEANOUTS SHALL BE IN ACCORDANCE WITH C.O.F. STANDARDS, DRAWING NO. SS-5.

23. ALL SEWER PIPE SHALL BE CLEANED AND AIR PRESSURE TESTED IN ACCORDANCE WITH THE STANDARD SPECIFICATIONS, SECTION 7-17.3(2).

STREET SPECIFICATIONS

24. THE CONTRACTOR SHALL PROVIDE TO THE ENGINEER A REPORT FROM A QUALIFIED GEOTECHNICAL FIRM ASCERTAINING THE SUBGRADE BEARING CAPACITY AND CERTIFYING THE COMPACTION OF THE GRAVEL BASE UNDER ALL PAVED AREAS.

25. ASPHALT CONCRETE PAVEMENT SHALL BE CLASS "B". MATERIALS AND CONSTRUCTION METHODS SHALL BE IN ACCORDANCE WITH THE STANDARD SPECIFICATIONS, SECTION 5-04, EXCEPT AS MODIFIED HEREIN. CONNECTIONS TO EXISTING PAVEMENT SHALL BE TO A STRAIGHT, NEATLY-TRIMMED LINE.

26. CRUSHED ROCK SURFACING FOR PAVEMENT BASE SHALL BE IN ACCORDANCE WITH STANDARD SPECIFICATION, SECTION 9-03.9(3); BALLAST PER SECTION 9-03-9(1).

27. CEMENT CONCRETE SHALL BE CLASS 3000 (WITH AIR ENTRAINMENT) IN ACCORDANCE WITH THE STANDARD SPECIFICATIONS, SECTION 6-02.3(2)B.

28. CEMENT CONCRETE SIDEWALK SHALL BE CONSTRUCTED AS SHOWN ON THE PLANS OR AS DESIGNATED BY THE ENGINEER, IN ACCORDANCE WITH C.O.F. STANDARDS, DRAWING NO. R-12.

29. CEMENT CONCRETE DRIVEWAYS SHALL BE 6 INCHES THICK AND CONSTRUCTED WHERE SHOWN ON THE PLANS OR DESIGNATED BY THE ENGINEER IN ACCORDANCE WITH C.O.F. STANDARDS, DRAWING NO. R-15. A 2-INCH LAYER OF 3/4 INCH DRAIN ROCK SHALL BE USED FOR DRIVEWAY BEDDING.

30. CEMENT CONCRETE CURB AND GUTTER SHALL BE CONSTRUCTED WHERE SHOWN ON THE PLANS OR AS DESIGNATED BY THE ENGINEER, IN ACCORDANCE WITH STANDARD SPECIFICATIONS, SECTION 8-04 AND C.O.F. STANDARDS, DRAWING NO. R-9, R-14, AND ST-8. WHERE NEW CEMENT CONCRETE CURB AND GUTTER IS TO BE CONSTRUCTED TO CONNECT TO EXISTING CURBED ROADWAY, CARE SHALL BE TAKEN TO ASSURE THAT NO ABRUPT OFFSETS IN LINE OR GRADE SHALL BE CONSTRUCTED WHICH WILL BE UNSIGHTLY OR IMPEDE FLOW IN THE GUTTER LINE.

31. THRU-CURB BASINS AND THRU-CURB INLETS CONFORMING TO THE STANDARD SPECIFICATIONS, SECTION 7-05 SHALL BE CONSTRUCTED AT THE LOW POINTS OF THE CURBS AND TO THE LOCATIONS, DIMENSIONS, AND DETAILS AS SHOWN ON THE PLANS OR DESIGNATED BY THE ENGINEER AND C.O.F. STANDARDS, DRAWING NO. ST-8.

32. TRENCH EXCAVATIONS, BEDDING, AND PIPE FOR STORMWATER PIPE LAYING SHALL BE IN ACCORDANCE WITH THE STANDARD SPECIFICATIONS, SECTION 7-08.

33. STORM SEWER PIPE CONSTRUCTION REQUIREMENTS SHALL BE IN ACCORDANCE WITH THE STANDARD SPECIFICATION, SECTION 7-04. MATERIAL SHALL BE HANCOR HI-Q OR EQUAL. LOTS STORM DRAIN SERVICE LINE SHALL BE 6" PVC PER THE STANDARD SPECIFICATIONS, SECTION 9-05.1(5).

MISCELLANEOUS NOTES

34. RIP-RAP SHALL BE "HAND PLACED RIP-RAP" IN ACCORDANCE WITH THE STANDARD SPECIFICATIONS, SECTION 9-13.2.

35. BIOSWALE SIDE SLOPES SHALL BE COVERED WITH EROSION CONTROL SEED MATTING.

APPROVED

APR 24 2000

BY [signature]
CITY OF FERNDALE

RECORD DRAWING - 01/22/99

CORRELL PARK, P.U.D.
HOMESTEAD NORTHWEST, INC.
COVER SHEET
00034.001 2.10.00 KR

DAVID EVANS AND ASSOCIATES, INC.
119 GRAND AVENUE, SUITE D
BELLINGHAM, WA 98225-4400 (360) 647-7151

REVISIONS
12-19-97 CITY REVISIONS

1 OF 19 SHEETS

SCALE: N.T.S. DESIGN: CRP
DATE: 12-18-97 DRAWN: DVM.A.
FILE: HMNW0022/CVD1.A CHECKED:

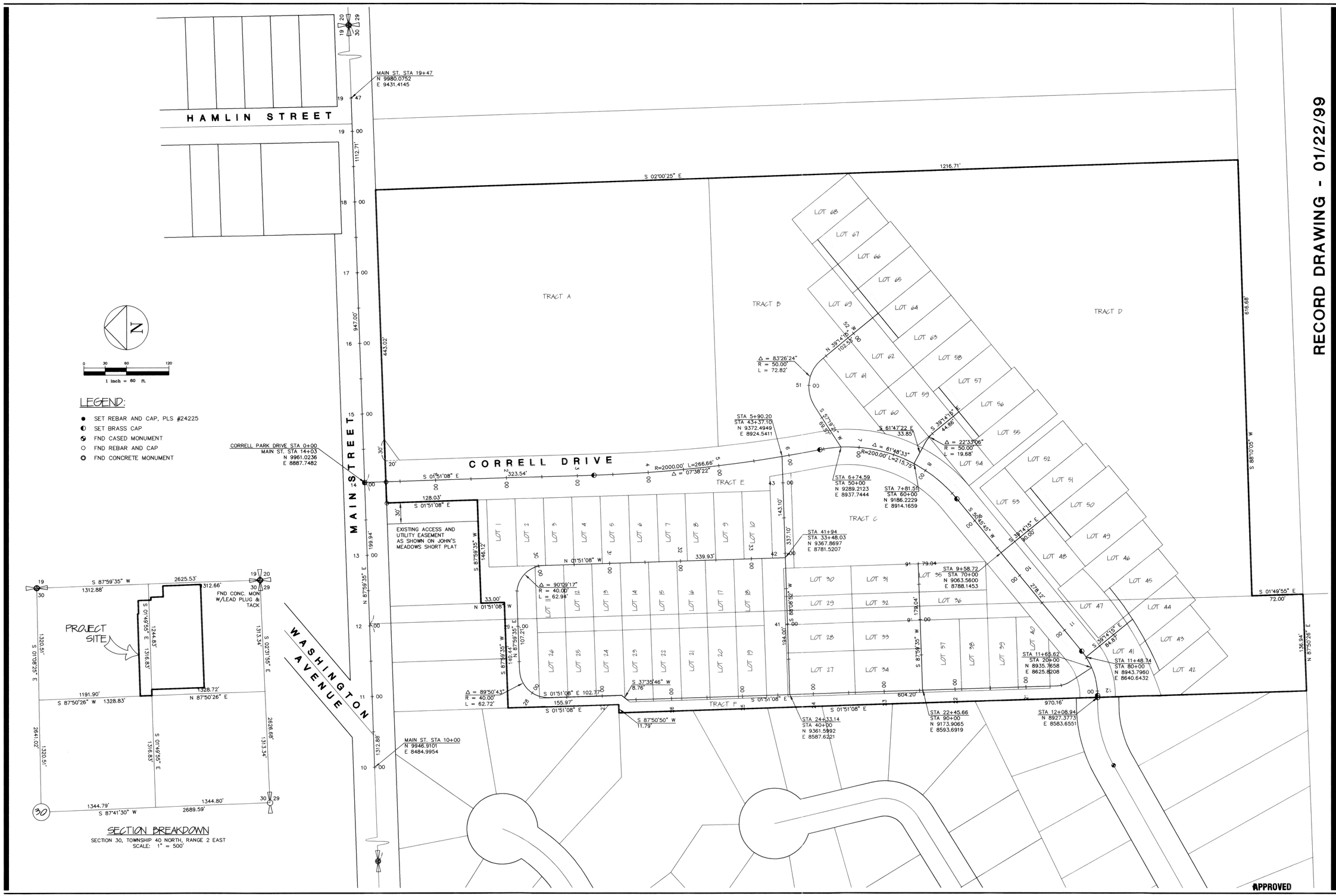

APR 24 2000
BY Laura T. Spaeny
CITY OF FERNDALE

RECORD DRAWING - 01/22/99

CORRELL PARK, P.U.D.

HOMESTEAD NORTHWEST, INC.

SURVEY CONTROL PLAN

0002-1.002 2-10-00 KR

DAVID EVANS AND ASSOCIATES, INC
119 GRAND AVENUE, SUITE D
BELLINGHAM, WA 98225-4400 (360) 647-7151

REGISTERED PROFESSIONAL ENGINEER
STATE OF WASHINGTON
BILLIAN L. LOWE
EXPIRES 7/4/99

REVISIONS
12-24-97 CORRELL ROW AND EASEMENT

SHEETS 2 OF 19

SCALE: 1" = 60'
DESIGN: CRP
DATE: 12-18-97
DRAWN: SLG
FILE: HNNW0022/SC02A.DWG
CHECKED:

RECORD DRAWING - 07/22/98

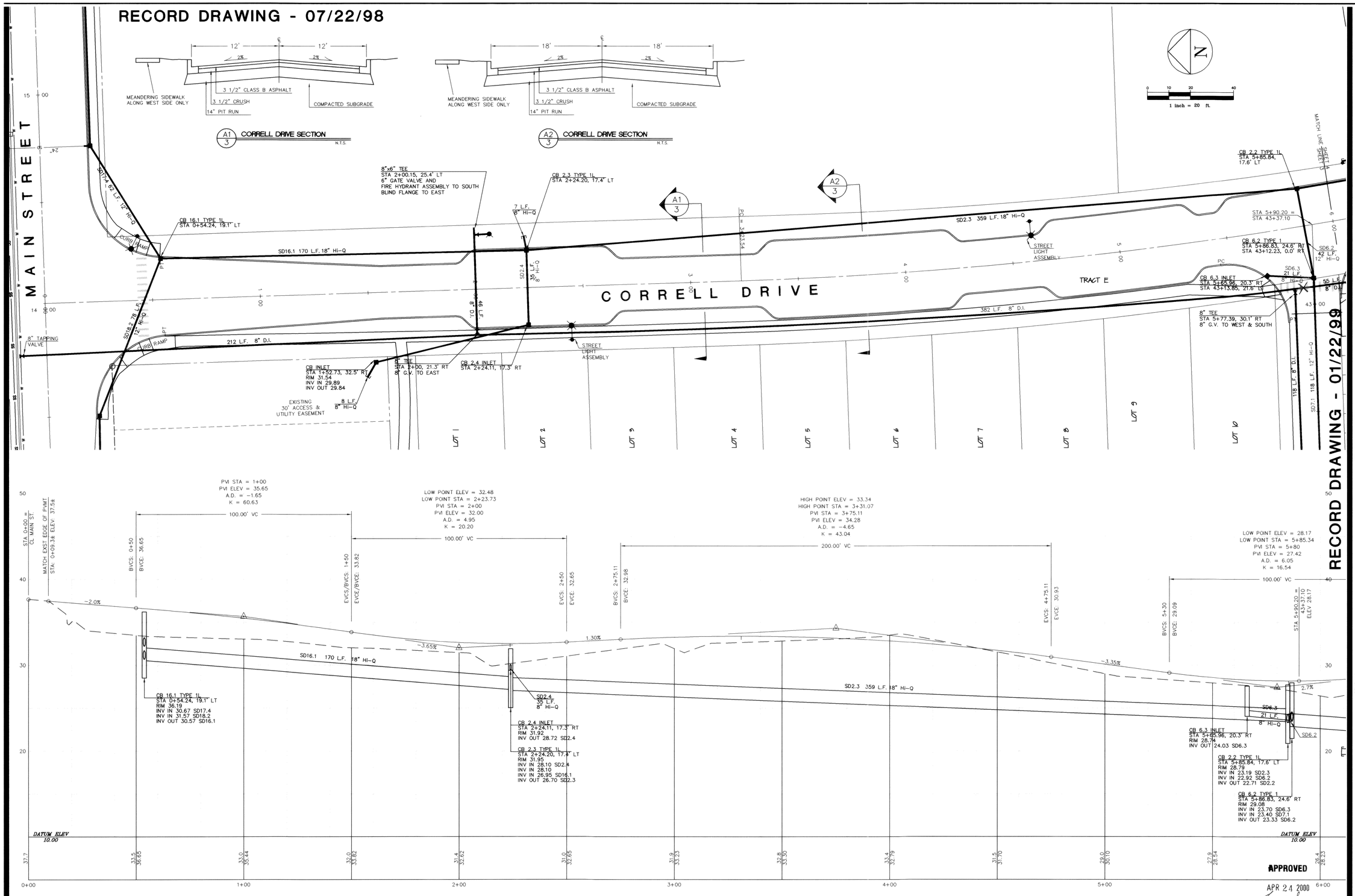

CORRELL PARK, P.U.D.

CORRELL DRIVE PLAN / PROFILE

STA: 0+00 - 6+00

CCO 21.003 2-10-00 KR

DAVID EVANS AND ASSOCIATES, INC.
119 GRAND AVENUE, SUITE D
BELLINGHAM, WA 98225-4400 (360) 647-7151

REVISIONS
RECORD DRAWING - 07/22/98 SLG

SHEET 3 OF 19 SHEETS

SCALE: H: 1" = 20' V: 1" = 5'
DESIGN: CPR
DATE: 07/22/98
DRAWN: SLG
FILE: HNNWO022/RDO3A.DWG
CHECKED:

P:\P\HNNWO022\RDO3a.dwg Fri Jan 22 14:28:25 1999 DAVID EVANS AND ASSOCIATES - GeLA

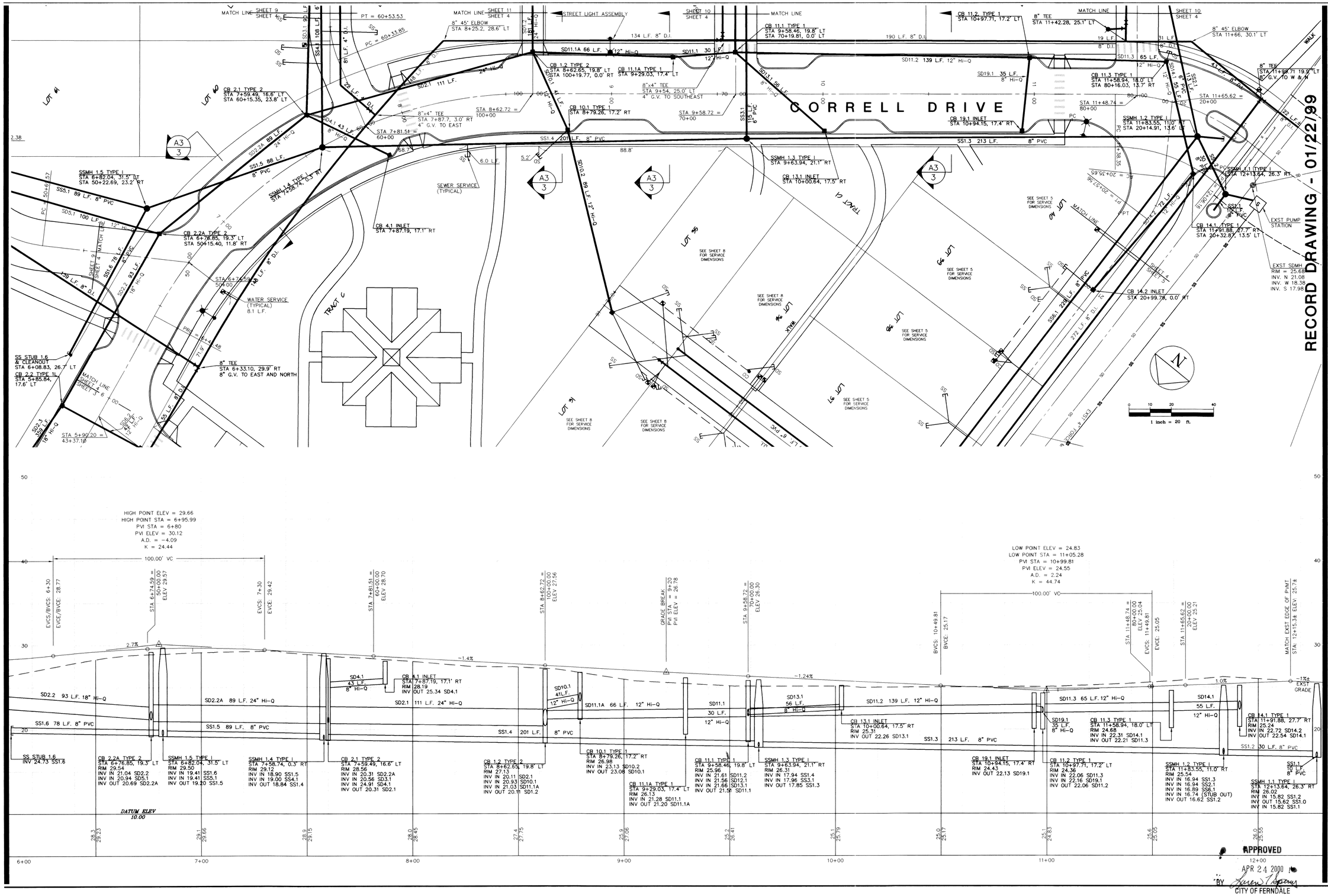

APPROVED
APR 24 2000
BY
CITY OF FERNDALE

RECORD DRAWING - 01/22/99

CORRELL PARK, P.U.D.
CORRELL DRIVE PLAN / PROFILE
STA: 6+00 - 12+50

000 21.004 2-10-00 KW

DAVID EVANS AND ASSOCIATES, INC.
119 GRAND AVENUE, SUITE D
BELLINGHAM, WA 98225-4400 (360) 647-7151

REGISTERED PROFESSIONAL ENGINEER — STATE OF WASHINGTON — SCOTT L. GUILLAS — 18321 — EXPIRES 7/4/99

REVISIONS
RECORD DRAWING - 07/22/98 SLG

SHEET 4 OF 19 SHEETS

SCALE: H: 1" = 20' V: 1" = 5'
DESIGN: CPR
DATE: 07/22/98
DRAWN: SLG
FILE: HMNW0022/RD03A.DWG
CHECKED:

P:\P\HMNW0022\Rd03a.dwg Mon Jan 25 09:36:13 1999 DAVID EVANS AND ASSOCIATES - GuLA

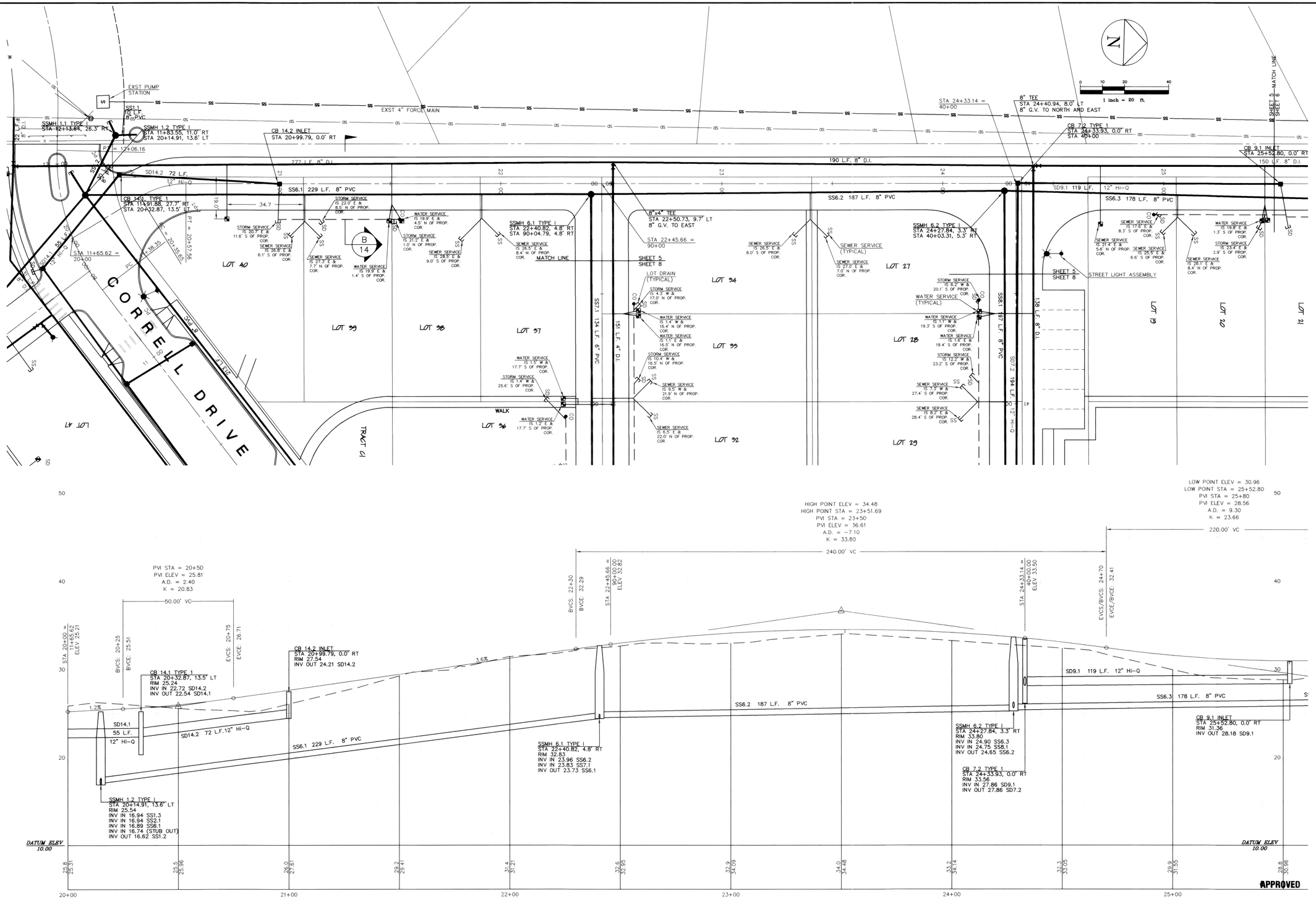

APPROVED
APR 24 2000
BY
CITY OF FERNDALE

RECORD DRAWING - 01/22/99

CORRELL PARK, P.U.D.

PLAN / PROFILE

STA: 20+00 - 25+50

00084.005 2.10.06 KR

DAVID EVANS AND ASSOCIATES, INC.
119 GRAND AVENUE, SUITE D
BELLINGHAM, WA 98225-4400 (360) 647-7151

REGISTERED PROFESSIONAL ENGINEER
STATE OF WASHINGTON
SHELDON P. BRATT
EXPIRES 7/4/99

REVISIONS
RECORD DRAWING - 07/22/98 SLG

5 OF 19 SHEETS

SCALE: H: 1" = 20' V: 1" = 5'
DESIGN: CPR
DATE: 07/22/98
DRAWN: SLG
FILE: HNNW0022/RD03A.DWG
CHECKED:

P:\P\HNNW0022\RD03a.dwg Fri Jan 22 14:31:26 1999 DAVID EVANS AND ASSOCIATES - GuLA

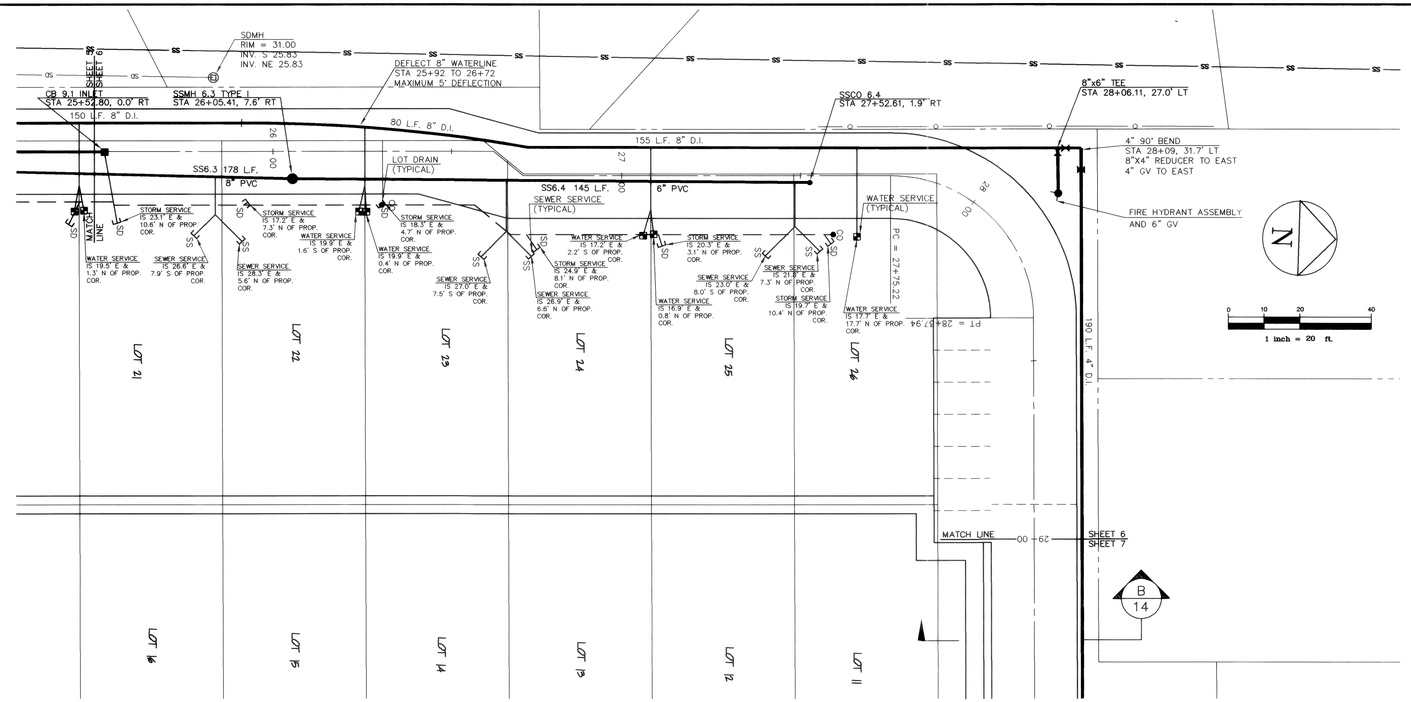

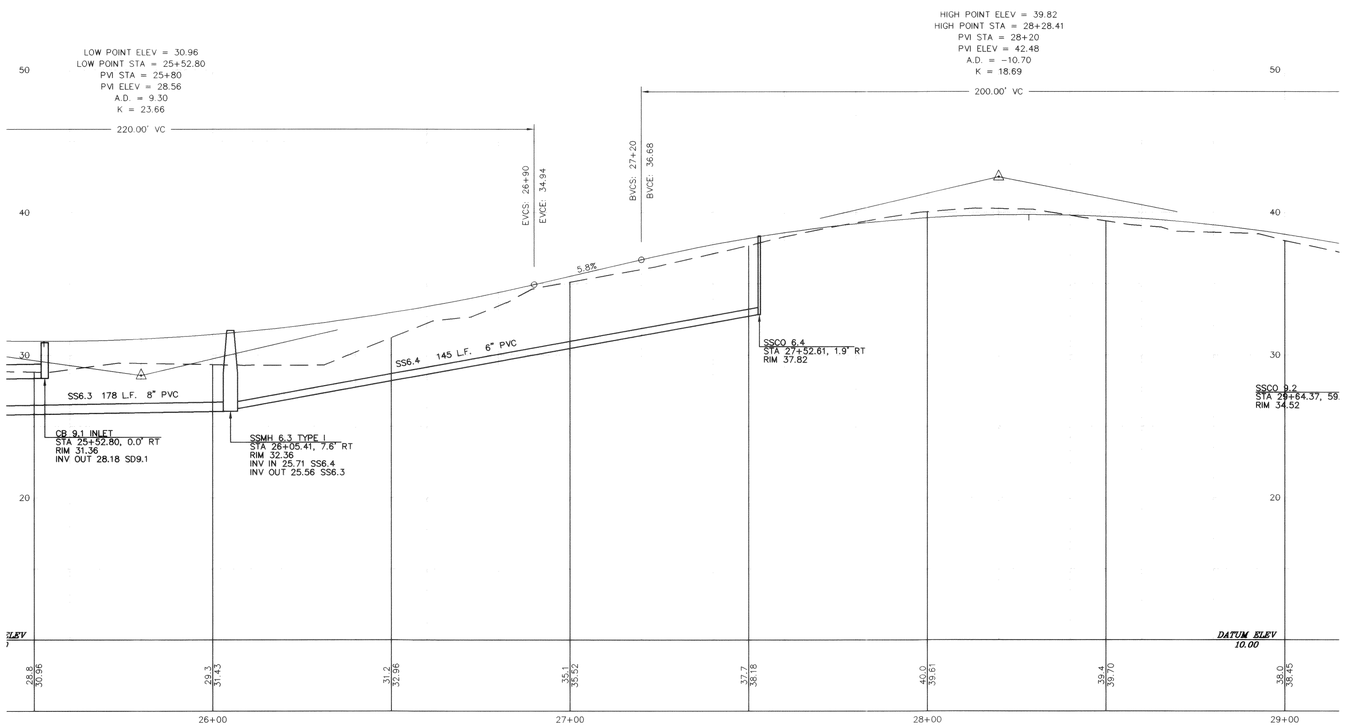

APPROVED

APR 24 2000

BY Laurie Spearing
CITY OF FERNDALE

RECORD DRAWING - 01/22/99

CORRELL PARK, P.U.D.

PLAN / PROFILE

STA: 25+50 - 29+00

00034.000 2-10-00 KR

DAVID EVANS AND ASSOCIATES, INC
119 GRAND AVENUE, SUITE D
BELLINGHAM, WA 98225-4400 (360) 647-7151

REVISIONS
RECORD DRAWING - 07/22/98 SLG

6 OF 19 SHEETS

SCALE: H: 1" = 20' V: 1" = 5'
DESIGN: CPR
DATE: 07/22/98
DRAWN: SLG
FILE: HMN00022/RD03A.DWG
CHECKED:

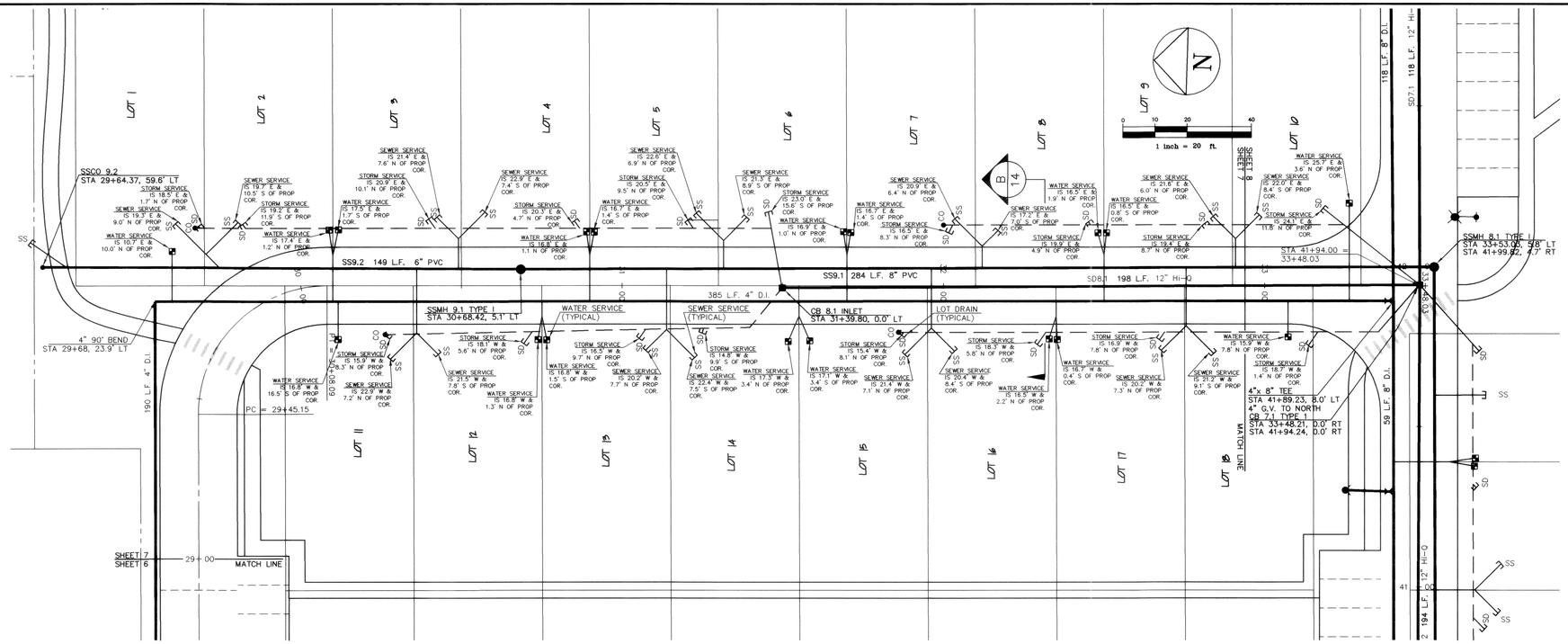

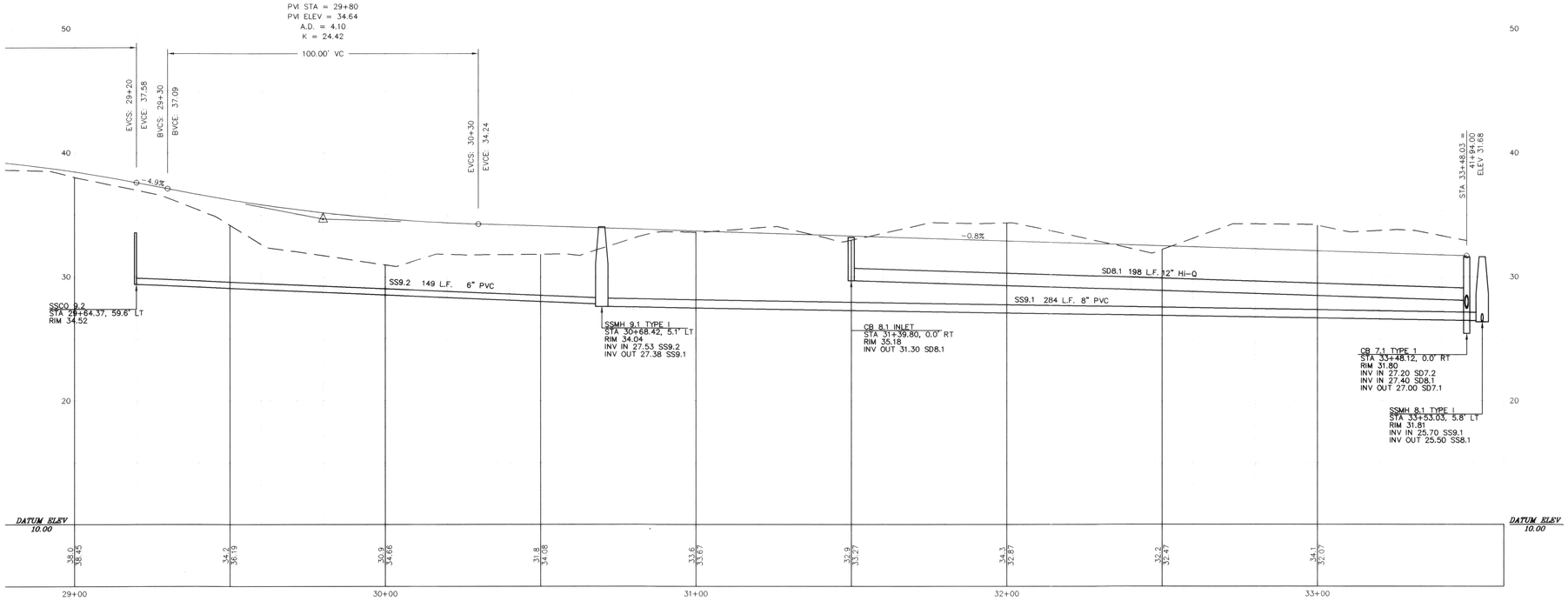

APPROVED

APR 24 2000

BY Karen Joseph

CITY OF FERNDALE

RECORD DRAWING - 01/22/99

CORRELL PARK, P.U.D.

PLAN / PROFILE

STA: 29+00 - 33+50

00036.007 2.10.00 KR

DAVID EVANS AND ASSOCIATES, INC
119 GRAND AVENUE, SUITE D
BELLINGHAM, WA 98225-4400 (360) 647-7151

REVISIONS

RECORD DRAWING - 07/22/98 SLG

7 OF 19 SHEETS

SCALE: H: 1" = 20' V: 1" = 5'

DESIGN: CPR

DATE: 07/22/98

DRAWN: SLG

FILE: HMNW0022/RD03A.DWG

CHECKED:

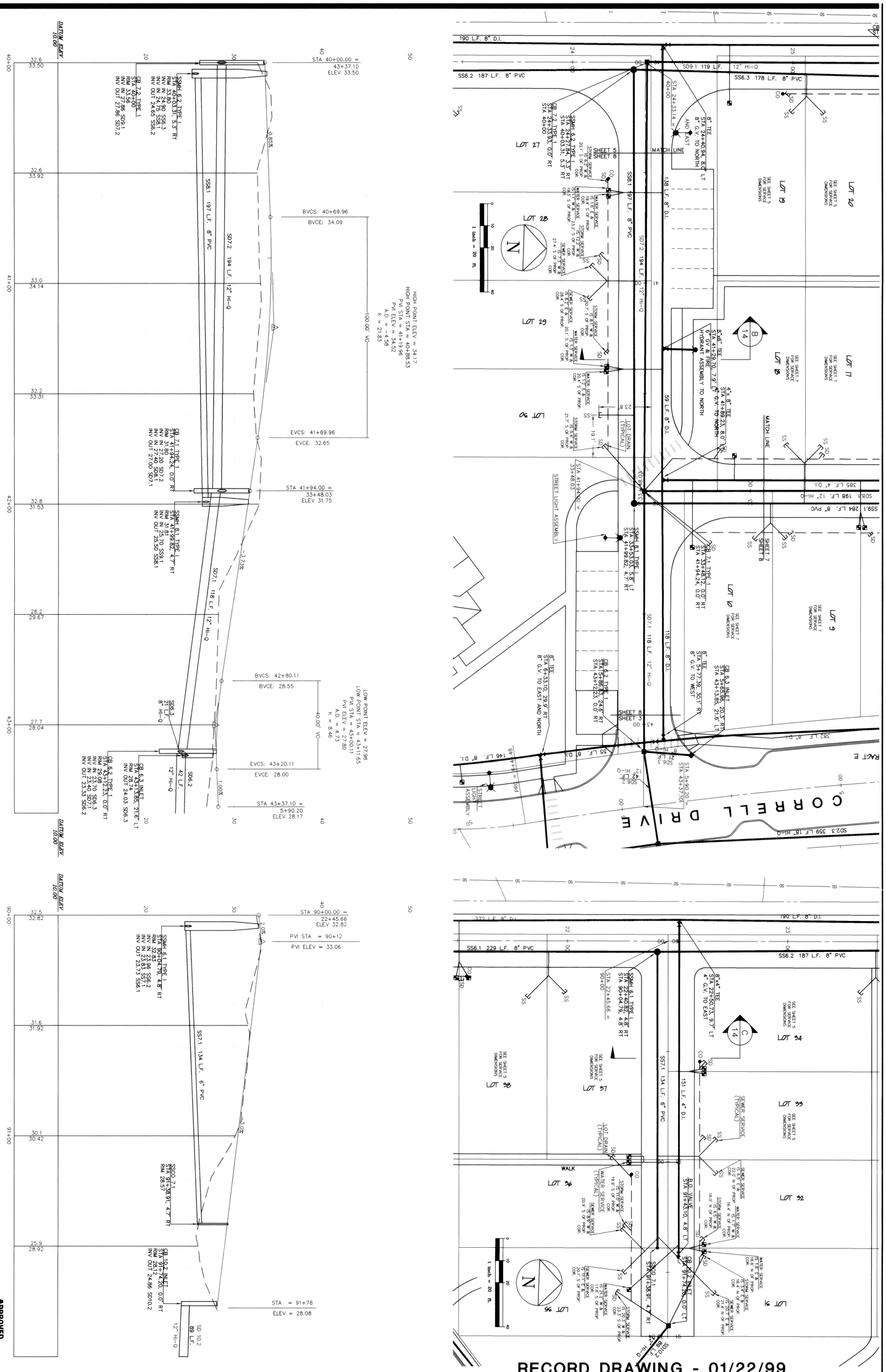

RECORD DRAWING - 01/22/99

APPROVED
APR 24 2000
BY
CITY OF FERNDALE

8 OF 19 SHEETS	REVISIONS: RECORD DRAWING - 07/22/98 SLG		
SCALE: H: 1" = 20' V: 1" = 5'	DESIGN: CPR		
DATE: 07/22/98	DRAWN: SLG		
FILE: HMNW0022/ RD03A.DWG	CHECKED:		

CHARLES P. RUDY STATE OF WASHINGTON 18331 PROFESSIONAL LAND SURVEYOR EXPIRES 7/4/99

DAVID EVANS AND ASSOCIATES, INC
119 GRAND AVENUE, SUITE D
BELLINGHAM, WA 98225-4400 (360) 647-7151

CORRELL PARK, P.U.D.

PLAN / PROFILE, STA: 40+00 - 43+37
PLAN / PROFILE, STA: 90+00 - 91+79

00034.008 2.10.00 KR

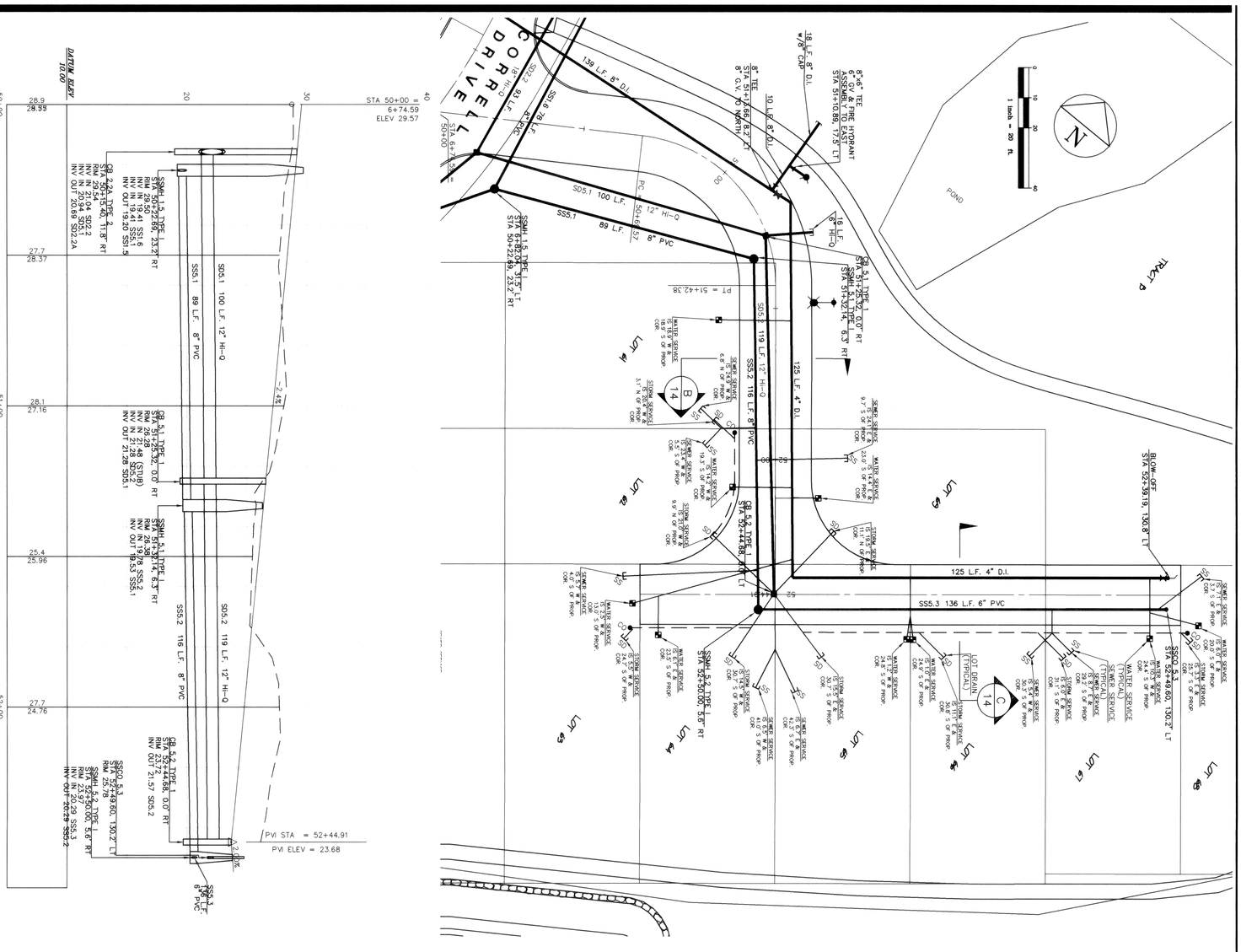

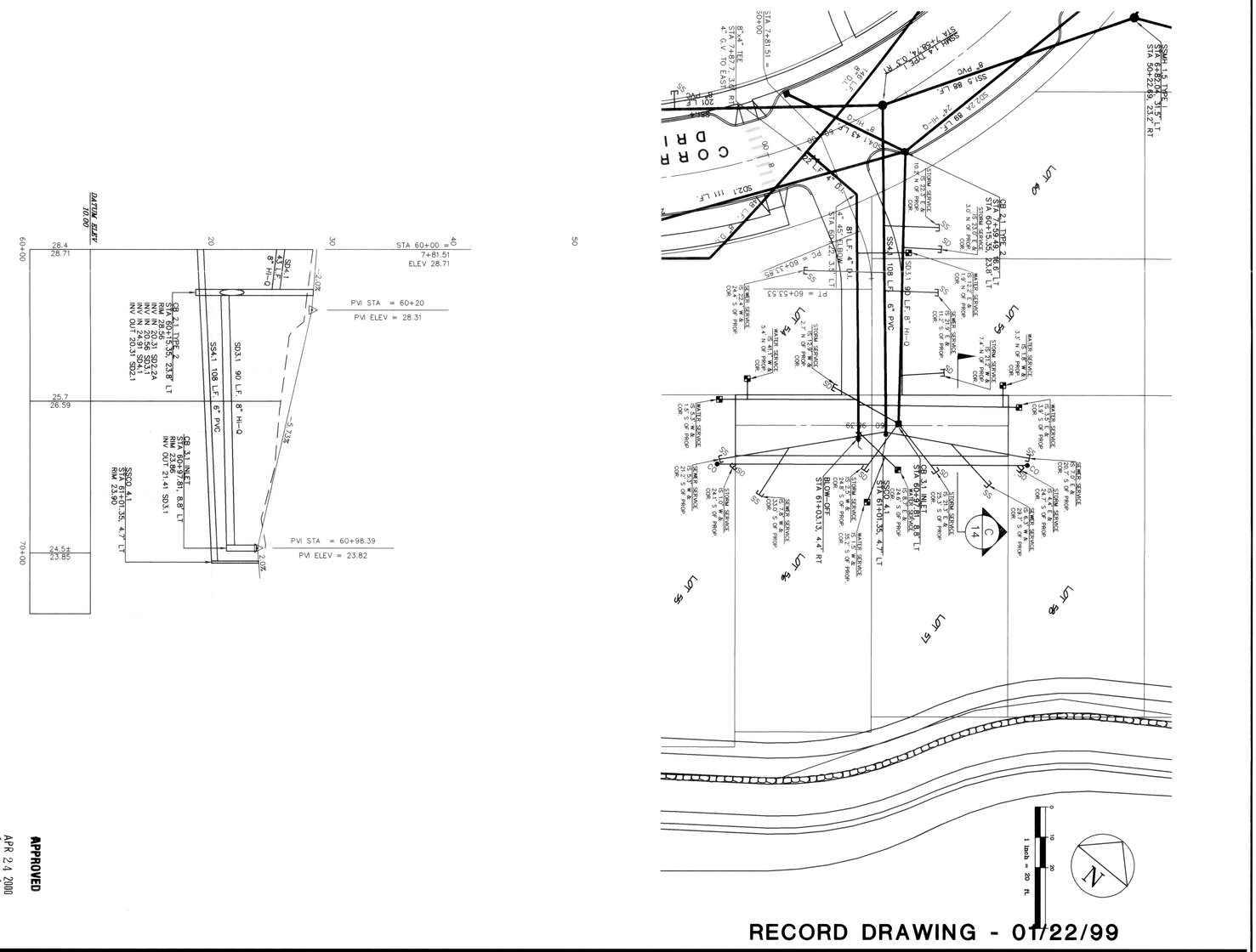

APPROVED
APR 24 2000
BY
CITY OF TERRYDALE

RECORD DRAWING - 07/22/99

9 OF 19 SHEETS	REVISIONS	
SCALE: H: 1" = 20' V: 1" = 5'	DESIGN: CPR	RECORD DRAWING - 07/22/98 SLG
DATE: 07/22/98	DRAWN: SLG	
FILE: HMNW0022/ RD03A.DWG	CHECKED:	

CHARLES F. LUNDY, REGISTERED PROFESSIONAL LAND SURVEYOR, STATE OF WASHINGTON, EXPIRES 7/4/99

DAVID EVANS AND ASSOCIATES, INC.
119 GRAND AVENUE, SUITE D
BELLINGHAM, WA 98225-4400 (360) 647-7151

CORRELL PARK, P.U.D.

PLAN / PROFILE, STA: 50+00 - 52+45
PLAN / PROFILE, STA: 60+00 - 61+00

00034.009 2-10-04 KR

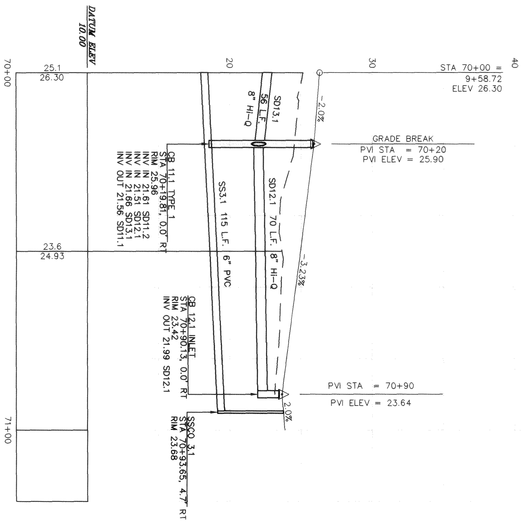

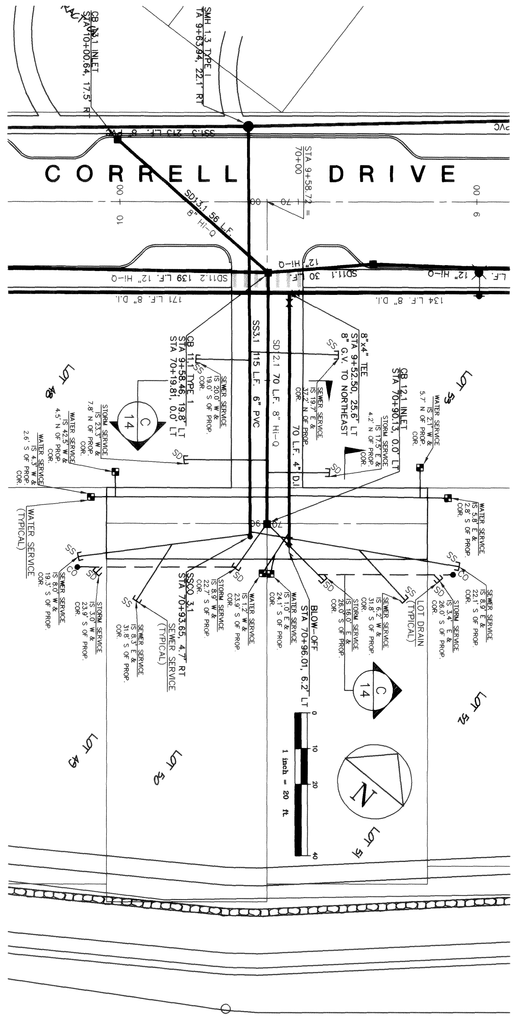

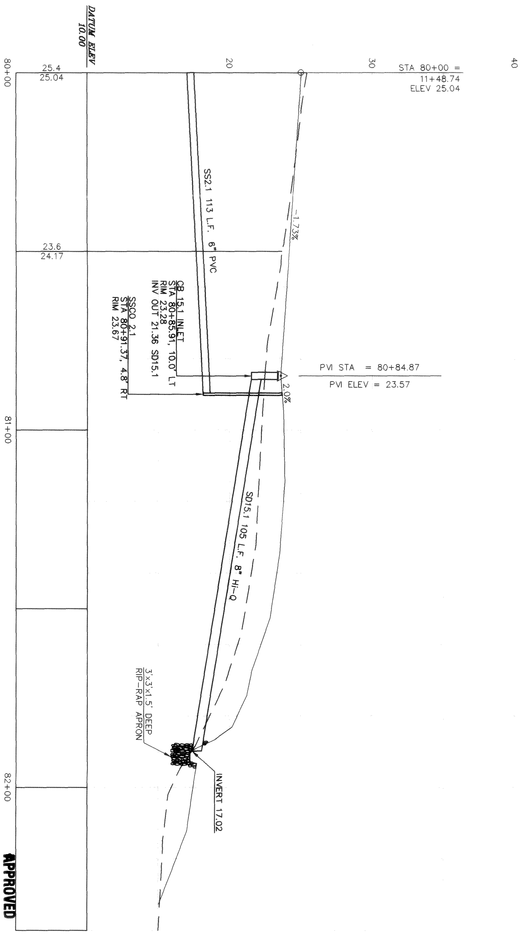

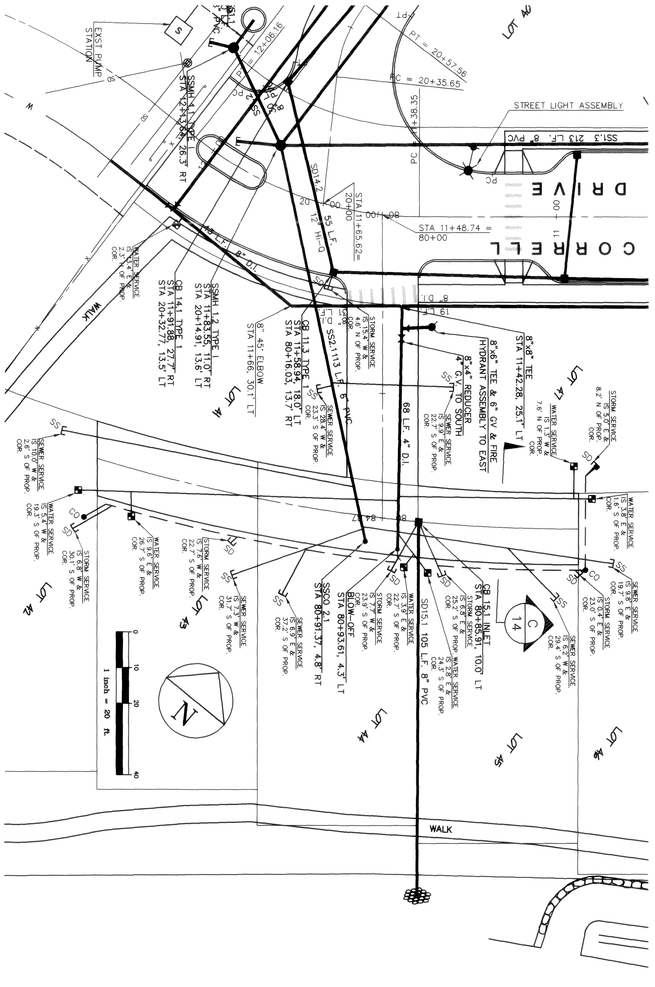

APPROVED
APR 24 2000
BY: [signature]
CITY OF FERNDALE

RECORD DRAWING - 01/22/99

10 OF 19 SHEETS		REVISIONS	
SCALE: H: 1" = 20' V: 1" = 5'	DESIGN: CPR	RECORD DRAWING - 07/22/98 SLG	
DATE: 07/22/98	DRAWN: SLG		
FILE: HMNW0022/ RD03A.DWG	CHECKED:		

CHARLES P. SMITH, REGISTERED PROFESSIONAL LAND SURVEYOR, STATE OF WASHINGTON — EXPIRES 7/4/99

DAVID EVANS AND ASSOCIATES, INC.
119 GRAND AVENUE, SUITE D
BELLINGHAM, WA 98225-4400 (360) 647-7151

CORRELL PARK, P.U.D.

PLAN / PROFILE, STA: 70+00 - 70+90
PLAN / PROFILE, STA: 80+00 - 80+85

00034.010 2·10·06 KR

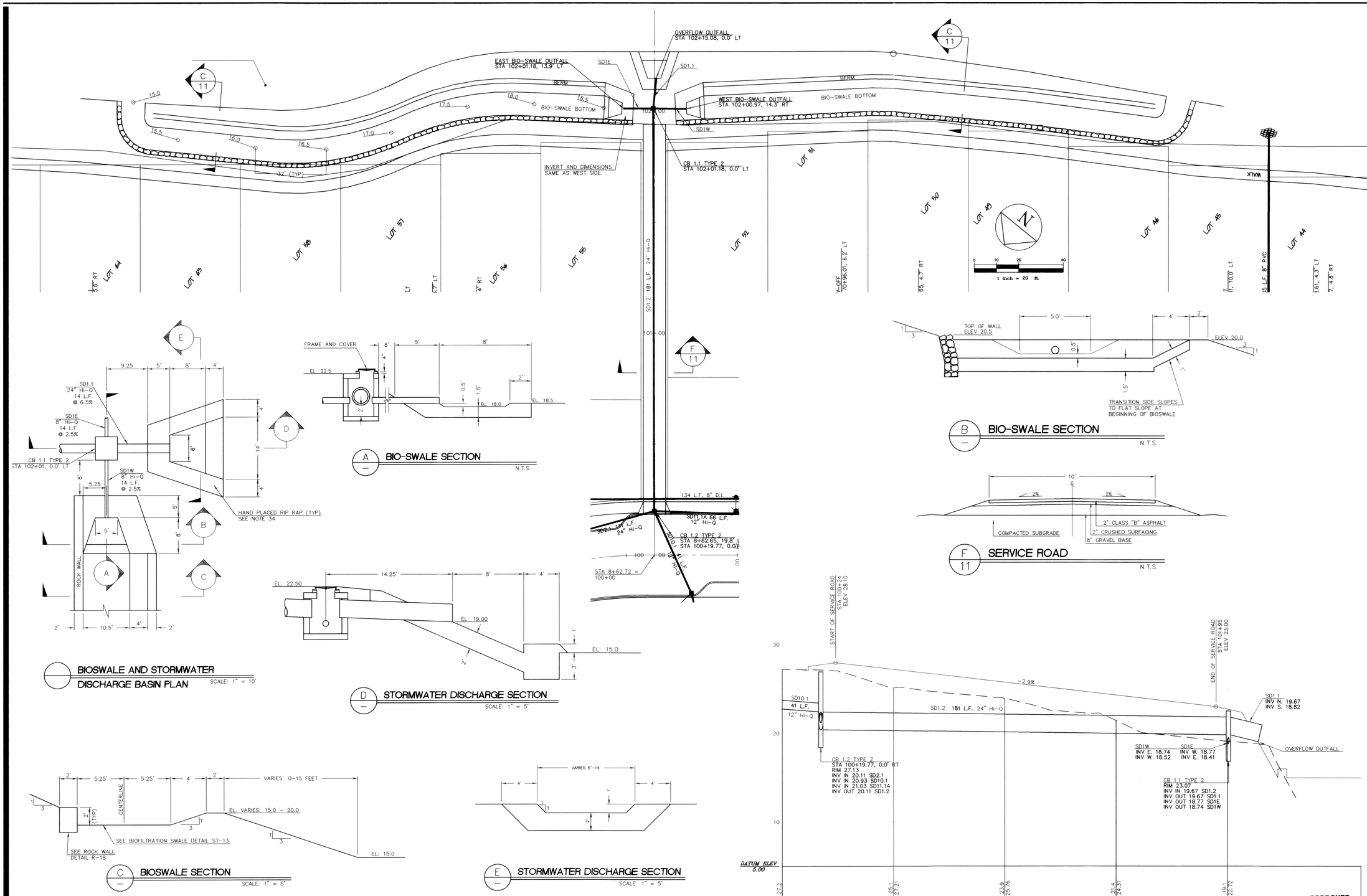

BIOSWALE AND STORMWATER DISCHARGE BASIN PLAN
SCALE: 1" = 10'

A BIO-SWALE SECTION
N.T.S.

B BIO-SWALE SECTION
N.T.S.

F 11 SERVICE ROAD
N.T.S.

D STORMWATER DISCHARGE SECTION
SCALE: 1" = 5'

C BIOSWALE SECTION
SCALE: 1" = 5'

E STORMWATER DISCHARGE SECTION
SCALE: 1" = 5'

APPROVED
APR 24 2000
BY CITY OF FERNDALE

RECORD DRAWING | 01/22/99

CORRELL PARK, P.U.D.
HOMESTEAD NORTHWEST, INC.
BIO-SWALE PLAN / PROFILE & DETAILS

0003d.011 2·10·00 KR

DAVID EVANS AND ASSOCIATES, INC.
119 GRAND AVENUE, SUITE D
BELLINGHAM, WA 98225-4400 (360) 647-7101

REVISIONS
RECORD DRAWING - 07/22/98 SLG

SHEET 11 OF 19

SCALE: H: 1" = 20' V: 1" = 5'
DATE: 07/22/98
DESIGN: CPR
DRAWN: SLG
RE: HMNW0022/ RO03A.DWG
CHECKED:

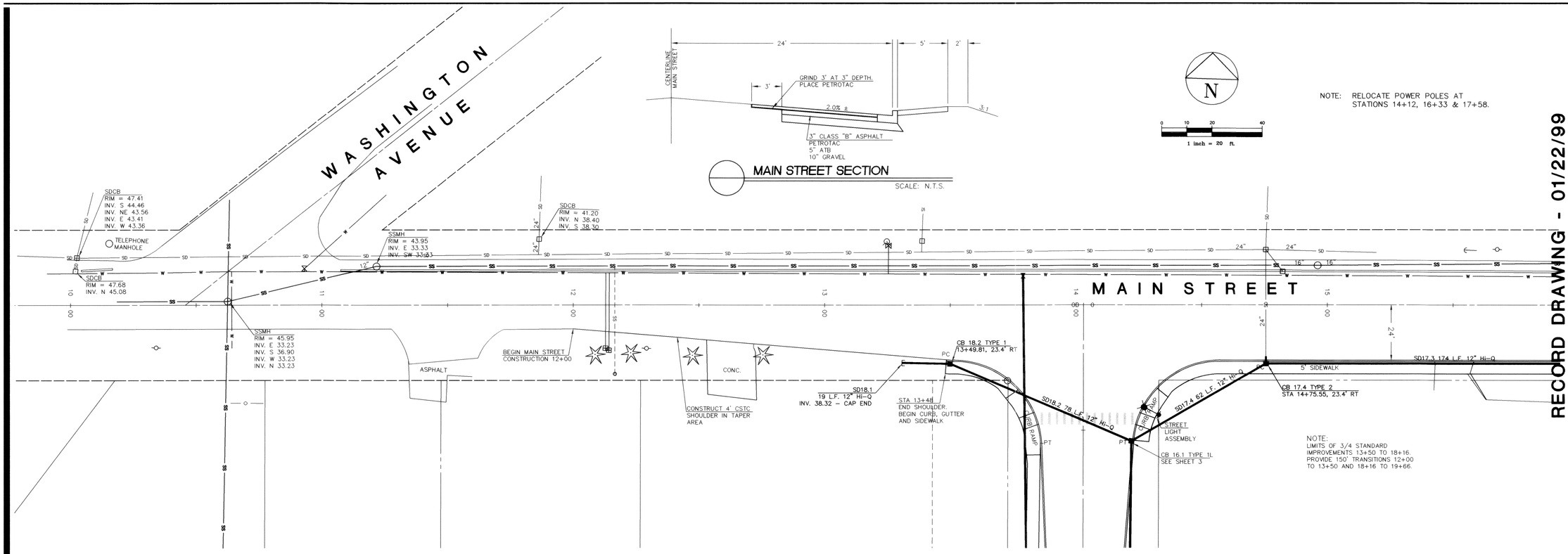

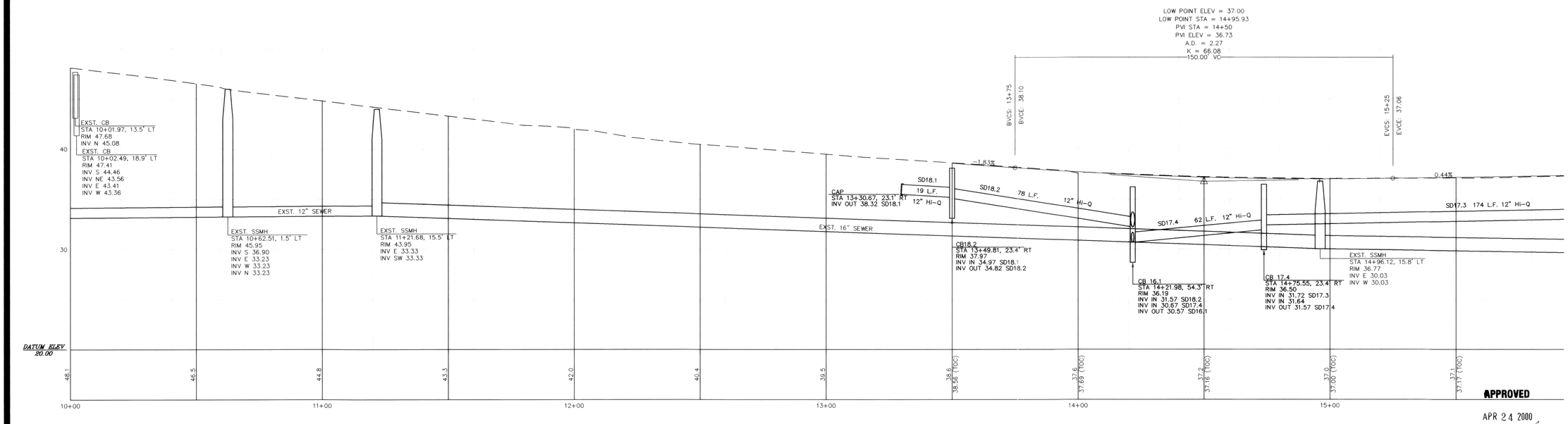

APPROVED

APR 24 2000

BY _____
CITY OF FERNDALE

RECORD DRAWING - 01/22/99

CORRELL PARK, P.U.D.

MAIN STREET PLAN / PROFILE

STA: 10+00 - 15+50

00024.012 2-10-06 KR

DAVID EVANS AND ASSOCIATES, INC
119 GRAND AVENUE, SUITE D
BELLINGHAM, WA 98225-4400 (360) 647-7151

PHILLIP B. PIRI — STATE OF WASHINGTON — REGISTERED PROFESSIONAL ENGINEER — EXPIRES 7/4/99

REVISIONS
RECORD DRAWING – 07/22/98 SLG

SHEET 12 OF 19 SHEETS

SCALE: H: 1" = 20' V: 1" = 5'
DESIGN: CPR
DATE: 07/22/98
DRAWN: SLG
FILE: HMNW0022/RD03A.DWG
CHECKED:

P:\HMNW0022\RD03a.dwg Fri Jan 22 15:56:26 1999 DAVID EVANS AND ASSOCIATES - GJLA

APPROVED
APR 24 2000
BY
CITY OF FERNDALE

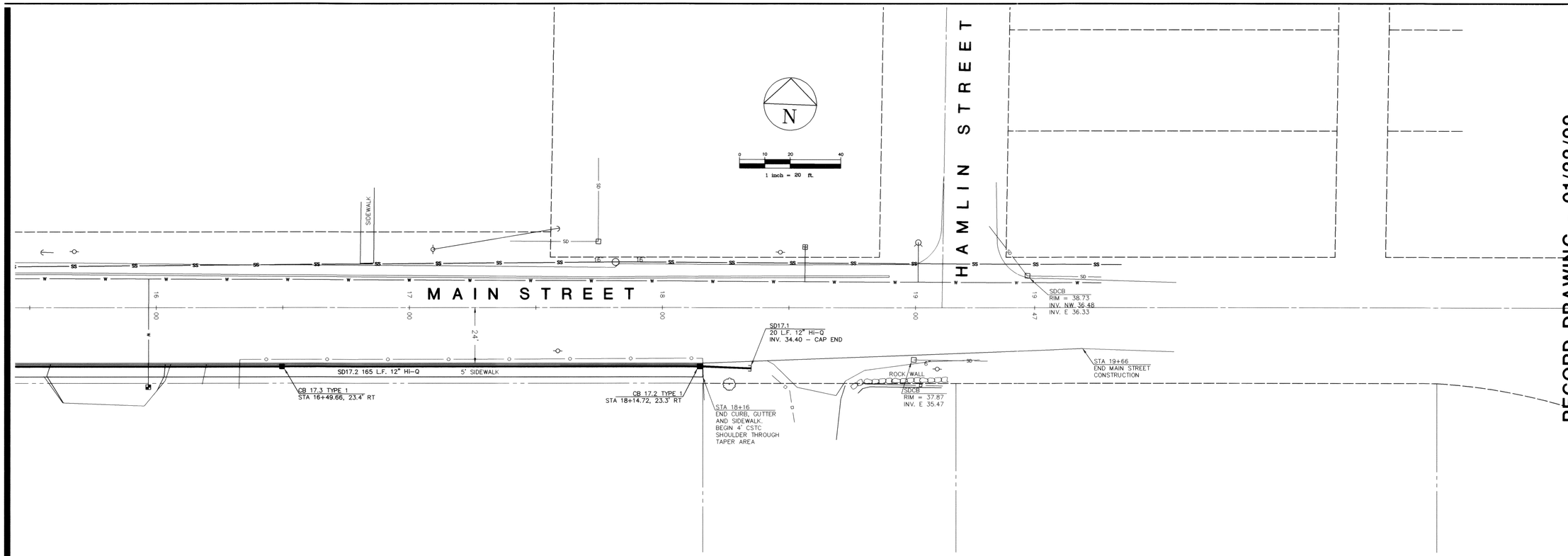

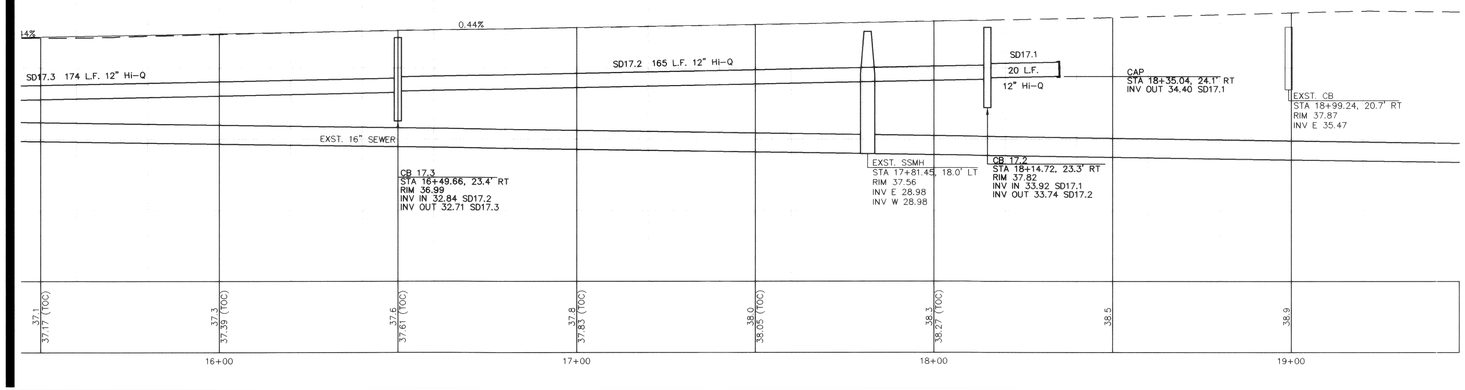

RECORD DRAWING - 01/22/99

CORRELL PARK, P.U.D.

MAIN STREET PLAN / PROFILE

STA: 15+50 - 19+50

0003H.013 2:10:00 KR

DAVID EVANS AND ASSOCIATES, INC.
119 GRAND AVENUE, SUITE D
BELLINGHAM, WA 98225-4400 (360) 647-7161

REGISTERED PROFESSIONAL ENGINEER
STATE OF WASHINGTON
GUILLERMO P. SALAZAR
EXPIRES 7/4/99

REVISIONS
RECORD DRAWING – 07/22/98 SLG

13 OF 19 SHEETS

SCALE: H: 1" = 20' V: 1" = 5'
DESIGN: CPR
DATE: 07/22/98
DRAWN: SLG
FILE: HMNW0022/RD03A.DWG
CHECKED:

P:\PHMNW0022\RD03a.dwg Fri Jan 22 15:56:04 1999 DAVID EVANS AND ASSOCIATES - GULA

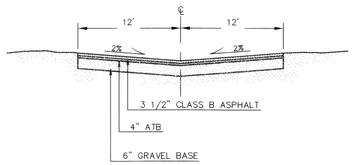

B COLLECTOR STREET SECTION
VARIOUS N.T.S.

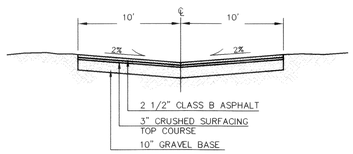

C ALLEY SECTION
VARIOUS N.T.S.

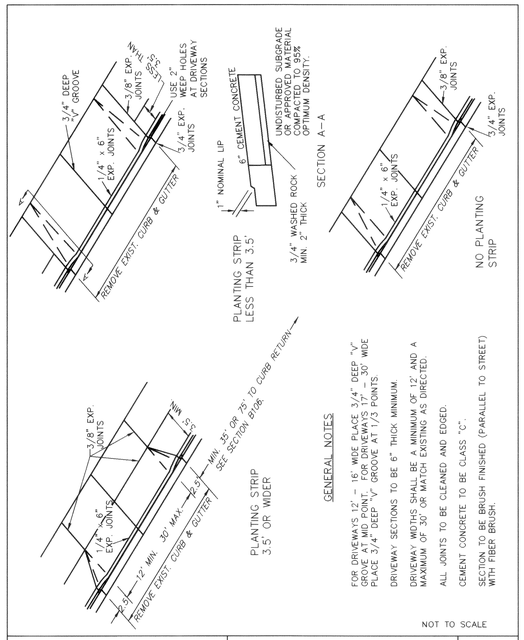

APPROVED	CITY OF FERNDALE	DRAWING
Public Works Director Date	**MINIMUM STANDARD DRIVEWAY SECTIONS**	**R-6**

JANUARY 1993

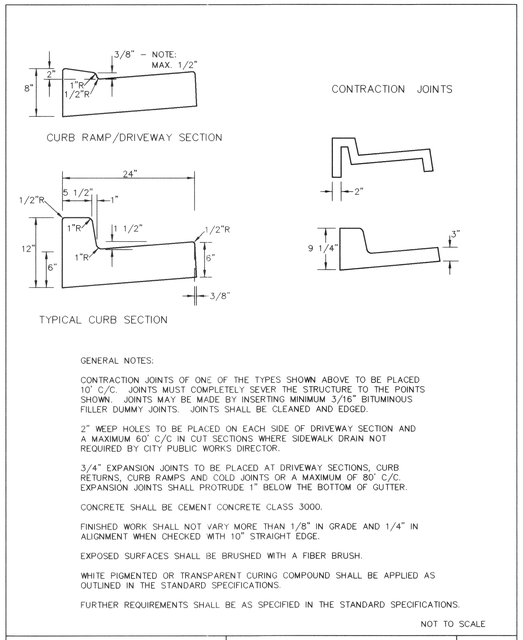

APPROVED	CITY OF FERNDALE	DRAWING
Public Works Director Date	**TYPE "A" MODIFIED CURB AND GUTTER**	**R-9**

JUNE 1995

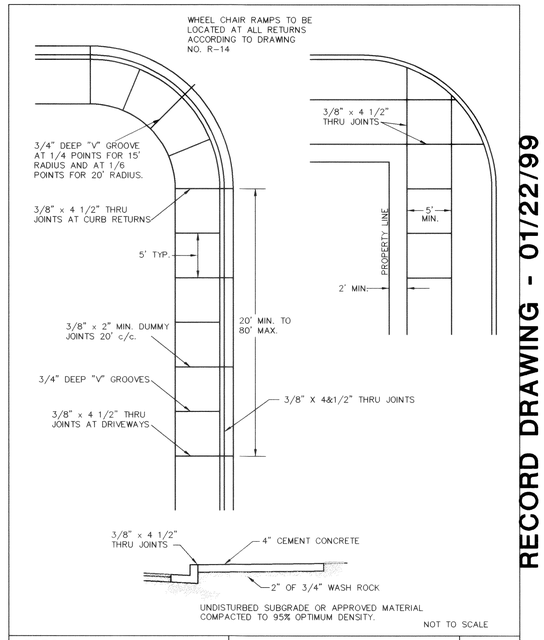

APPROVED	CITY OF FERNDALE	DRAWING
Public Works Director Date	**TYPICAL SIDEWALK PLAN AND CROSS SECTION**	**R-12**

JUNE 1995

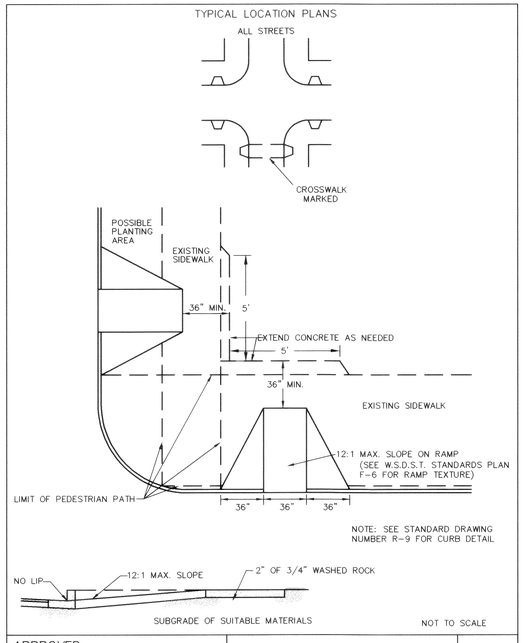

APPROVED	CITY OF FERNDALE	DRAWING
Public Works Director Date	**MINIMUM STANDARD CURB RAMPS**	**R-14**

JUNE 1995

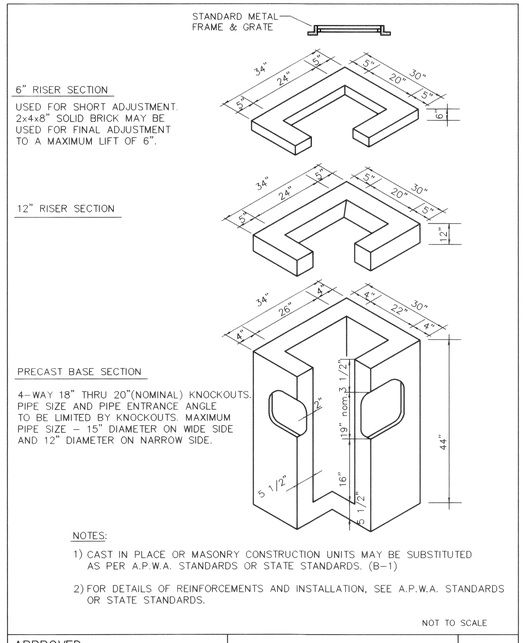

APPROVED	CITY OF FERNDALE	DRAWING
Public Works Director Date	**CATCH BASIN TYPE 1**	**ST-1**

JUNE 1995

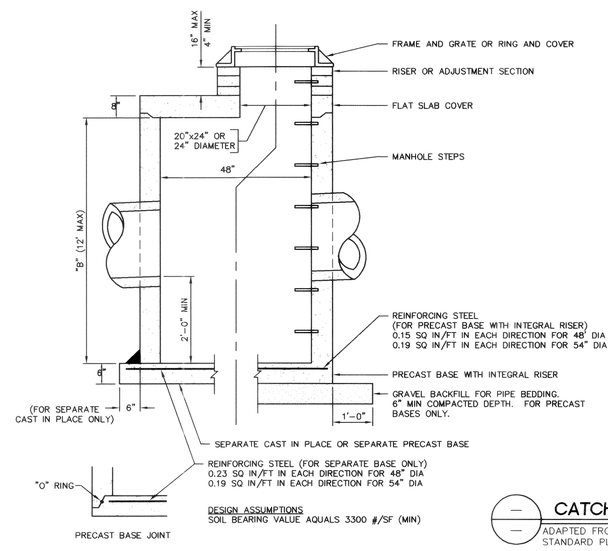

NOTES:

CATCH BASINS TO BE CONSTRUCTED IN ACCORDANCE WITH ASTM C 478 (AASHTO M 199) & ASTM C 890 UNLESS OTHERWISE SHOWN ON PLANS OR NOTED IN THE STANDARD SPECIFICATIONS.

HANDHOLDS IN RISER OR ADJUSTMENT SECTION SHALL HAVE 3" MINIMUM CLEARANCE. STEPS IN CATCH BASIN SHALL HAVE 6" MINIMUM CLEARANCE. NO STEPS ARE REQUIRED WHEN "B" IS 4' OR LESS.

ALL REINFORCED CAST IN PLACE CONCRETE SHALL BE CLASS A. ALL PRECAST CONCRETE SHALL OBTAIN 4000 PSI @ 28 DAYS.

PRECAST BASES SHALL BE FURNISHED WITH CUTOUTS OR KNOCK-OUTS. KNOCKOUTS SHALL HAVE A WALL THICKNESS OF 2" MINIMUM.

KNOCK OUT OR CUTOUT HOLE SIZE IS EQUAL TO PIPE OUTER DIAMETER PLUS CATCH BASIN WALL THICKNESS. MAXIMUM HOLE SIZE IS 36" FOR 48" CATCH BASIN, 42" FOR 54" CATCH BASIN MINIMUM DISTANCE BETWEEN HOLES IS 8".

FRAME AND GRATE OR RING AND COVER SHALL BE IN ACCORDANCE WITH STANDARD SPECIFICATIONS AND MEET THE STRENGTH REQUIREMENTS OF FEDERAL SPECIFICATION RR-F-621D. MATING SURFACES SHALL BE FINISHED TO ASSURE NON-ROCKING FIT.

ALL BASE REINFORCING STEEL SHALL HAVE A MINIMUM YIELD STRENGTH OF 60,000 PSI AND PLACED IN THE UPPER HALF OF THE BASE WITH 1" MINIMUM CLEARANCE.

THE BOTTOM OF THE PRECAST CATCH BASIN MAY BE ROUNDED.

FOR DETAILS SHOWING FRAME AND GRATE, RING AND COVER SEE STANDARD PLAN "METAL FRAME AND GRATE FOR CATCH BASIN AND INLET" AND C.O.F. STANDARD DRAWING ST-8.

FOR DETAILS SHOWING LADDER, STEPS, HANDRAIL AND TOP SLAB SEE STANDARD PLAN "MISCELLANEOUS CATCH BASIN DETAILS".

FRAME AND GRATE MAY BE INSTALLED WITH FLANGE DOWN OR CAST INTO RISER.

CATCH BASIN TYPE II-48
ADAPTED FROM WDOT STANDARD PLAN B-1e
NOT TO SCALE

APPROVED

APR 24 2000
BY Kevin T. Spearing
CITY OF FERNDALE

RECORD DRAWING - 01/22/99

CORRELL PARK, P.U.D.
HOMESTEAD NORTHWEST, INC.
DETAIL SHEET

000319.016 2-10-06 KB

DAVID EVANS AND ASSOCIATES, INC.
119 GRAND AVENUE, SUITE D
BELLINGHAM, WA 98225-4400 (360) 647-7151

REVISIONS

14 OF 19 SHEETS

SCALE: AS NOTED DESIGN: CRP
DATE: 1-7-98 DRAWN: DVMA
FILE: HMNW0022/DTOOA.DWG CHECKED:

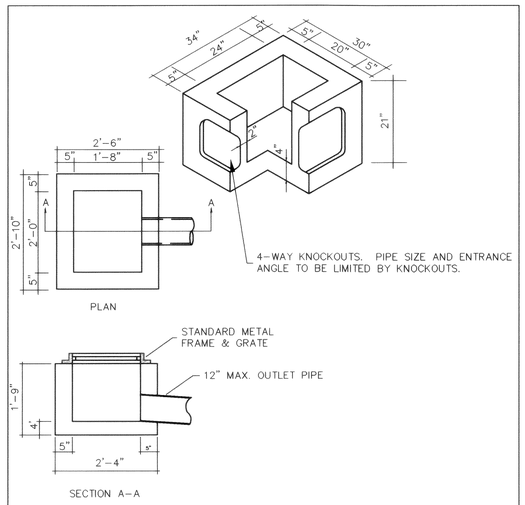

NOTES:
1) UNIT IS DESIGNED TO PICK UP SURFACE DRAINAGE A SHORT DISTANCE FROM CATCH BASIN.
2) CAST IN PLACE OR MASONRY CONSTRUCTION UNITS MAY BE SUBSTITUTED AS PER APWA STANDARDS OR STATE STANDARDS.
3) FOR DETAILS OF REINFORCEMENT OR INSTALLATION SEE APWA STANDARDS OR STATE STANDARDS.

NOT TO SCALE

APPROVED	CITY OF FERNDALE	DRAWING
Public Works Director Date	**INLET DETAIL**	**ST-7**

JUNE 1995

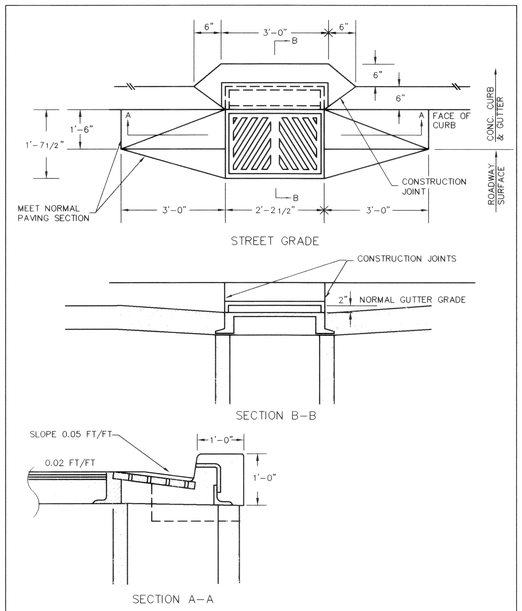

NOT TO SCALE

APPROVED	CITY OF FERNDALE	DRAWING
Public Works Director Date	**THRU-CURB INLET FRAME & GRATE WITH VERTICAL CURB INSTALLATION**	**ST-8**

JUNE 1995

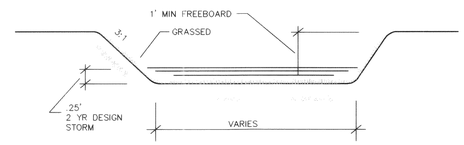

NOT TO SCALE

APPROVED	CITY OF FERNDALE	DRAWING
Public Works Director Date	**BIOFILTRATION SWALE DETAIL**	**ST-13**

JUNE 1995

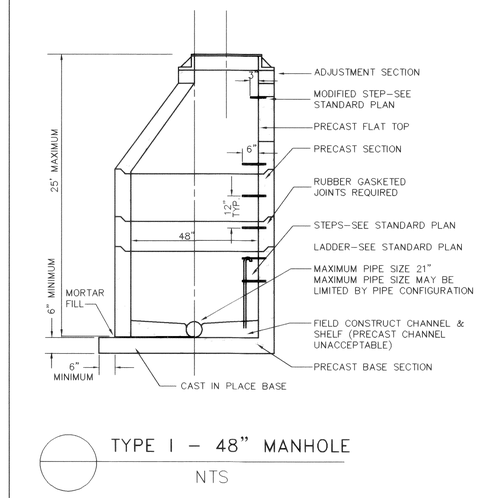

NOT TO SCALE

APPROVED	CITY OF FERNDALE	DRAWING
Public Works Director Date	**TYPE 1 48" MANHOLE**	**SS-2**

JANUARY 1993

2" SQUARE CONCRETE BLOCK TO ENCASE CLEAN-OUT. IN AREAS WHERE CLEAN-OUT OCCURS IN ASPHALT, THIS BLOCK IS TO BE LEFT APPROX. 1 1/2" LOW TO ALLOW FOR AN ASPHALT TOPPING OF LIKE MIXTURE AS THE SURROUNDING AREA. IF CLEAN-OUT OCCURS IN CONCRETE OR IN SOME TYPE OF SOIL, THE BLOCK IS TO BE MADE THE FULL 1' DEPTH AND FLUSH WITH THE SURROUNDING SURFACE.

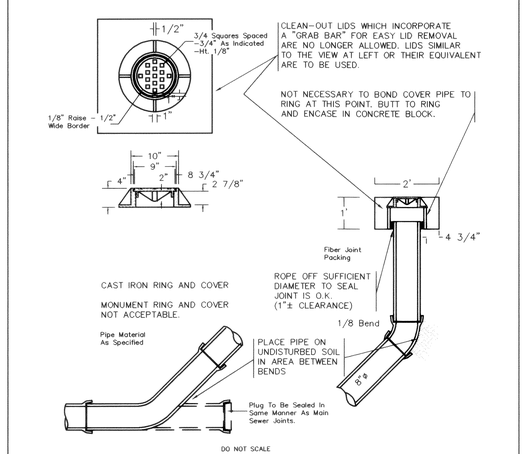

SSCO 04/30/92 16:17

NOT TO SCALE

APPROVED	CITY OF FERNDALE	DRAWING
Public Works Director Date	**8" CLEAN OUT**	**SS-5**

JANUARY 1993

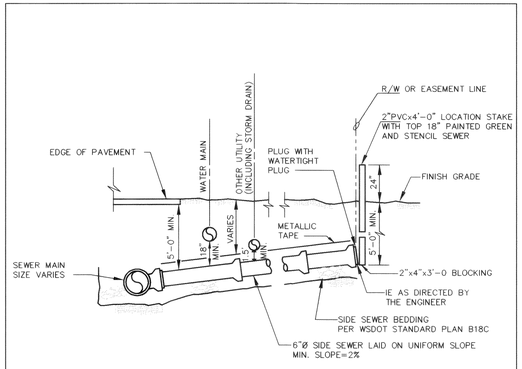

NORMAL INSTALLATION SIDE SEWER
15" AND SMALLER

NOT TO SCALE

APPROVED	CITY OF FERNDALE	DRAWING
Public Works Director Date	**NORMAL INSTALLATION 15" AND SMALLER SEWER MAINS**	**SS-6**

JUNE 1995

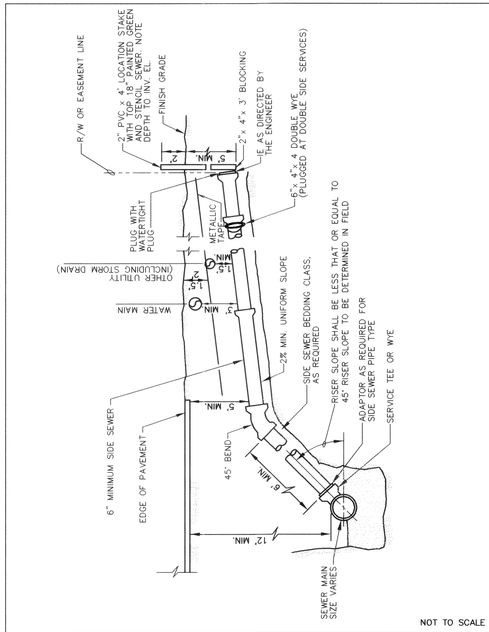

NOT TO SCALE

APPROVED	CITY OF FERNDALE	DRAWING
Public Works Director Date	**SANITARY SEWER SIDE SERVICE INSTALLATION DEEP MAINS**	**SS-8**

JUNE 1995

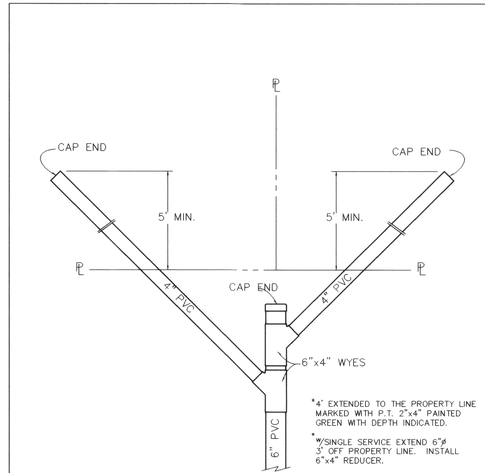

SEWER SERVICE DETAIL

NOT TO SCALE

APPROVED	CITY OF FERNDALE	DRAWING
Public Works Director Date	**DOUBLE SANITARY SEWER SERVICE**	**SS-13**

JUNE 1995

RECORD DRAWING - 01/22/99

CORRELL PARK, P.U.D.
HOMESTEAD NORTHWEST, INC.
DETAIL SHEET

00034.DIS 2-10-06 KR

DAVID EVANS AND ASSOCIATES, INC.
119 GRAND AVENUE, SUITE D
BELLINGHAM, WA 98225-4400 (360) 647-7151

REVISIONS

15 OF 19 SHEETS

SCALE: AS NOTED DESIGN: CRP
DATE: 1-7-98 DRAWN: DVM.A
FILE: HNWW0022/ DTOOA.DWG CHECKED:

APPROVED
APR 24 2000
BY _____
CITY OF FERNDALE

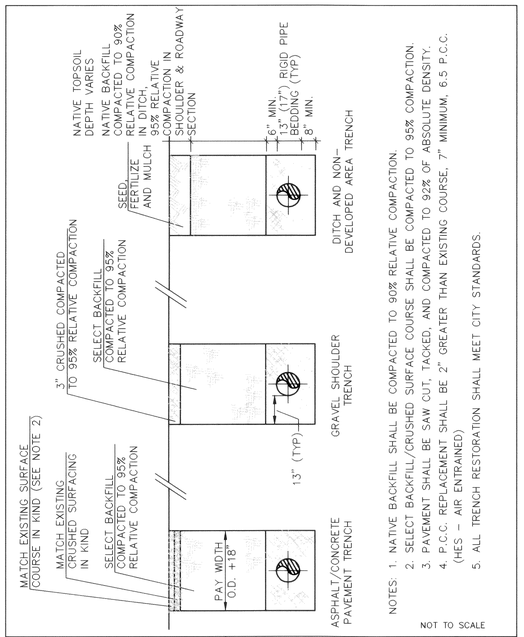

NOTES:
1. NATIVE BACKFILL SHALL BE COMPACTED TO 90% RELATIVE COMPACTION.
2. SELECT BACKFILL/CRUSHED SURFACE COURSE SHALL BE COMPACTED TO 95% COMPACTION.
3. PAVEMENT SHALL BE SAW CUT, TACKED, AND COMPACTED TO 92% OF ABSOLUTE DENSITY.
4. P.C.C. REPLACEMENT SHALL BE 2" GREATER THAN EXISTING COURSE, 7" MINIMUM, 6.5 P.C.C. (HES – AIR ENTRAINED)
5. ALL TRENCH RESTORATION SHALL MEET CITY STANDARDS.

NOT TO SCALE

APPROVED	CITY OF FERNDALE	DRAWING
Public Works Director Date	**TRENCHING DETAIL**	SS-15 W-11

JUNE 1995

NOTES
(1.) For close coupled hydrants use all flange type connections.
(2.) If hydrant rises through concrete use expansion strip around hydrant barrel.

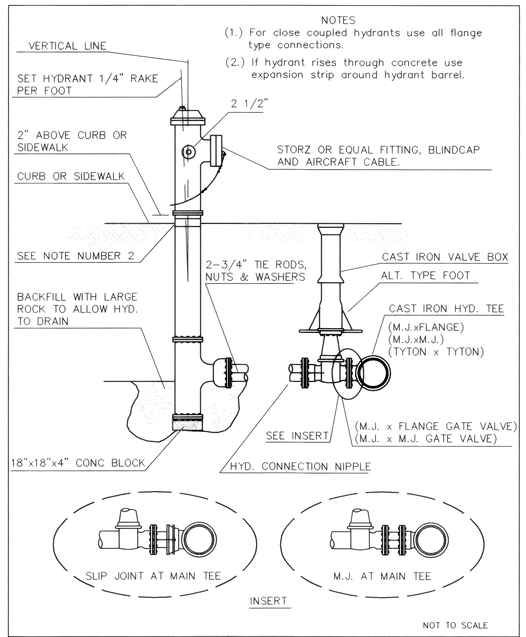

NOT TO SCALE

APPROVED	CITY OF FERNDALE	DRAWING
Public Works Director Date	**FIRE HYDRANT ASSEMBLY**	W-1

JUNE 1995

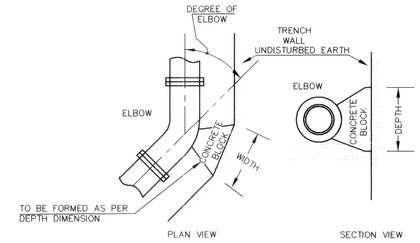

100 P.S.I. OPERATING PRESSURE

SIZE	11 1/4°		22 1/2°		45°		90°	
	W	D	W	D	W	D	W	D
6"	1'-0"	1'-0"	1'-0"	1'-0"	1'-6"	1'-6"	2'-3"	1'-6"
8"	1'-3"	1'-3"	1'-3"	1'-3"	1'-9"	1'-9"	3'-0"	2'-0"
10"	1'-9"	1'-6"	1'-9"	1'-6"	2'-3"	2'-3"	3'-6"	2'-6"
12"	2'-0"	1'-9"	2'-0"	1'-9"	2'-9"	2'-6"	4'-0"	3'-0"
16"	2'-9"	2'-3"	2'-9"	2'-3"	4'-0"	3'-0"	6'-3"	3'-6"
20"	3'-6"	2'-9"	3'-6"	2'-9"	4'-6"	4'-0"	8'-6"	4'-0"
24"	4'-6"	3'-0"	4'-6"	3'-0"	5'-6"	5'-0"	9'-9"	5'-0"

NOTE:
ALL ABOVE DIMENSIONS APPLY TO STABLE TRENCH WALLS, UNDER VARIBLE CONDITIONS SIZE OF THRUST BLOCK SHALL BE DETERMINED BY ENGINEER.

NOT TO SCALE

APPROVED	CITY OF FERNDALE	DRAWING
Public Works Director Date	**THRUST BLOCKING ELBOWS**	W-2

JUNE 1995

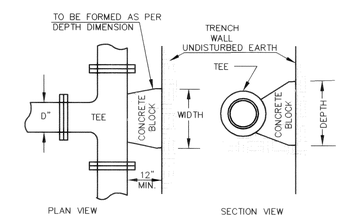

100 P.S.I. OPERATING PRESSURE

SIZE	WIDTH	DEPTH
6"	1'-6"	1'-6"
8"	2'-0"	2'-0"
10"	2'-6"	2'-6"
12"	3'-0"	3'-0"
16"	4'-6"	3'-6"
20"	6'-0"	4'-0"
24"	7'-0"	5'-0"

NOTE:
ALL ABOVE DIMENSIONS APPLY TO STABLE TRENCH WALLS, UNDER VARIBLE CONDITIONS SIZE OF THRUST BLOCK SHALL BE DETERMINED BY ENGINEER.

NOT TO SCALE

APPROVED	CITY OF FERNDALE	DRAWING
Public Works Director Date	**THRUST BLOCKING TEES**	W-3

JUNE 1995

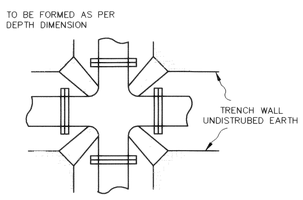

100 P.S.I. OPERATING PRESSURE

SIZE	WIDTH	DEPTH
6"	1'-0"	1'-0"
8"	1'-3"	1'-3"
10"	1'-6"	1'-6"
12"	1'-9"	1'-9"
16"	2'-3"	2'-6"
20"	2'-6"	3'-6"
24"	3'-0"	4'-0"

NOTE:
ALL ABOVE DIMENSIONS APPLY TO STABLE TRENCH WALLS, UNDER VARIBLE CONDITIONS SIZE OF THRUST BLOCK SHALL BE DETERMINED BY ENGINEER.

NOT TO SCALE

APPROVED	CITY OF FERNDALE	DRAWING
Public Works Director Date	**THRUST BLOCKING 4-WAY INTERSECTION**	W-4

JUNE 1995

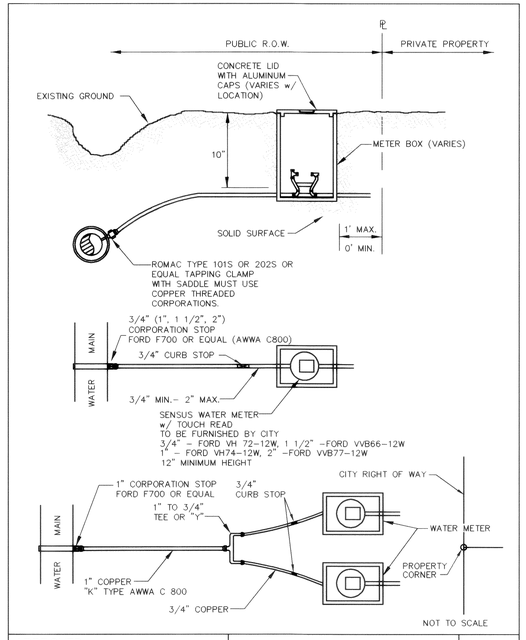

NOT TO SCALE

APPROVED	CITY OF FERNDALE	DRAWING
Public Works Director Date	**TYPICAL WATER SERVICE (3/4" TO 2")**	W-5

JUNE 1995

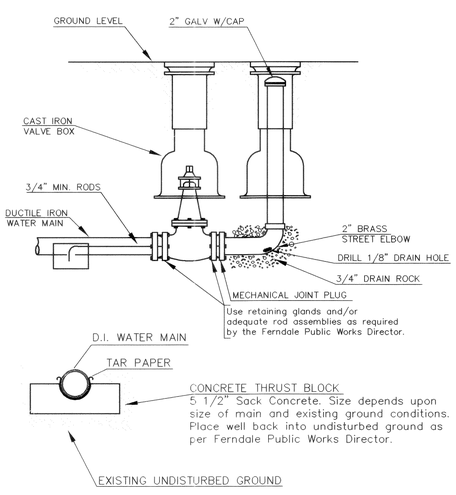

2" blow-off, non-extendable main to be used where mains will not be extended. For mains with future extension, refer to 2" blow-off.

NOT TO SCALE

APPROVED	CITY OF FERNDALE	DRAWING
Public Works Director Date	**2" BLOW-OFF NON-EXTENDABLE MAIN**	W-10 (MODIFIED)

JUNE 1995

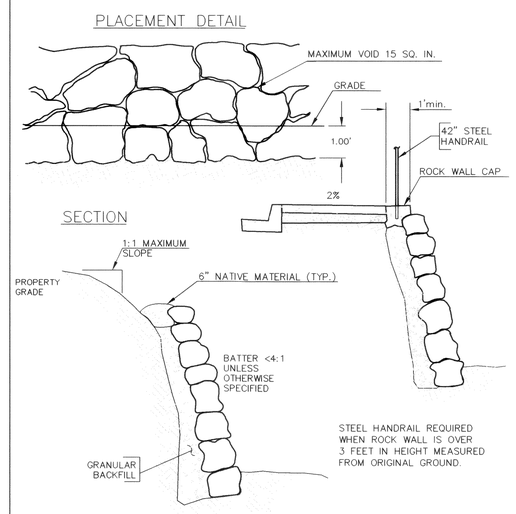

STEEL HANDRAIL REQUIRED WHEN ROCK WALL IS OVER 3 FEET IN HEIGHT MEASURED FROM ORIGINAL GROUND.

SEE SPECIFICATIONS FOR SIZE & TYPE OF ROCKS; WHERE HEIGHT EXCEEDS 8' THE ROCKERY SHALL BE 2 ROCKS (4') THICK, EXCEPT FOR THE 6', WHICH REMAIN AS SHOWN.

NOT TO SCALE

APPROVED	CITY OF FERNDALE	DRAWING
Public Works Director Date	**ROCK WALLS**	R-18

JUNE 1995

RECORD DRAWING - 01/22/99

CORRELL PARK, P.U.D.
HOMESTEAD NORTHWEST, INC.
DETAIL SHEET

00029/.010 2.10.00 KP

DAVID EVANS AND ASSOCIATES, INC.
119 GRAND AVENUE, SUITE D
BELLINGHAM, WA 98225-4400 (360) 647-7151

REVISIONS

16 OF 19 SHEETS

SCALE: AS NOTED DESIGN: CRP
DATE: 1-7-98 DRAWN: DVMA
FILE: HNNW0022/DTOOA.DWG CHECKED:

APPROVED
APR 24 2000
BY Karen T. Spaan
CITY OF FERNDALE

PROPER PLACEMENT OF A STRAW BALE BARRIER IN A DRAINAGE WAY

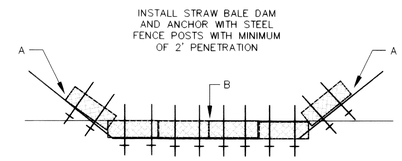

POINTS A SHOULD BE HIGHER THAN POINT B.

PROPER INSTALLATION OF A STRAW BALE BARRIER

1. EXCAVATE A TRENCH PERPENDICULAR TO THE DIRECTION OF DRAINAGE. THE TRENCH SHOULD BE EXCAVATED THE WIDTH OF A STRAW BALE AND A MINIMUM OF 4" DEEP.
2. PLACE AND STAKE STRAW BALES IN THE TRENCH.
3. WEDGE LOOSE STRAW BETWEEN THE BALES.
4. BACKFILL AND COMPACT THE EXCAVATED SOIL AGAINST THE STRAW BALE BARRIER.

RECORD DRAWING - 01/22/99

NOT TO SCALE

APPROVED	CITY OF FERNDALE	DRAWING
Public Works Director / Date	**STRAW BALE DAM DETAIL**	**ST-11**

JUNE 1995

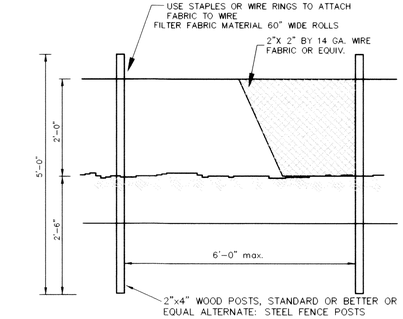

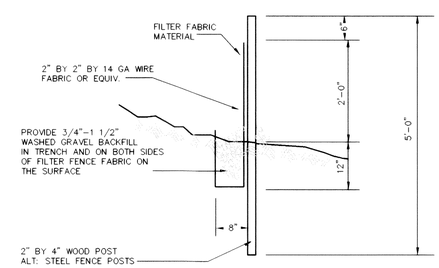

NOT TO SCALE

APPROVED	CITY OF FERNDALE	DRAWING
Public Works Director / Date	**SILT FENCE DETAIL**	**ST-10**

JUNE 1995

CORRELL PARK, P.U.D.
HOMESTEAD NORTHWEST
EROSION CONTROL PLAN

00034.017 2-10-00

DAVID EVANS AND ASSOCIATES, INC.
119 GRAND AVENUE, SUITE D
BELLINGHAM, WA 98225-4400 (360) 647-7151

REVISIONS

17 OF 19 SHEETS

SCALE: 1" = 60'
DESIGN: CRP
DATE: 1-7-98
DRAWN: DVMA
FILE: HMNW0022\EC17A.DWG
CHECKED:

APPROVED
APR 24 2000
BY
CITY OF FERNDALE

P:\PV\HMNW0022\EC17a.dwg Fri Jan 22 15:48:03 1999 DAVID EVANS AND ASSOCIATES - GLLA

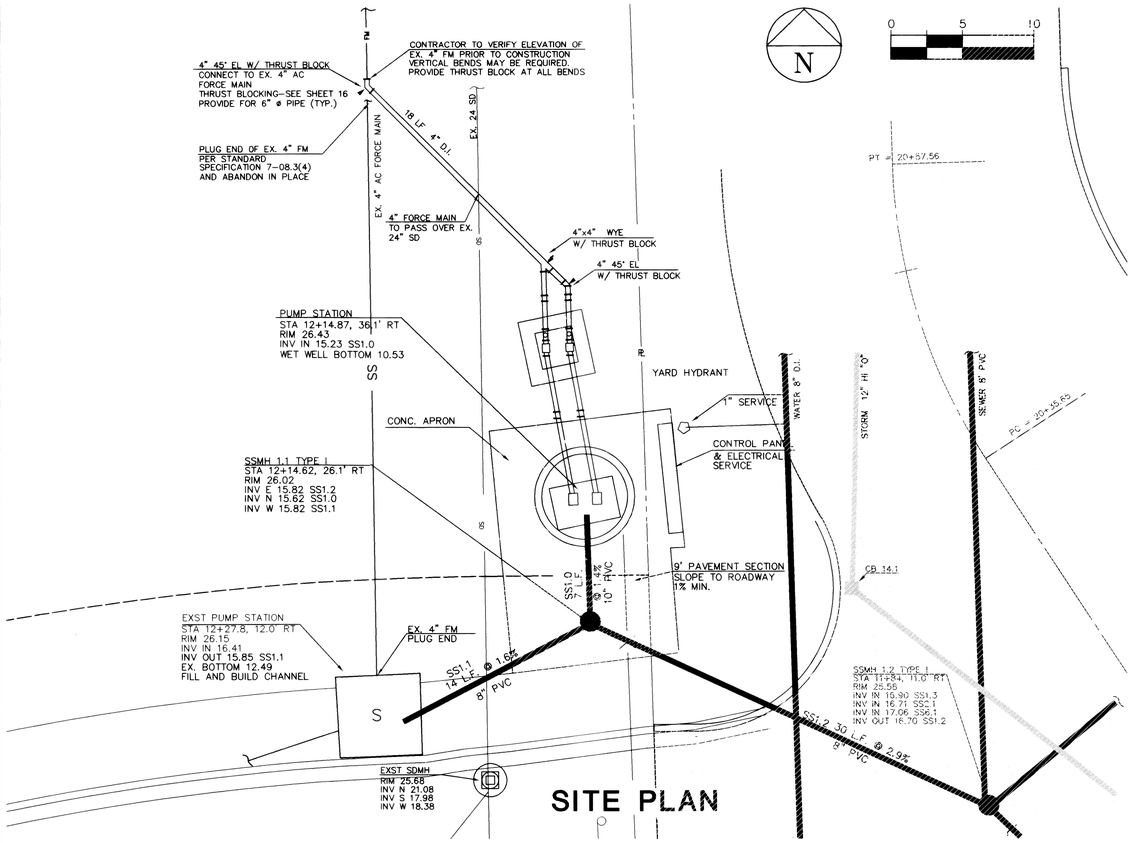

SITE PLAN

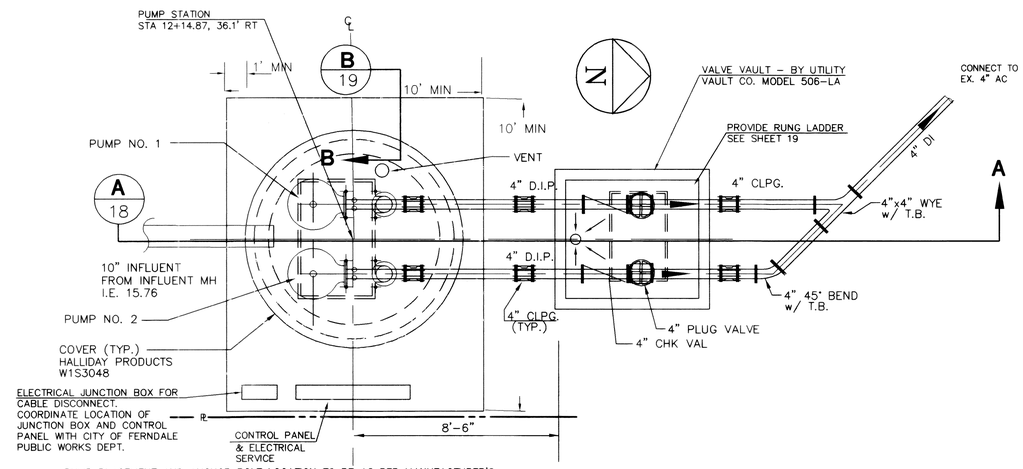

PUMP PLACEMENT AND ANCHOR BOLT LOCATION TO BE AS PER MANUFACTURER'S SPECIFICATIONS OF FLYGT PUMP, MODEL CP-3127.

PLAN

N.T.S.

PUMP STATION DESIGN DATA

PUMP STATION

STATION LOCATION	FLAIR/CORRELL PARK
TYPE	DUPLEX SUBMERSIBLE w/ EXPLOSION PROOF PUMPS
PUMP TYPE	FLYGT MODEL CP-3127 IMPELLER 484HT
CAPACITY	240 G.P.M. AT 56 Ft. T.D.H.
PUMP Hp	7.6 Hp
MOTOR DATA	230 VOLT, 1 PHASE, 60 CYCLES, 1,730 RPM
PUMP CYCLE:	15 EVENLY SPACED STARTS PER HOUR (PUMP OFF - 4 MIN. BEFORE RESTART)
AVERAGE DESIGN FLOW (ADF):	TOTAL - 57.6 GPM FLAIR - 24.3 GPM CORREL PARK - 33.3 GPM
PEAK DAILY FLOW:	@3.5 x ADF = 202 GPM
WETWELL	72"ø PRECAST CONCRETE
WETWELL VOLUME	211 GALS./FT.
STORAGE CAPACITY BEFORE PUMP ON	808 GAL

FORCE MAIN

LENGTH, TYPE	995 L.F. TOTAL 35 LF. 4" D.I. NEW, 960 L.F. 4" AC EXISTING
PROFILE	CONTINUOUSLY ASCENDING TO DISCHARGE MANHOLE.
DISCHARGE MANHOLE	INTERSECTION OF MAIN STREET AND WASHINGTON STREET, INVERT ELEV. 36.90

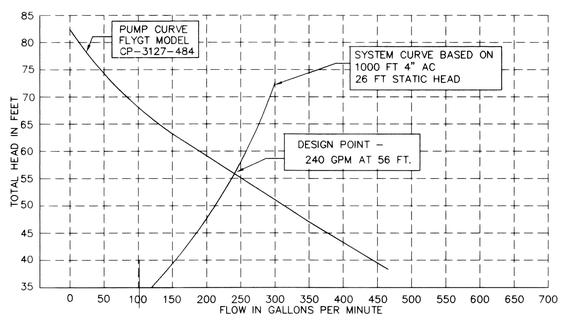

SYSTEM CURVE

DESIGN DATA

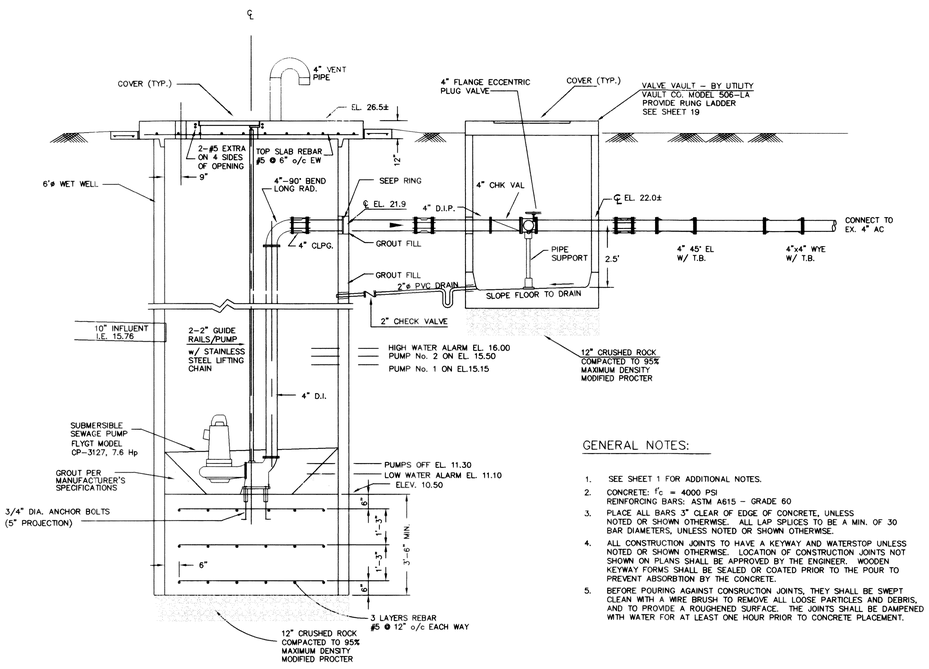

SECTION A-A

SCALE: N.T.S.

GENERAL NOTES:

1. SEE SHEET 1 FOR ADDITIONAL NOTES.
2. CONCRETE: $f'c$ = 4000 PSI
   REINFORCING BARS: ASTM A615 - GRADE 60
3. PLACE ALL BARS 3" CLEAR OF EDGE OF CONCRETE, UNLESS NOTED OR SHOWN OTHERWISE. ALL LAP SPLICES TO BE A MIN. OF 30 BAR DIAMETERS, UNLESS NOTED OR SHOWN OTHERWISE.
4. ALL CONSTRUCTION JOINTS TO HAVE A KEYWAY AND WATERSTOP UNLESS NOTED OR SHOWN OTHERWISE. LOCATION OF CONSTRUCTION JOINTS NOT SHOWN ON PLANS SHALL BE APPROVED BY THE ENGINEER. WOODEN KEYWAY FORMS SHALL BE SEALED OR COATED PRIOR TO THE POUR TO PREVENT ABSORBTION BY THE CONCRETE.
5. BEFORE POURING AGAINST CONSRUCTION JOINTS, THEY SHALL BE SWEPT CLEAN WITH A WIRE BRUSH TO REMOVE ALL LOOSE PARTICLES AND DEBRIS, AND TO PROVIDE A ROUGHENED SURFACE. THE JOINTS SHALL BE DAMPENED WITH WATER FOR AT LEAST ONE HOUR PRIOR TO CONCRETE PLACEMENT.

APPROVED
APR 24 2000
BY
CITY OF FERNDALE

RECORD DRAWING - 01/22/99

CORRELL PARK, P.U.D.

PUMP STATION
SITE PLAN & DETAILS

00021.018 2-10-00 KR

DAVID EVANS AND ASSOCIATES, INC.
119 GRAND AVENUE, SUITE D
BELLINGHAM, WA 98225-4400 (360) 647-7151

REGISTERED PROFESSIONAL ENGINEER
STATE OF WASHINGTON
KEVIN L. SCOTT
EXPIRES 7/14/99

REVISIONS

SHEET 18 OF 19

SCALE: AS NOTED | DESIGN: MJDI
DATE: 04/17/98 | DRAWN: KLS
FILE: HMNW0022/RDPS00A | CHECKED:

LIFT STATION

Mechanical Service Requirements:

1) Piping within pump station shall have flanged connections.

2) Guide rails shall be schedule 40 stainless steel. Cable hangers, anchor bolts, and hardware shall be stainless steel.

3) All hatches shall be provided with locks keyed to City of Ferndale system. Hatch is not designed for H-20 loading.

4) All pumping equipment and controls from the existing pump station shall be removed and turned over to the City of Ferndale Public Works Dept.

5) Three copies of the operation and maintenance manuals shall be provided to the city.

Electrical Service Requirements:

1) All electrical and control component information and specifications shall be reviewed and approved by the City of Ferndale, Public Works Dept. prior to installation.

2) Electrical panels shall be provided with locks keyed to City of Ferndale system.

3) Three copies of the operation and maintenance manuals shall be provided to the city.

4) An exterior light shall be provided on the control panel support structure to provide illumination for control panel and pump station area.

Power Supply

Single phase 240V power to pump station shall be provided by Puget Sound Energy. Contractor shall provide a 200 Amp. meter socket to be mounted along side panel.

Relay-Logic Control Panel Specification:

Electrical controls and panel (excluding the telemetry package) to be provided by ITT Flygt and/or their representative.

Panel shall be designed for a duplex, automatic pump control center with a NEMA 4X, Hoffman stainless steel enclosure. Panel to be designed for two ITT FLYGT CP-3217-484 pumps and shall be designed and manufactured for submersible pump applications. The control center shall be designed for single phase 220 volts. The control panel shall incorporate one ITT Flygt single-phase module for each pump.

The panel will be UL 913, for sanitary sewer application.

A self-protecting circuit breaker combination integrated starter shall be supplied for each pump. The integrated starter shall consist of a magnetic circuit breaker with door interlocking handle, a self-protected magnetic contactor, and a Class 10 type adjustable bi-metallic ambient compensated thermal overload relay.

A control power transformer shall provide 120 volts for the external level sensing circuits (if required) and other pilot circuitry. Fuse or circuit breaker shall protect the primary and secondary of the control power transformer. The panel will incorporate a separate motor thermal protection circuit for each pump motor. The circuit shall be manually reset after a stator thermal overload but automatically reset after a power failure.

All control relay components shall be mounted on DIN rails. Terminals shall be provided for all incoming and outgoing circuits, except for motor load cables, which may be connected directly to the overload relay terminals. All wires in the control panel shall be color coded by voltage. Power supply wires shall be isolated from the control wires. Control wiring shall be run in wire channels and not simply tied together. A nameplate shall be permanently affixed to the inside of the control enclosure. The nameplate shall have a stamped or engraved serial number and shall also identify the motor horsepower and amperage of the pumps.

Telemetry

Telemetry will not be provided by ITT Flygt.
Pump station telemetry equipment shall be installed inside the electrical panel. Telemetry shall be in accordance with the City of Ferndale, Public Works Department requirements and standards. The telemetry equipment shall be sent to ITT Flygt prior to completion of panel construction for incorporation into the panel box. If equipment cannot be sent prior to the completion of the panel box, the telemetry supplier must provide ITT Flygt with space and connection requirements necessary for ITT Flygt to reserve a portion of the panel box for the telemetry equipment.

Telemetry should provide notification of:

- Panel intrusion
- High wet well
- Low wet well
- Power failure
- Pump seal failure
- Signal loss

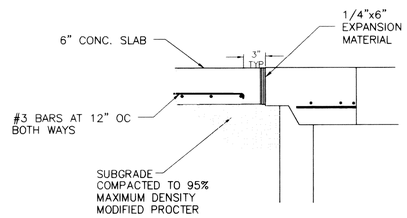

SECTION B-B

N.T.S.

The control panel shall include the following functions:

1) An electronic alternator providing automatic alteration of the pumps under normal operating conditions and allowing both pumps to operate simultaneously if there are high inflow conditions.

2) Hand-Off-Auto (H-O-A) selector switches for each pump.

3) Run lights. Lights to show that a pump is running, pump failure, and "high water" in lift station shall be included in the station.

4) A "high water" alarm will be provided, with capability for being disabled.

5) Auxiliary contacts for telemetry (telemetry by others).

6) Elapsed time (hour) meters.

7) Five (5) intrinsically safe floats, (low water alarm, pump off, lead pump on, lag pump on, and high water alarm), including an intrinsically safe barrier device. A conductance actuated level control may be supplied instead of floats.

8) "High water" dome light mounted at the bottom of the panel.

9) Inner door.

10) Wire diagrams.

11) Convenience oulet (15 amp)

12) Manual or automatic transfer switch with a generator receptacle matching City of Ferndale equipment.

13) Anti-condensation heaters

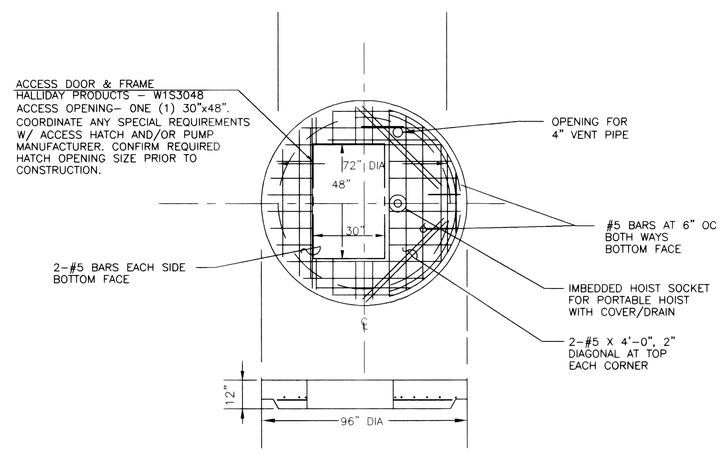

TOP SLAB SECTION

APPROVED

APR 24 2000

BY _____
CITY OF FERNDALE

RECORD DRAWING - 01/22/99

CORRELL PARK, P.U.D.
PUMP STATION
DETAILS

000241.019 2-10-04

DAVID EVANS AND ASSOCIATES, INC.
119 GRAND AVENUE, SUITE D
BELLINGHAM, WA 98225-4400 (360) 647-7181

REVISIONS

19 OF 19 SHEETS

SCALE: AS NOTED | DESIGN: MJDI
DATE: 04/17/98 | DRAWN: KLS
FILE: HMNW0022/RDPS00A | CHECKED: