Town of FERNDALE, WASHINGTON

SEWAGE SYSTEM IMPROVEMENTS

AXTON ROAD INTERCEPTOR

SCHEDULES I & II

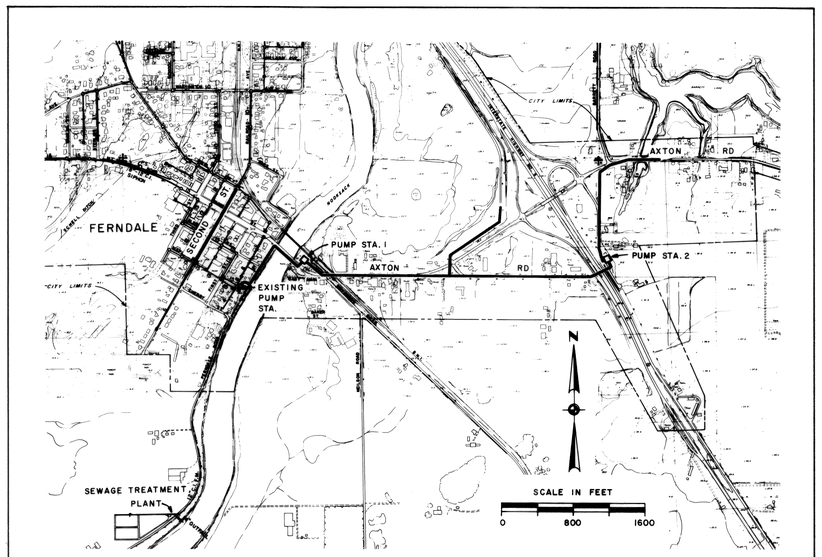

VICINITY MAP

INDEX TO DRAWINGS

Stevens, Thompson & Runyan, Inc.

Engineers / Planners

PORTLAND · SEATTLE · BOISE · ANCHORAGE

GENERAL NOTES

1. ALL ELEVATIONS REFER TO MEAN SEA LEVEL.

2. DETAIL OR SECTION NUMBERING SYSTEM:

   SEE SECT (1 / A2)
   - 1 — DETAIL OR SECTION NUMBER.
   - A2 — SHEET NUMBER ON WHICH DETAIL OR SECTION NUMBER APPEARS.

   SECTION (1 / A1) EXTERIOR WALL
   - 1 — DETAIL OR SECTION NUMBER.
   - A1 — SHEET NUMBER ON WHICH DETAIL OR SECTION WAS TAKEN.

SCHEDULE II

1. ALL SEWER LINE DIMENSIONS ARE HORIZONTAL DISTANCES.

2. ALL TRENCHING, BEDDING, BACKFILL AND SURFACE RESTORATION SHALL BE IN ACCORDANCE WITH DETAILS — (3 / U7) AND (4 / U7) UNLESS OTHERWISE NOTED.

3. ALL MANHOLES SHALL BE IN ACCORDANCE WITH DETAILS — (1 / U7) (2 / U7) (5 / U7) (6 / U7) AND (4 / U8) UNLESS OTHERWISE NOTED.

4. WHERE STUBS IN MH'S ARE INDICATED ON THE PLANS THEY SHALL BE IN ACCORDANCE WITH DETAIL (8 / U7)

5. REPLACE ALL PRIVATE SIDEWALKS, STEPS AND DRIVEWAYS TO MATCH EXISTING. (SEE SPECIFICATIONS).

6. LOCATIONS OF EXISTING UTILITIES ARE APPROXIMATE ONLY AND MAY NOT BE SHOWN. IT SHALL BE THE CONTRACTOR'S RESPONSIBILITY TO DETERMINE THE EXACT LOCATION OF ALL UTILITIES WITHIN THE CONSTRUCTION LIMITS.

7. INSTALL SIDE SEWERS TO EDGE OF RIGHT OF WAY IN LOCATIONS SHOWN ON PLANS. CONSTRUCT IN ACCORDANCE WITH DETAIL (1 / U8)

LEGEND

EXISTING		THIS CONTRACT
8"	SANITARY SEWER WITH SIZE & MANHOLE & SIDESEWER	18" / 6"
6"W	WATER LINE WITH SIZE & VALVE	
WM	WATER METER	
CB	CATCH BASIN	
	CATCH BASIN & STORM SEWER	
	CULVERT	
2"G	GAS LINE WITH SIZE & VALVE	
PP	POWER OR TELEPHONE POLE	
x x	FENCE	
	EXISTING ROAD SURFACE	
T T	UNDERGROUND TELEPHONE CABLE & MARKER	
	SURVEY POINTS (HUB & TACK OR PK NAIL)	
	DITCH & DRAINAGE	
	ROAD R/W	
	TEST BORING LOCATION	
28	EXISTING CONTOUR	
	FINISHED GRADE	ELEV. 33.0

DATE	NO.	REVISION	BY

DESIGNED T. S. | DRAWN E. J. | CHECKED | APPROVED | SCALE — | DATE JULY, 1972 | FILE 71-S-425.002

Stevens, Thompson & Runyan, Inc.
Engineers / Planners
PORTLAND SEATTLE BOISE

TOWN OF FERNDALE, WASHINGTON
AXTON ROAD INTERCEPTOR
SCHEDULE II

GENERAL NOTES & LEGEND

G1 / 5

NOTE:

1. PREDICTED 100 YR FLOOD ELEV 26.5
2. FOR LOCATION OF SCHEDULE II MANHOLES, FORCE MAIN & SEWER SEE SHT U1 & U5

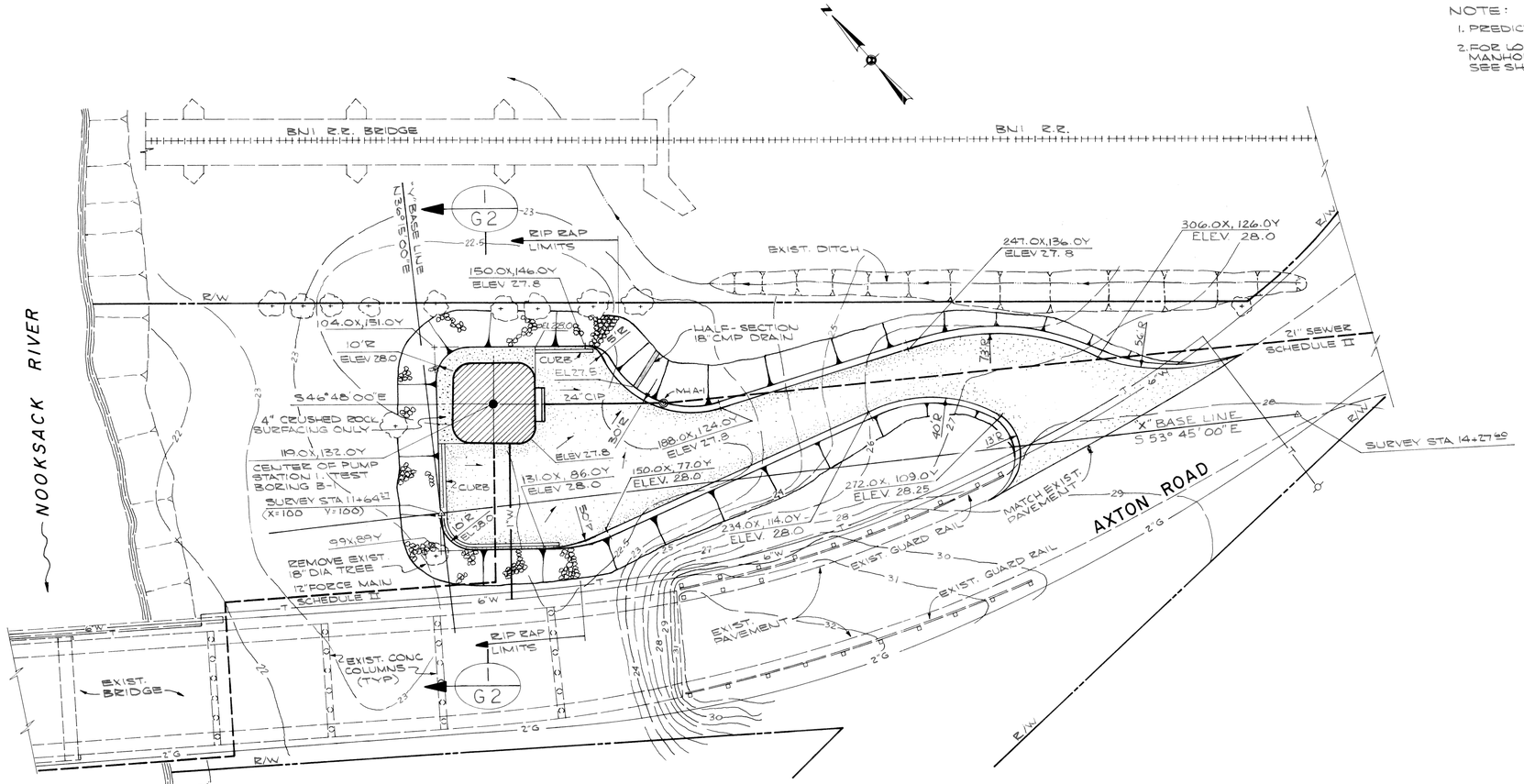

PUMP STATION I SITE PLAN

SCALE: 1"=20'

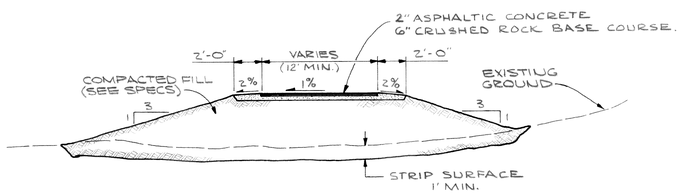

PUMP STATION I ACCESS ROAD

NO SCALE

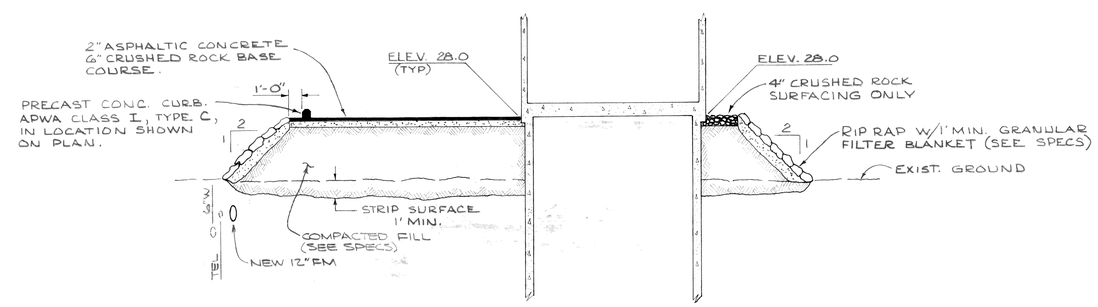

PUMP STATION I PARKING AREA (I / G2)

NO SCALE

GRAPHIC SCALE

0 5 10 20 40 60

1" = 20'

TED STRICKLIN STATE OF WASHINGTON 9683 REGISTERED PROFESSIONAL ENGINEER

DATE	NO.	REVISION	BY

DESIGNED T.S. | APPROVED Ted Strickln
DRAWN J.M.H. | SCALE AS SHOWN | DATE JULY, 1972
CHECKED JHG | FILE 71-S-425.002

Stevens, Thompson & Runyan, Inc.
Engineers/Planners
PORTLAND SEATTLE BOISE

TOWN OF FERNDALE, WASHINGTON
AXTON ROAD INTERCEPTOR
SCHEDULE I

PUMP STATION I
SITE PLAN

G2 / 5

MICROFILMED

SHANNON & CO.

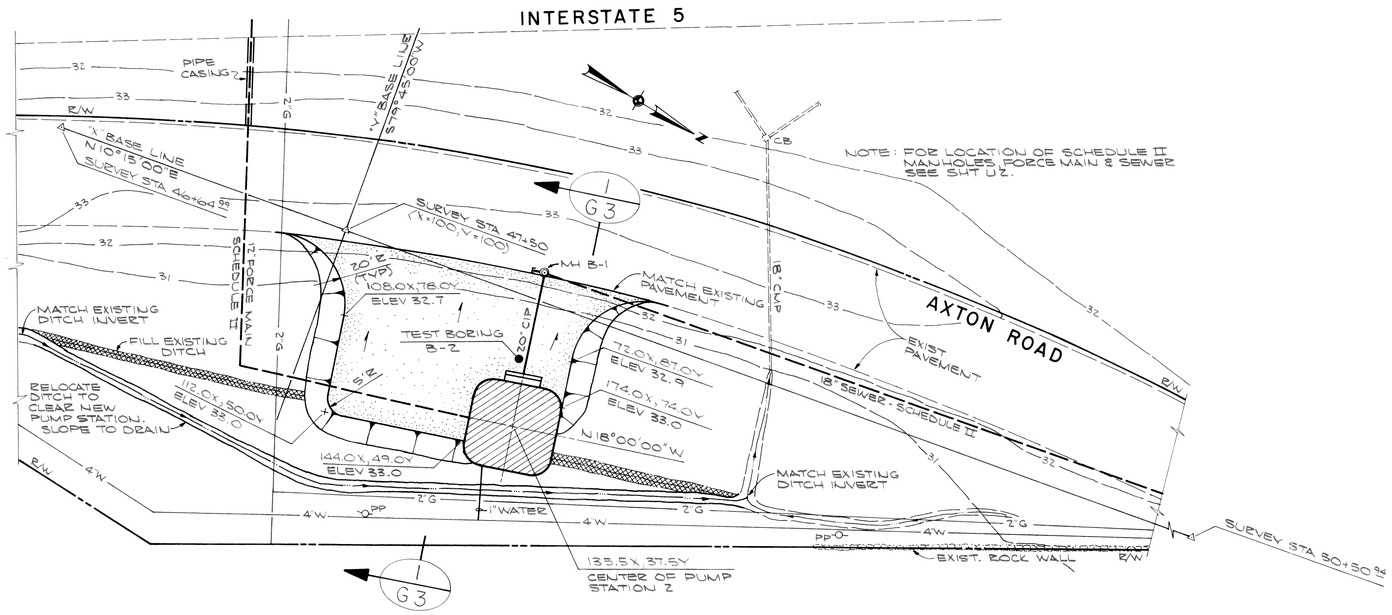

PUMP STATION 2 SITE PLAN

SCALE: 1"= 20'

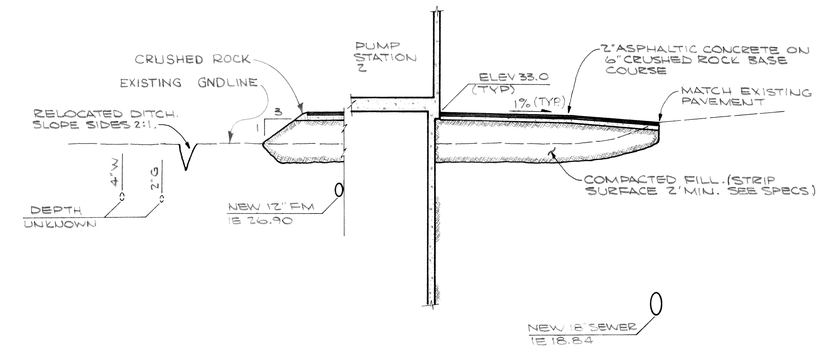

PUMP STATION 2 SITE SECTION 1/G3

NO SCALE

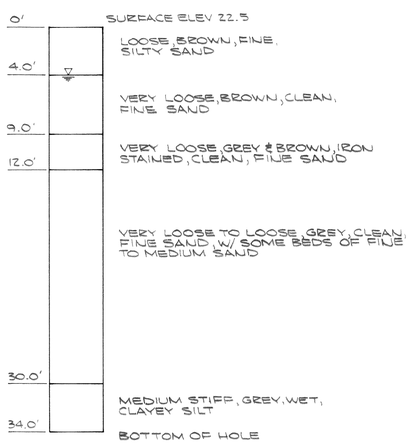

TEST BORING B-1

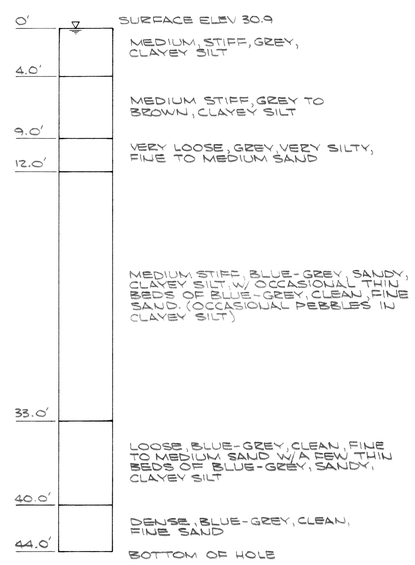

TEST BORING B-2

NOTE:

TEST HOLES HAVE BEEN BORED TO INDICATE SUBSURFACE MATERIALS AT PARTICULAR LOCATIONS AND ARE SHOWN ON THE PLANS. INVESTIGATIONS CONDUCTED OF SUBSURFACE CONDITIONS ARE FOR THE PURPOSE OF STUDY AND DESIGN, AND NEITHER THE TOWN OF FERNDALE NOR THE CONSULTANT ASSUMES ANY RESPONSIBILITY WHATEVER IN RESPECT TO THE SUFFICIENCY OR ACCURACY OF THE BORINGS THUS MADE, OR OF THE LOG OF TEST BORINGS, OR OF OTHER INVESTIGATIONS, OR OF THE INTERPRETATION MADE THEREOF; AND THERE IS NO WARRANTY OR GUARANTEE, EITHER EXPRESSED OR IMPLIED, THAT THE CONDITIONS INDICATED BY SUCH INVESTIGATIONS ARE REPRESENTATIVE OF THOSE EXISTING THROUGHOUT SUCH AREA, OR ANY PART THEREOF, OR THAT UNLOOKED FOR DEVELOPMENTS MAY OCCUR.

GRAPHIC SCALE

0 5 10 20 40 60

1"=20'-0"

FRED STRICKLIN — STATE OF WASHINGTON — 9683 — REGISTERED PROFESSIONAL ENGINEER

DATE	NO.	REVISION	BY

DESIGNED T.S. | APPROVED
DRAWN J.M.H. | SCALE AS SHOWN | DATE JULY, 1972
CHECKED | FILE 71-S-425.002

Stevens, Thompson & Runyan, Inc.
Engineers/Planners
PORTLAND SEATTLE BOISE

TOWN OF FERNDALE, WASHINGTON
AXTON ROAD INTERCEPTOR
SCHEDULE I

PUMP STATION 2
SITE PLAN

G3/5

MICROFILMED

SHANNON & CO.

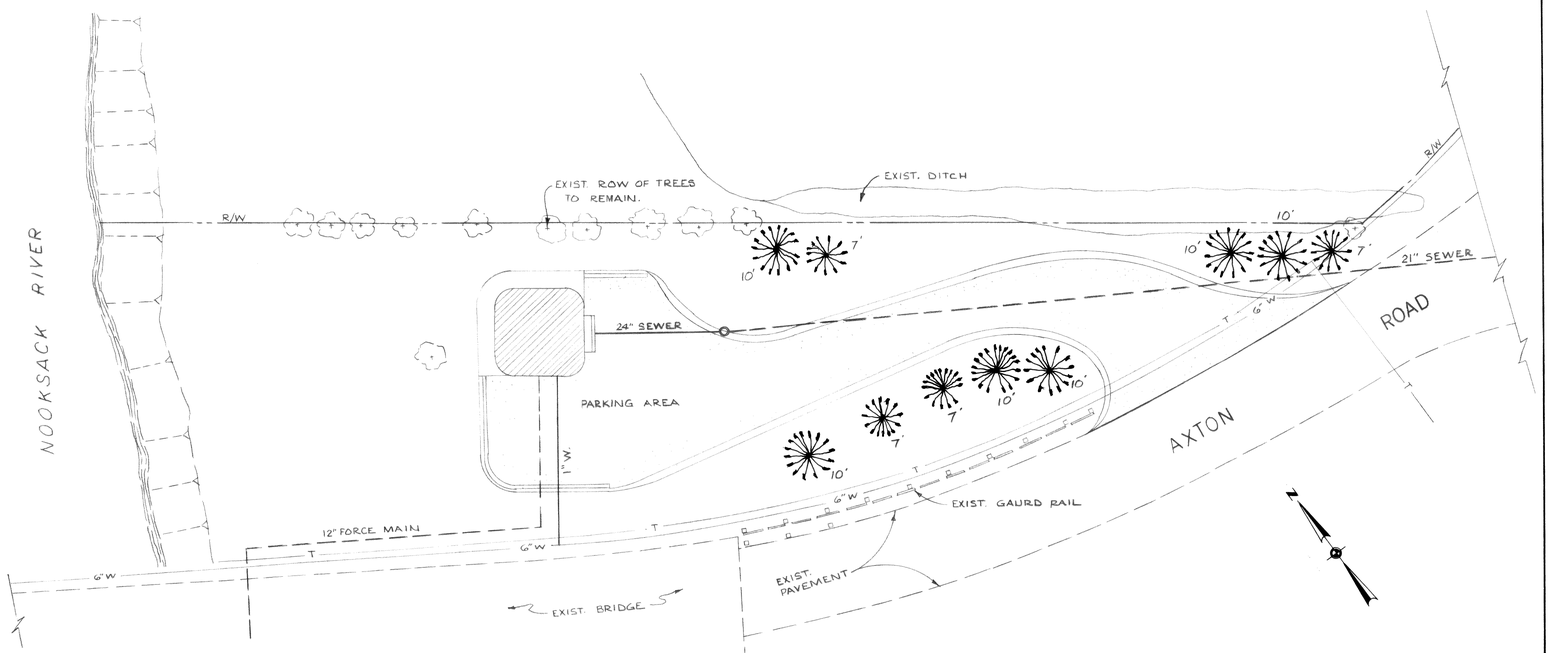

PUMP STATION 1

SCALE: 1" = 20'

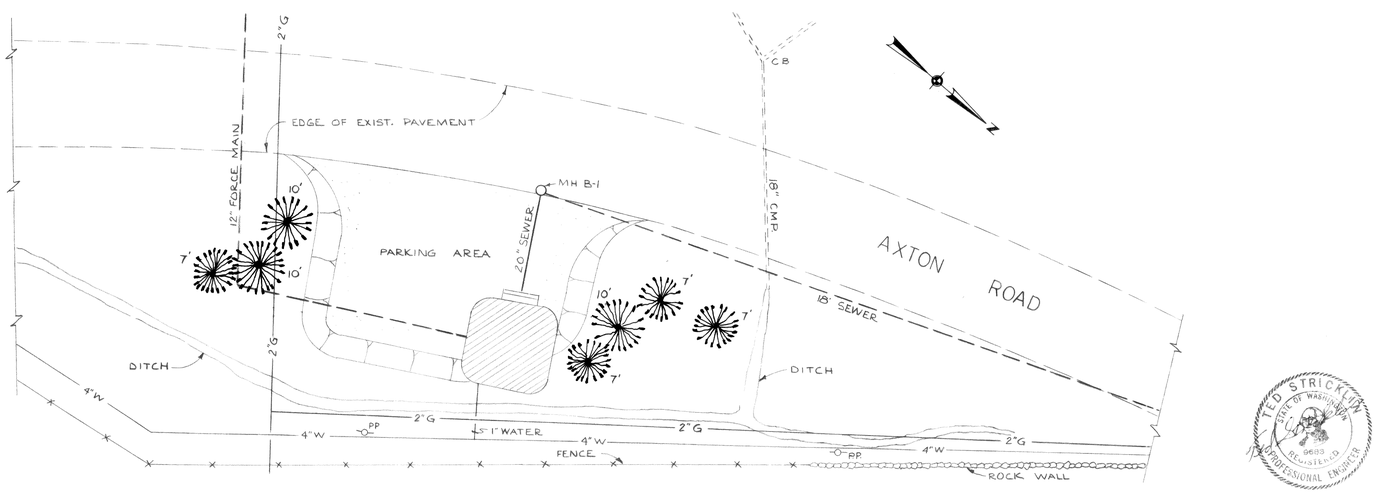

GRAPHIC SCALE

0 5 10 20 40

1" = 20'

PUMP STATION 2

SCALE: 1" = 20'

NOTES:

1. ALL SLOPE AREAS SHALL BE SEEDED WITH MIXTURE AS SPECIFIED. ALL "RAW" AREAS LEFT AS A RESULT OF CONSTRUCTION ACTIVITIES SHALL BE SEEDED WITH THE SPECIFIED SEED MIXTURE MINUS THE DOUGLAS FIR SEED INGREDIENT.
2. TREES ON THE PLANS ARE SHOWN IN THEIR APPROXIMATE LOCATIONS. STAKE LOCATIONS PRIOR TO PLANTING FOR APPROVAL BY THE ENGINEER. ADJUSTMENTS SHALL BE MADE IN THE FIELD AS NECESSARY.

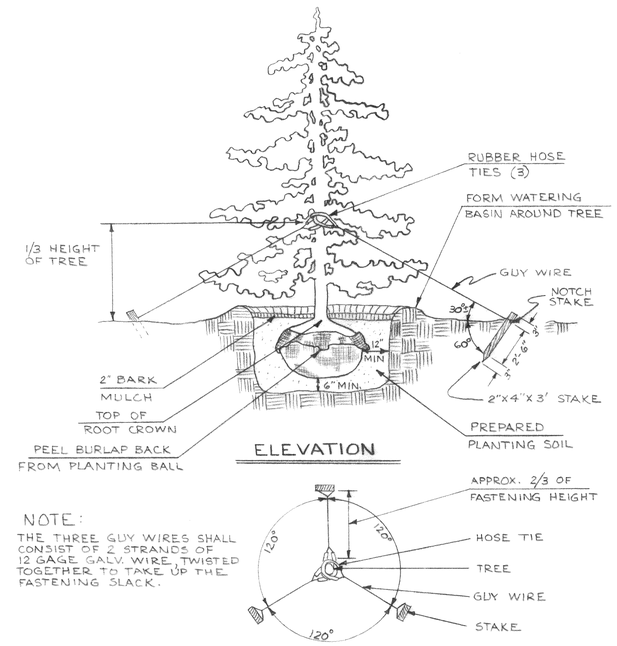

NOTE:

THE THREE GUY WIRES SHALL CONSIST OF 2 STRANDS OF 12 GAGE GALV. WIRE, TWISTED TOGETHER TO TAKE UP THE FASTENING SLACK.

EVERGREEN TREE PLANTING AND GUYING

PLANT MATERIAL

BOTANICAL NAME	COMMON NAME	QUANT.	SIZE	SPEC.	SPAC'G.
PSEUDOTSUGA MENZIESII	DOUGLAS FIR	8	10'	B&B	AS SHOWN
PSEUDOTSUGA MENZIESII	DOUGLAS FIR	9	7'	B&B	AS SHOWN

SEED MIXTURE

BOTANICAL NAME	COMMON NAME	% OF MIXTURE BY WEIGHT
FESTUCA RUBRA	RED FESCUE	40%
AGROSTIS TENNIS	COLONIAL BENTGRASS	5%
LOLIUM PERENE	PERNIAL RYE	35%
TRIFOLIUM REPENS	WHITE CLOVER	10%
PSEUDOTSUGA MENZIESII	DOUGLAS FIR	10%

TED STRICKLAND STATE OF WASHINGTON 9683 REGISTERED PROFESSIONAL ENGINEER

DATE	NO.	REVISION	BY

DESIGNED L.A.W.
DRAWN J.L.B.
CHECKED LAG
APPROVED Ted Strickland
SCALE AS SHOWN
DATE JULY, 1972
FILE 71- -425.002

Stevens, Thompson & Runyan, Inc.
Engineers / Planners
PORTLAND SEATTLE BOISE

TOWN OF FERNDALE, WASHINGTON
AXTON ROAD INTERCEPTOR
SCHEDULE I

PUMP STATION 1 & 2
LANDSCAPING PLAN

G4 / 5

MICROFILMED

BHANNON & CO.

NOTES:

1. Relocate Float Type Flow Transmitter From Distribution Structure To Chlorination Building. Locate Per Manufacturer's Requirements.
2. Recalibrate Transmitter and Flow Recorder.
3. Abandon Existing Cable From Flow Recorder To Distribution Structure
4. Thoroughly Clean Top Surface of Distribution Box. Apply Colma Fix Bonding Compound To Mating Surface Per Manufacturer's Requirements

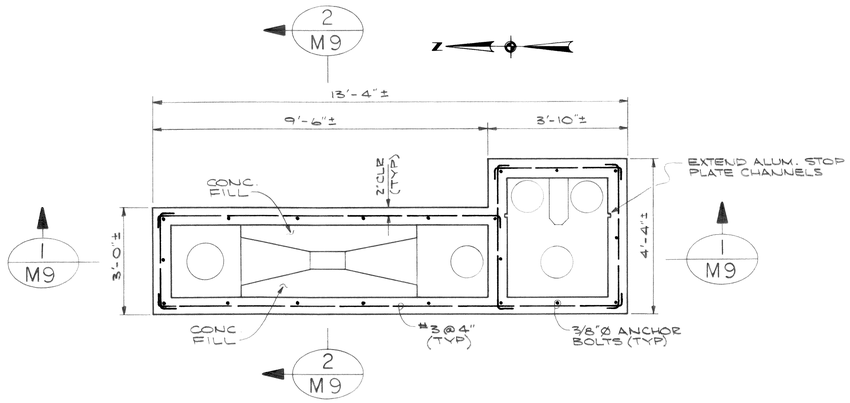

PLAN
EXISTING DISTRIBUTION STRUCTURE
SCALE: 1/2" = 1'-0"

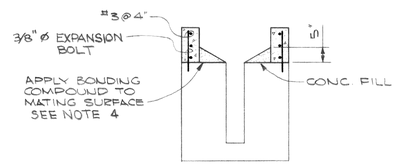

SECTION 2/M9
SCALE: 1/2" = 1'-0"

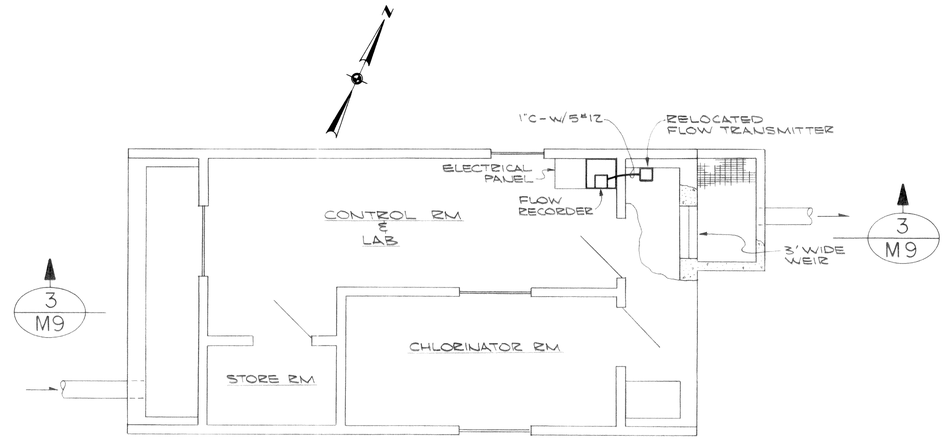

PLAN
EXISTING CHLORINATION BUILDING
SCALE: 1/4" = 1'-0"

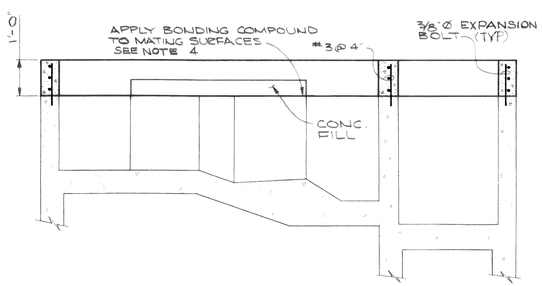

SECTION 1/M9
SCALE: 1/2" = 1'-0"

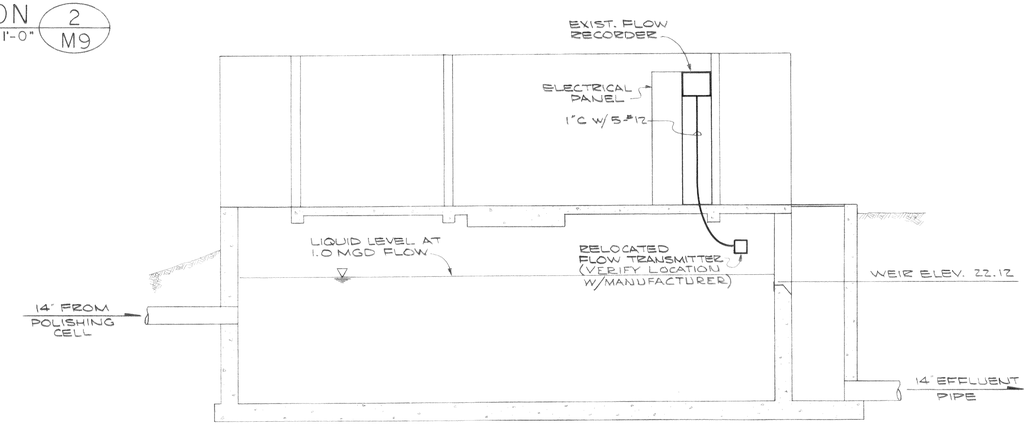

SECTION 3/M9
SCALE: 1/4" = 1'-0"

GRAPHIC SCALES

0 1 2 3 4 5 6 7 8 9 10 11 12
1/4" = 1'-0"

0 1/2 1 2
1/2" = 1'-0"

DATE	NO.	REVISION	BY

DESIGNED T.S. | DRAWN J.M.H. | CHECKED | APPROVED | SCALE AS SHOWN | DATE JULY, 1972 | FILE 71-S-425.002

Stevens, Thompson & Runyan, Inc.
Engineers / Planners
PORTLAND SEATTLE BOISE

TOWN OF FERNDALE, WASHINGTON
AXTON ROAD INTERCEPTOR
SCHEDULE I

EXISTING SEWAGE TREATMENT PLANT MODIFICATIONS

G5 / 5

MICROFILMED

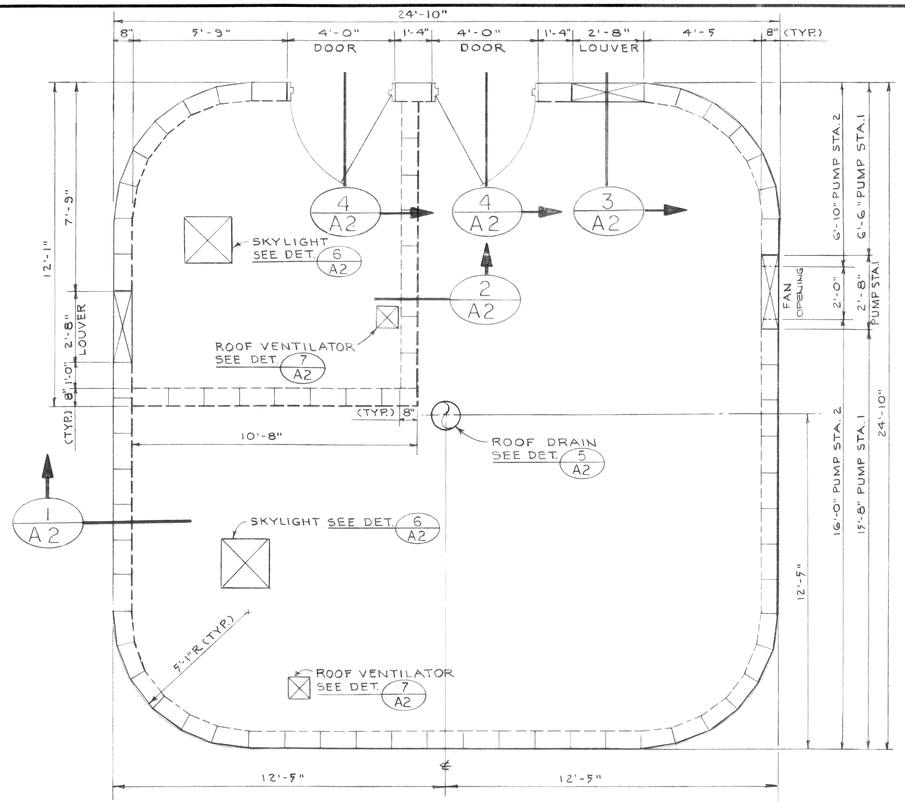

PLAN
PUMP STATION 1 & 2
SCALE: 3/8" = 1'-0"

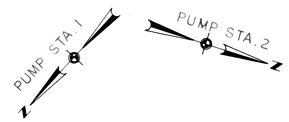

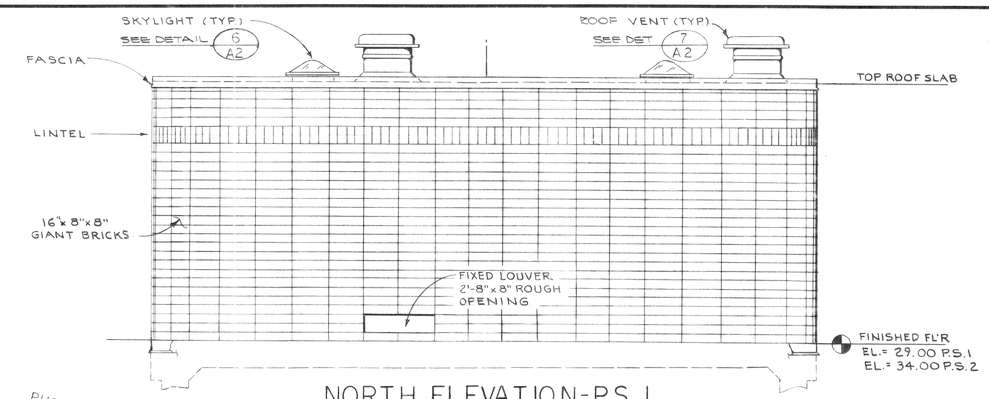

NORTH ELEVATION-P.S. 1
SOUTH ELEVATION-P.S.2
SCALE: 3/8" = 1'-0"

NOTE:
THIS DRAWING TYP. FOR STATIONS 1 AND 2 EXCEPT WHERE NOTED OTHERWISE.

EAST ELEVATION-P.S.1
WEST ELEVATION-P.S.2
SCALE: 3/8" = 1'-0"

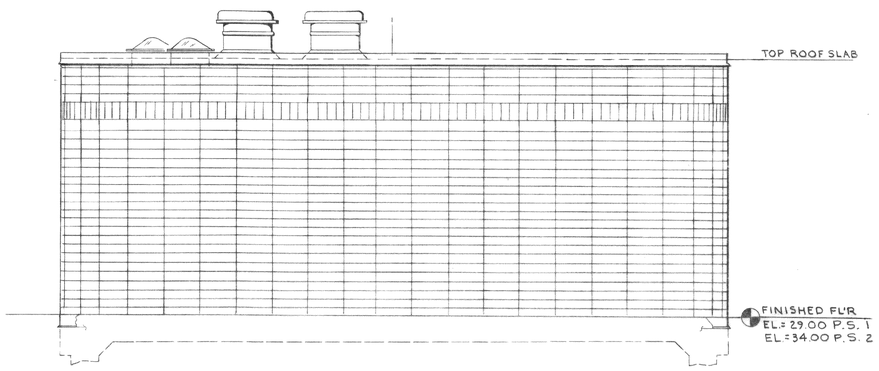

WEST ELEVATION P.S. 1
EAST ELEVATION P.S. 2
SCALE: 3/8" = 1'-0"

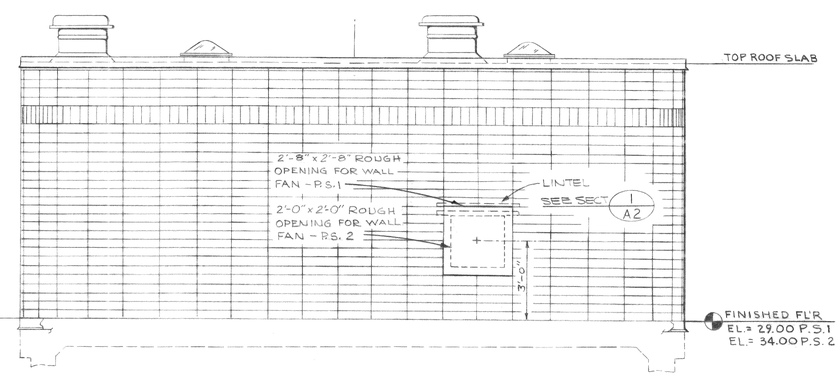

SOUTH ELEVATION-P.S.1
NORTH ELEVATION-P.S.2
SCALE: 3/8" = 1'-0"

GRAPHIC SCALE
0 1 2 3 4 5 6 7 8 9 10
3/8" = 1'-0"

RAMON D. OPSAHL
STATE OF WASHINGTON
REGISTERED
PROFESSIONAL ENGINEER

DATE	NO.	REVISION	BY

DESIGNED RDO
DRAWN E. J.
CHECKED
APPROVED
SCALE AS SHOWN
DATE JULY, 1972
FILE 71-S-425.002

Stevens, Thompson & Runyan, Inc.
Engineers/Planners
PORTLAND SEATTLE BOISE

TOWN OF FERNDALE, WASHINGTON
AXTON ROAD INTERCEPTOR
SCHEDULE I

PUMP STATION 1 & 2
ARCHITECTURAL PLAN & ELEVATIONS

A1 / 2

MICROFILMED

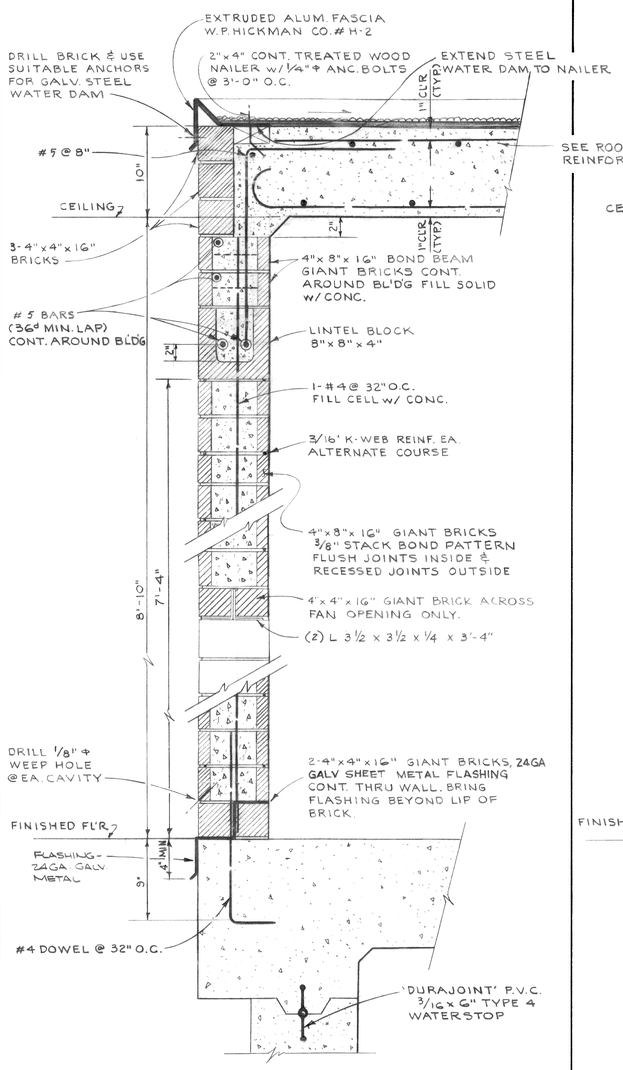

SECTION 1 / A1
EXTERIOR WALL
SCALE 1 1/2" = 1'-0"

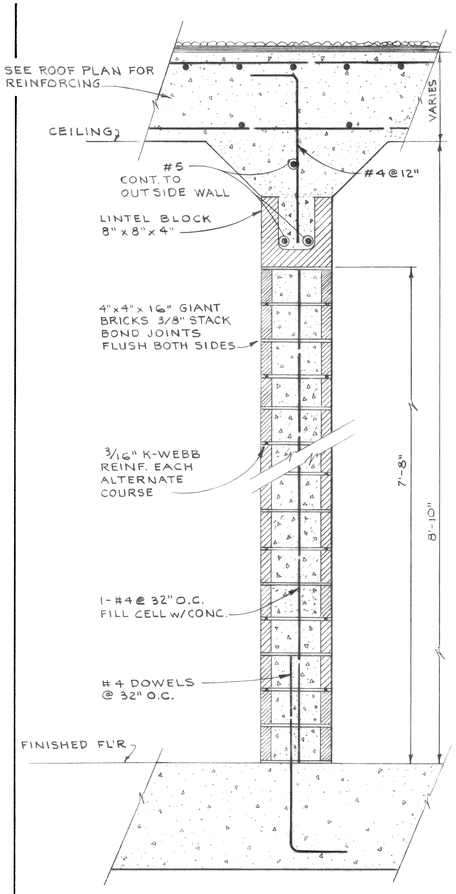

SECTION 2 / A1
INTERIOR WALL
SCALE: 1 1/2" = 1'-0"

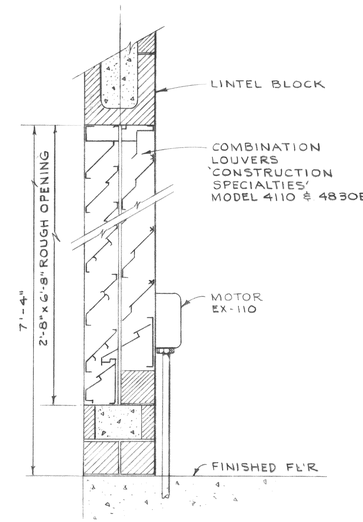

SECTION 3 / A1
AIR INTAKE LOUVER
SCALE 3" = 1'-0"

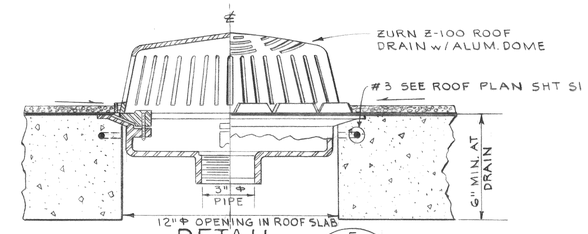

DETAIL 5 / A1
ROOF DRAIN
SCALE: 3" = 1'-0"

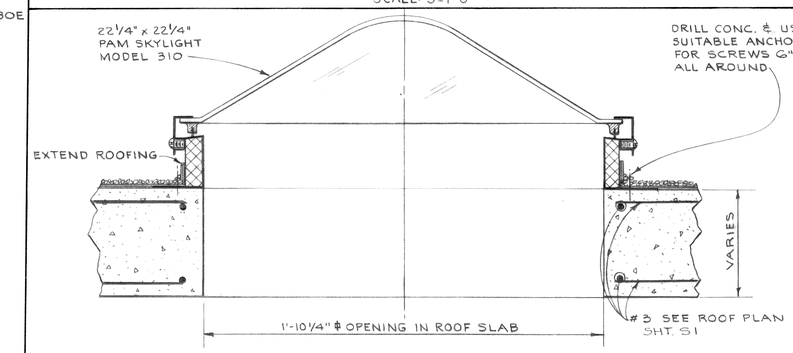

DETAIL 6 / A1
SKYLIGHT
SCALE: 3" = 1'-0"

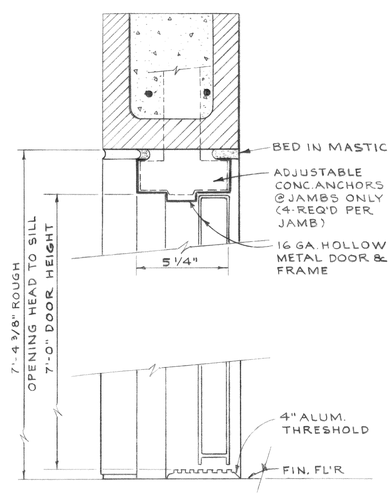

SECTION 4 / A1
DOOR
SCALE: 3" = 1'-0"

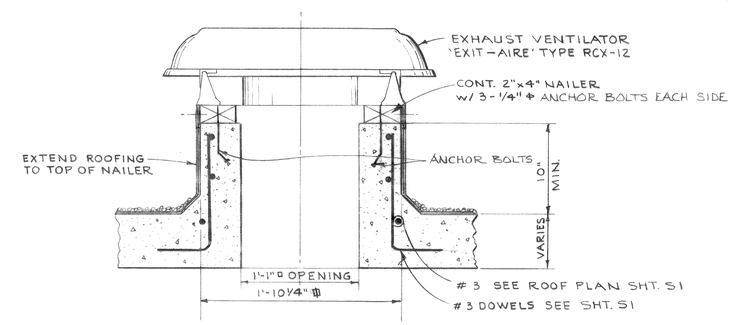

DETAIL 7 / A1
VENTILATOR
SCALE 1 1/2" = 1'-0"

GRAPHIC SCALES

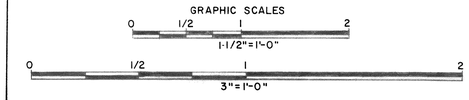

RAMON D. UPSAHL — STATE OF WASHINGTON — 12609 — REGISTERED PROFESSIONAL ENGINEER

DATE	NO.	REVISION	BY

DESIGNED RDU | APPROVED
DRAWN E. J. | SCALE AS SHOWN | DATE JULY, 1972
CHECKED | FILE 71-S-425.002

Stevens, Thompson & Runyan, Inc.
Engineers / Planners
PORTLAND SEATTLE BOISE

TOWN OF FERNDALE, WASHINGTON
AXTON ROAD INTERCEPTOR
SCHEDULE I

PUMP STATION 1 & 2
ARCHITECTURAL DETAILS

A2 / 2

MICROFILMED

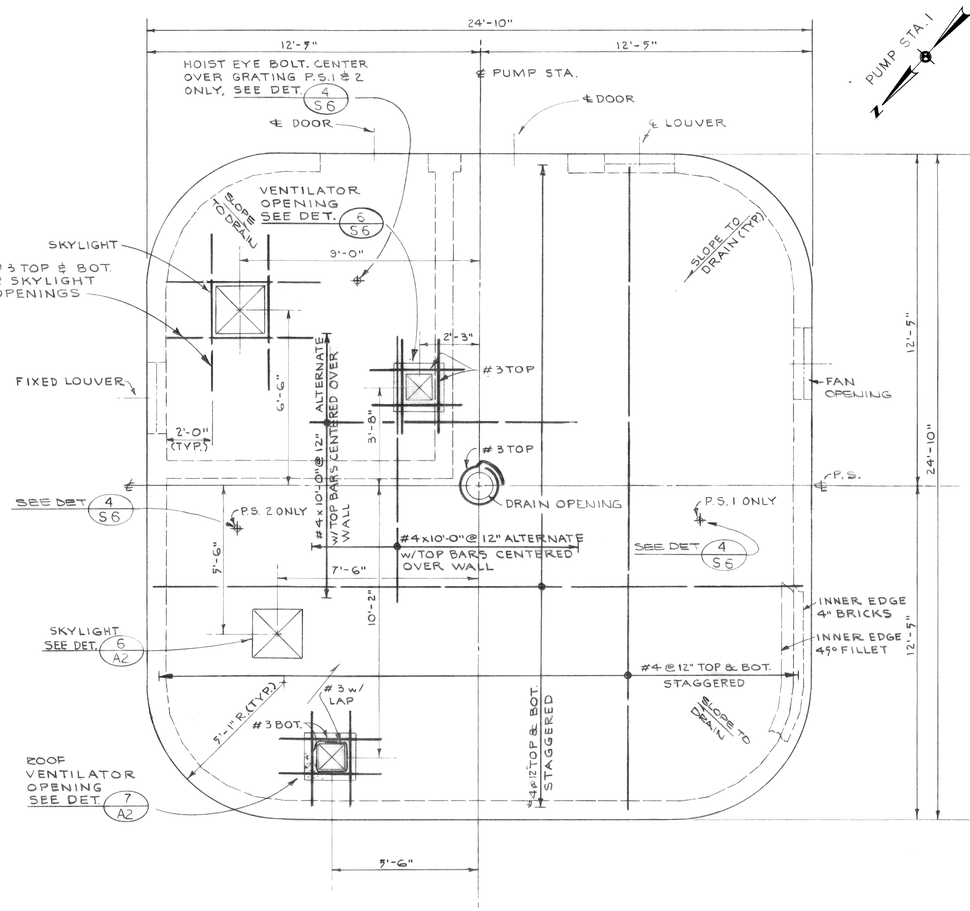

PLAN
ROOF
SCALE 3/8"=1'-0"

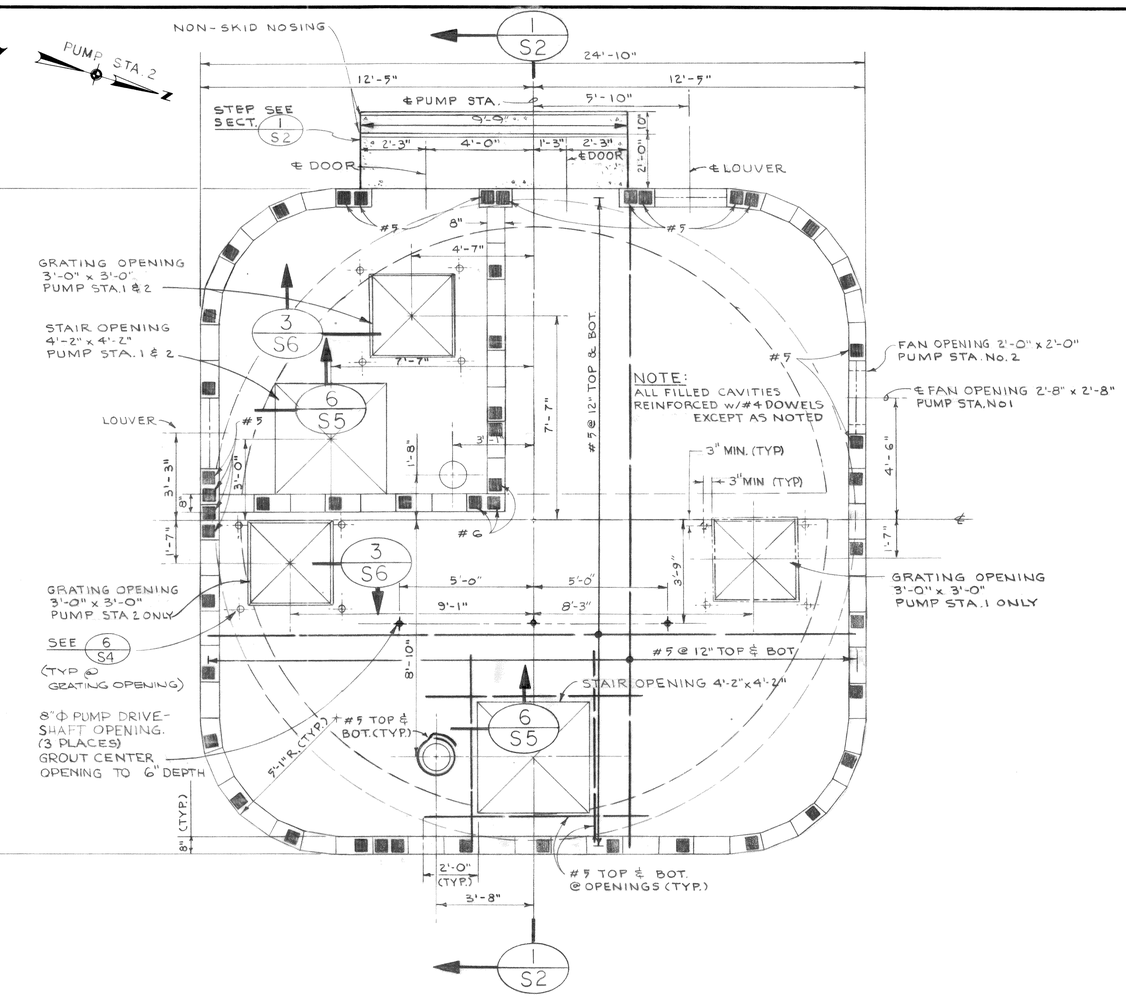

PLAN
MOTOR ROOM FLOOR
SCALE 3/8"=1'-0"

NOTES

DESIGN SPECIFICATIONS

Uniform Building Code (UBC)
American Concrete Institute (ACI)
American Institute of Steel Construction (AISC)

DESIGN LOADS

Roof Live Load	40 PSF
Floor Live Load	100 PSF + Mechanical
Wind	25 PSF
Seismic	Zone 3

GENERAL

1) The contractor may use other methods of construction for the foundation than those shown provided that he submit drawings and procedures to the engineer for review.

2) For general details and dimensions not shown on the structural drawings, see the architectural, mechanical and electrical drawings.

CONCRETE

1) Structural concrete is to be f_c'=3500 psi @ 28 days plus 15% for test cylinders

REINFORCING STEEL

1) All mild steel reinforcing is to be hard grade deformed bars in accordance with ASTM A615, Grade 60. Detail and place as per ACI Manual 315 and Code 318.

MISC. METAL

1) All structural steel is to be ASTM A-36

2) Steel machine bolts to be ASTM A-307.

3) All aluminum shapes and plates to be 6061-T6

4) Stainless steel bolts to be type 304.

GRAPHIC SCALE
0 1 2 3 4 5 6 7 8 9 10
3/8"=1'-0"

RAMON D. UPSANI
State of Washington
REGISTERED PROFESSIONAL ENGINEER

DATE	NO.	REVISION	BY

DESIGNED RDU | APPROVED Tech. Director
DRAWN E.J. | SCALE AS SHOWN | DATE JULY, 1972
CHECKED | FILE 71-S-425.002

Stevens, Thompson & Runyan, Inc.
Engineers/Planners
PORTLAND SEATTLE BOISE

TOWN OF FERNDALE, WASHINGTON
AXTON ROAD INTERCEPTOR
SCHEDULE I

PUMP STATION 1 & 2
STRUCTURAL ROOF & FLOOR PLANS

S1 / 6

MICROFILMED

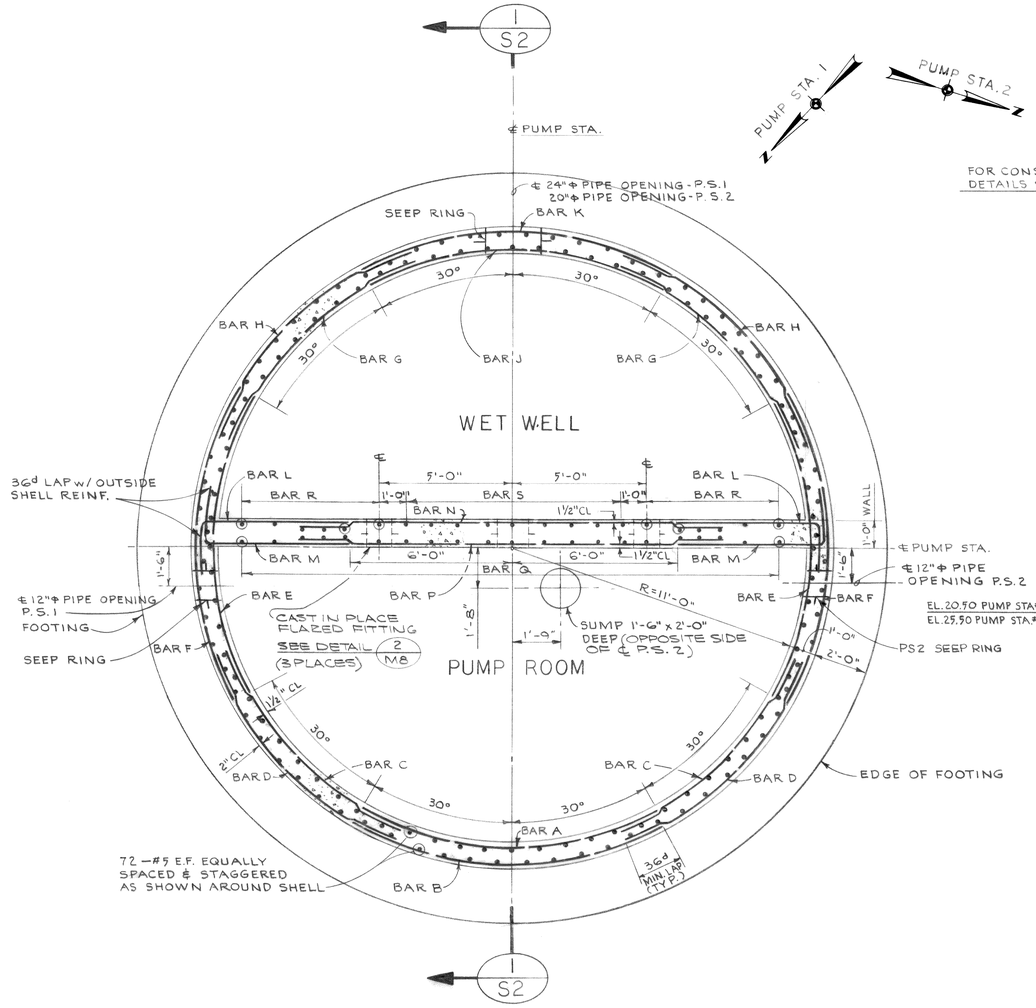

STRUCTURAL WALL PLAN

SCALE: 3/8" = 1'-0"

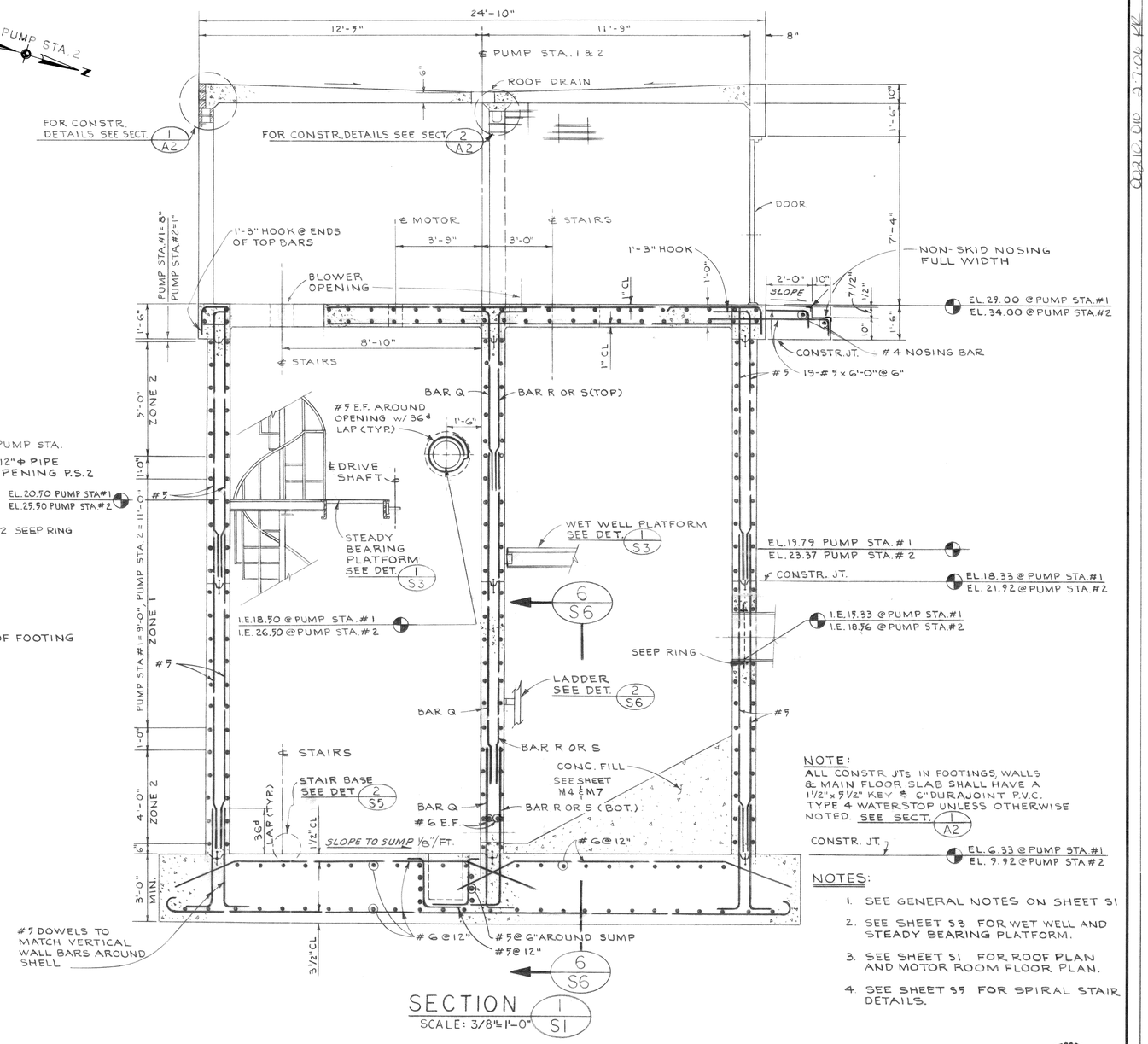

SECTION 1 / S1

SCALE: 3/8" = 1'-0"

NOTE:
ALL CONSTR. JTs IN FOOTINGS, WALLS & MAIN FLOOR SLAB SHALL HAVE A 1½" x 5½" KEY & 6" DURAJOINT P.V.C. TYPE 4 WATERSTOP UNLESS OTHERWISE NOTED. SEE SECT. 1 / A2

NOTES:

1. SEE GENERAL NOTES ON SHEET S1
2. SEE SHEET S3 FOR WET WELL AND STEADY BEARING PLATFORM.
3. SEE SHEET S1 FOR ROOF PLAN AND MOTOR ROOM FLOOR PLAN.
4. SEE SHEET S5 FOR SPIRAL STAIR DETAILS.

REINFORCING BAR SCHEDULE

ZONE \ BAR	A	B	C	D	E	F	G	H	J	K	L	M	N	P	Q	R	S
1	#4@12"	#4@12"	#4@12"	#4@12"	#8@12"	#6@12"	#6@12"	#6@12"	#6@12"	#6@12"	#7@6"	#6@12"	#5@12"	#6@6"	#6@12"	#5@12"	#5@12"
2	#4@12"	#4@12"	#4@12"	#4@12"	#5@12"	#5@12"	#4@12"	#4@12"	#4@12"	#4@12"	#5@12"	#5@12"	#5@12"	#5@12"	#5@12"	#8@12"	#7@12" TOP #8@6" BOT.

GRAPHIC SCALE
0 1 2 3 4 5 6 7 8 9 10
3/8" = 1'-0"

RAMON D. UPSAHL — STATE OF WASHINGTON — REGISTERED PROFESSIONAL ENGINEER

DATE	NO.	REVISION	BY

DESIGNED RDU
DRAWN E.J.
CHECKED
APPROVED
SCALE AS SHOWN
DATE JULY, 1972
FILE 71-S-425.002

Stevens, Thompson & Runyan, Inc.
Engineers / Planners
PORTLAND SEATTLE BOISE

TOWN OF FERNDALE, WASHINGTON
AXTON ROAD INTERCEPTOR
SCHEDULE I

PUMP STATION 1 & 2
STRUCTURAL WALL PLAN & SECTION

S2 / 6

MICROFILMED

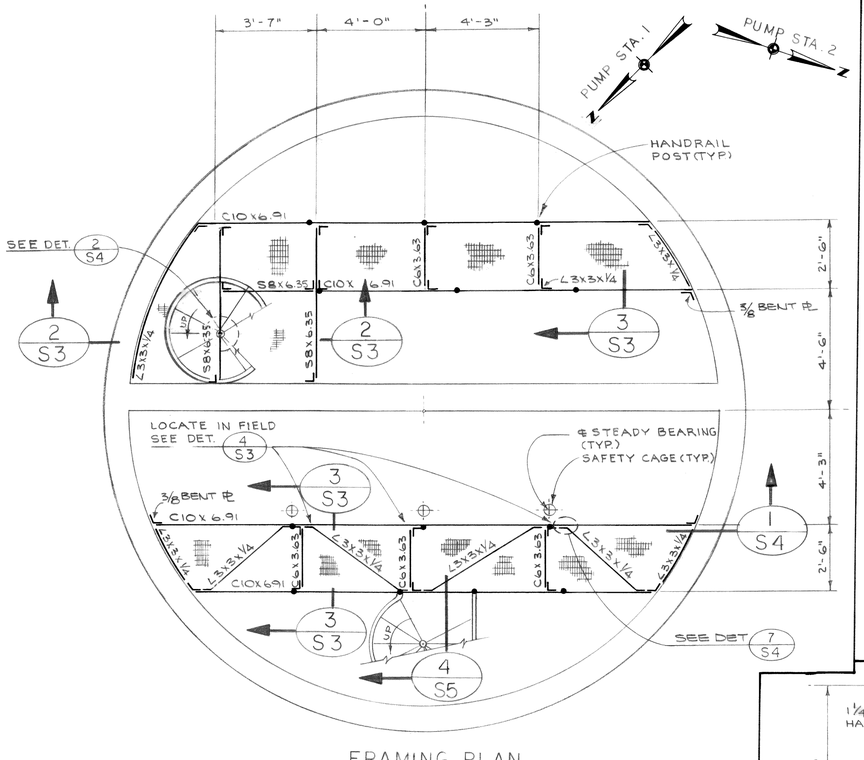

FRAMING PLAN

PLATFORMS (1 / S2)

SCALE: 3/8" = 1'-0"

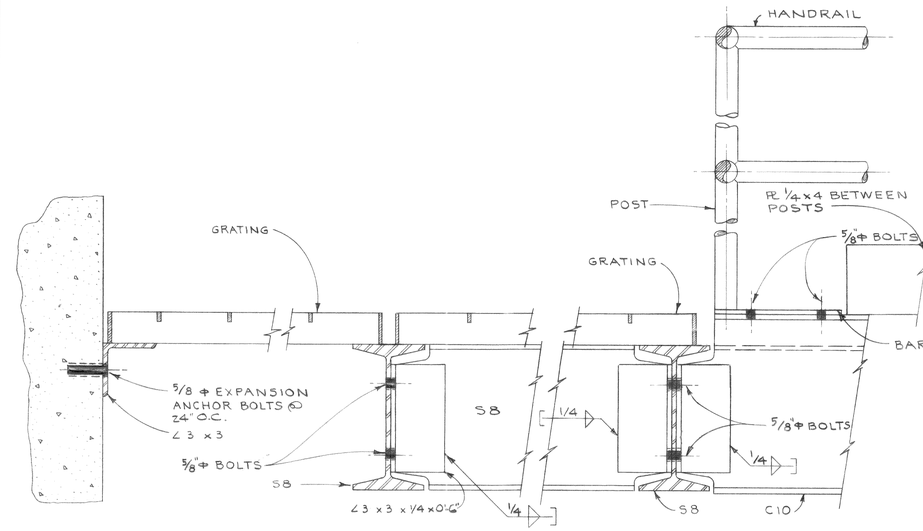

SECTION (2 / S3)

SCALE: 3" = 1'-0"

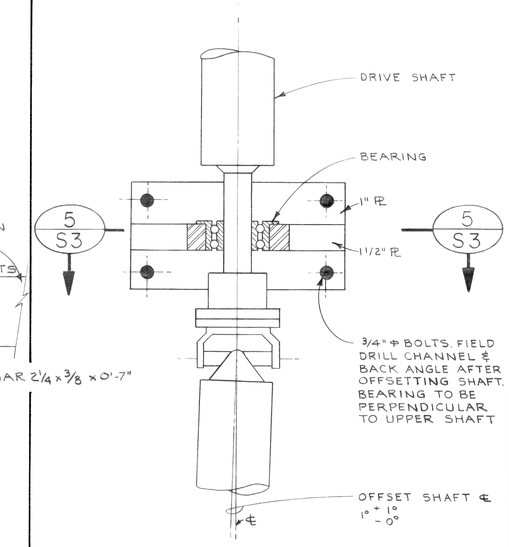

SECTION (4 / S3)

SCALE: 3" = 1'-0"

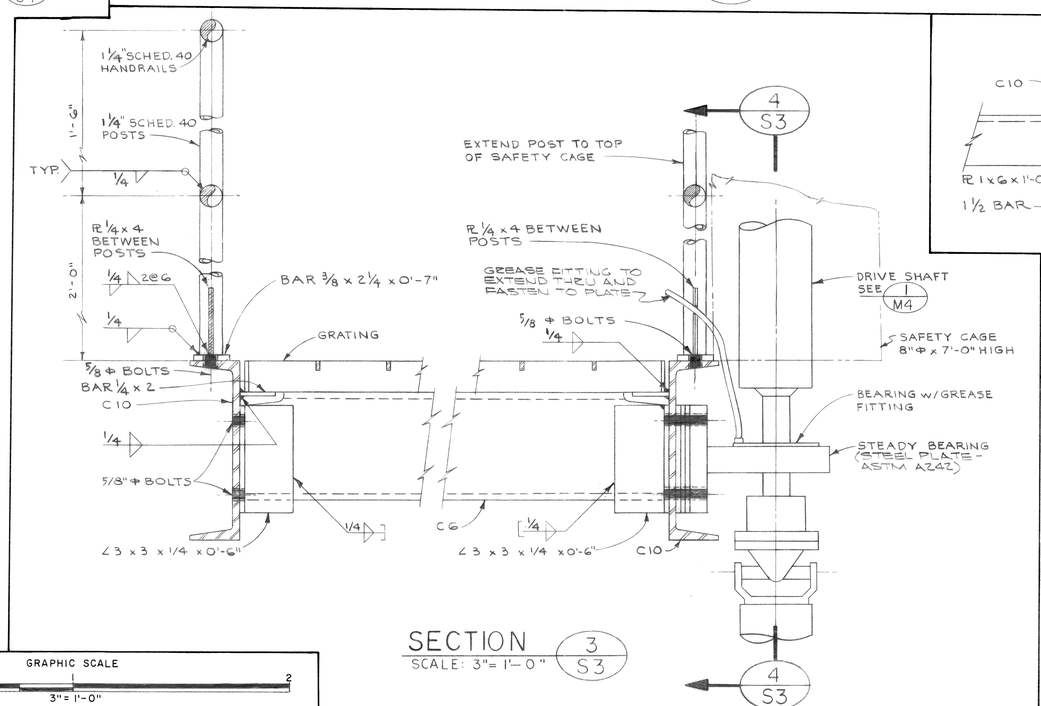

SECTION (3 / S3)

SCALE: 3" = 1'-0"

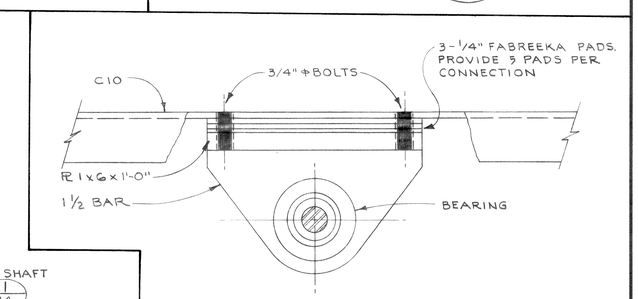

SECTION (5 / S3)

SCALE: 3" = 1'-0"

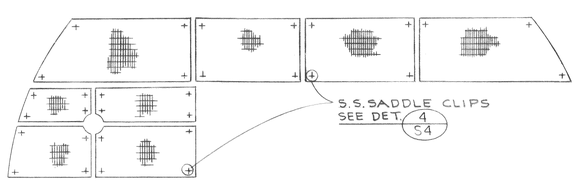

PLAN

GRATING LAYOUT

SCALE: 3/8" = 1'-0"

NOTES:

1. ALL BOLTS FOR PLATFORMS ARE TO BE (304) STAINLESS STEEL UNLESS OTHERWISE SHOWN OR NOTED.
2. ALL ANGLES, BEAMS, CHANNELS, PLATES, & BARS FOR THE PLATFORMS ARE TO BE ALUMINUM.
3. ALL HANDRAIL & GRATING IS TO BE ALUMINUM, SEE REQUIREMENTS IN THE SPECIFICATIONS.

RAMON D. UPSAHL — STATE OF WASHINGTON — REGISTERED PROFESSIONAL ENGINEER

GRAPHIC SCALE: 0 — 1/2 — 1 — 2 — 3" = 1'-0"

DATE	NO.	REVISION	BY

DESIGNED RDU — DRAWN E.J. — CHECKED HPG — APPROVED — SCALE AS SHOWN — DATE JULY, 1972 — FILE 71-S-425.002

Stevens, Thompson & Runyan, Inc.
Engineers/Planners
PORTLAND SEATTLE BOISE

TOWN OF FERNDALE, WASHINGTON
AXTON ROAD INTERCEPTOR
SCHEDULE I

PUMP STATION 1 & 2
STRUCTURAL PLATFORM PLAN & DETAILS

S3 / 6

MICROFILMED

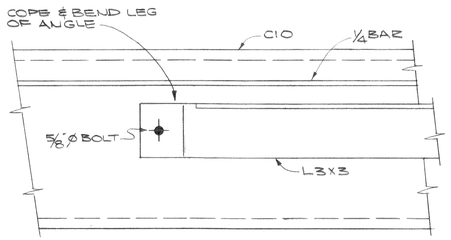

DETAIL 7 / S3
SCALE: 3"= 1'-0"

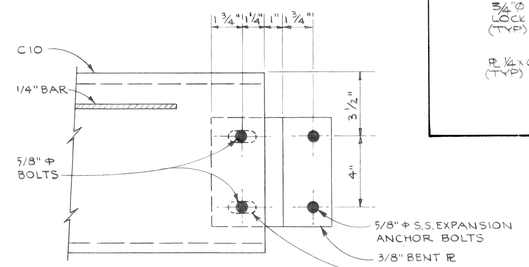

SECTION 1 / S3
SCALE: 3"= 1'-0"

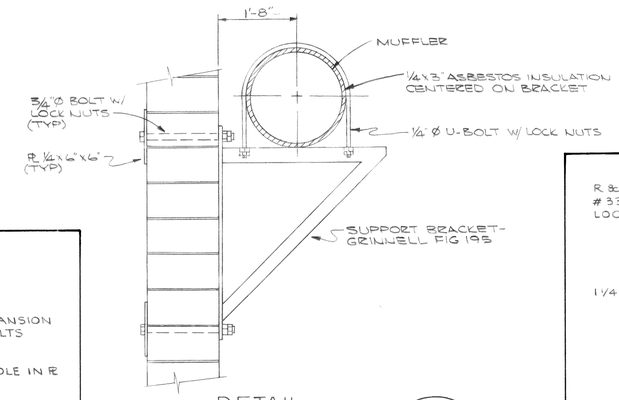

DETAIL 7 / M2
GENERATOR MUFFLER SUPPORT
NO SCALE

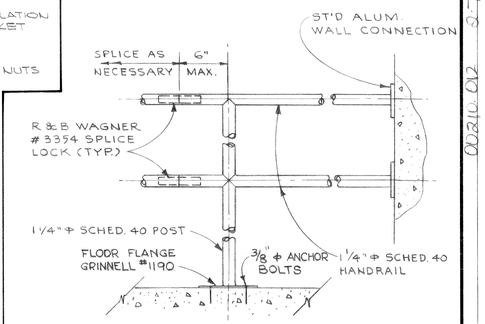

DETAIL 5 / M4
SCALE: 1 1/2"=1'-0"

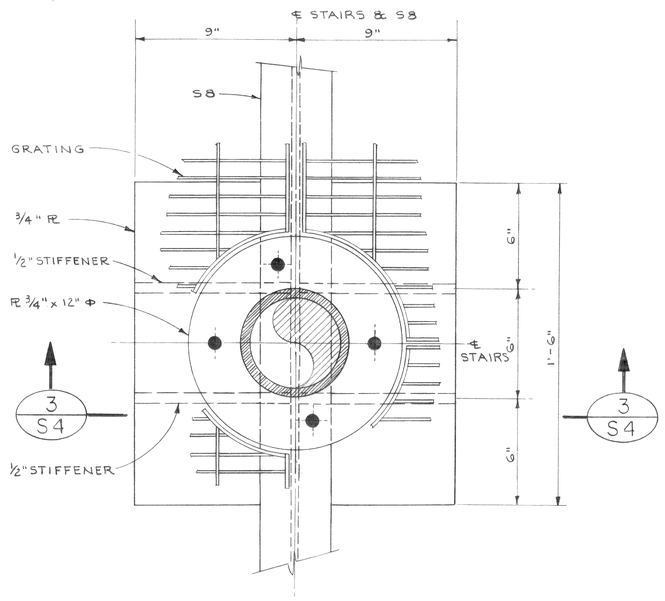

DETAIL 2 / S3
SCALE: 3"=1'-0"

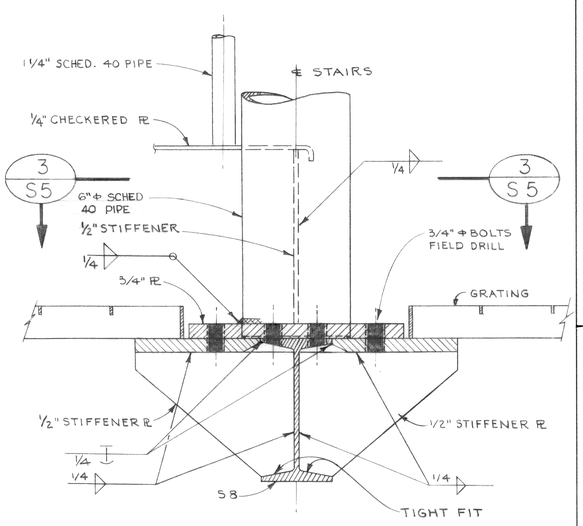

SECTION 3 / S4
SCALE: 3"= 1'-0"

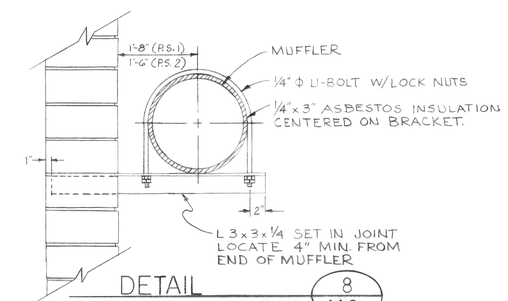

DETAIL 8 / M2
GENERATOR MUFFLER SUPPORT
NO SCALE

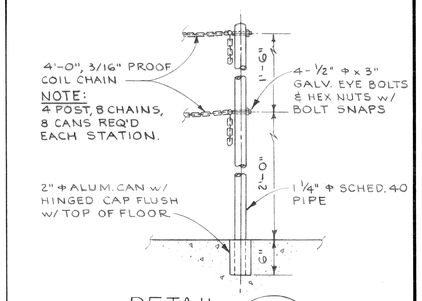

DETAIL 6 / S1
SAFETY POST
NO SCALE

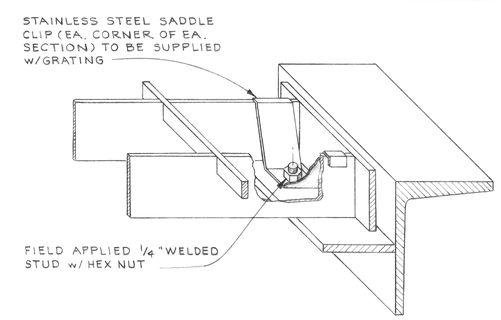

DETAIL 4 / S3
NO SCALE

GRAPHIC SCALES

0 1/2 1 2
11/2"=1'-0"

0 1/2 1 2
3"= 1'-0"

RAMON D. UPSAHL — STATE OF WASHINGTON — REGISTERED PROFESSIONAL ENGINEER

DATE	NO.	REVISION	BY

DESIGNED RDU | APPROVED
DRAWN E.J. | SCALE AS SHOWN | DATE JULY, 1972
CHECKED | FILE 71-S-425.002

Stevens, Thompson & Runyan, Inc.
Engineers/Planners
PORTLAND SEATTLE BOISE

TOWN OF FERNDALE, WASHINGTON
AXTON ROAD INTERCEPTOR
SCHEDULE I

PUMP STATION 1 & 2
STRUCTURAL DETAILS

S4 / 6

MICROFILMED

SHANNON & CO

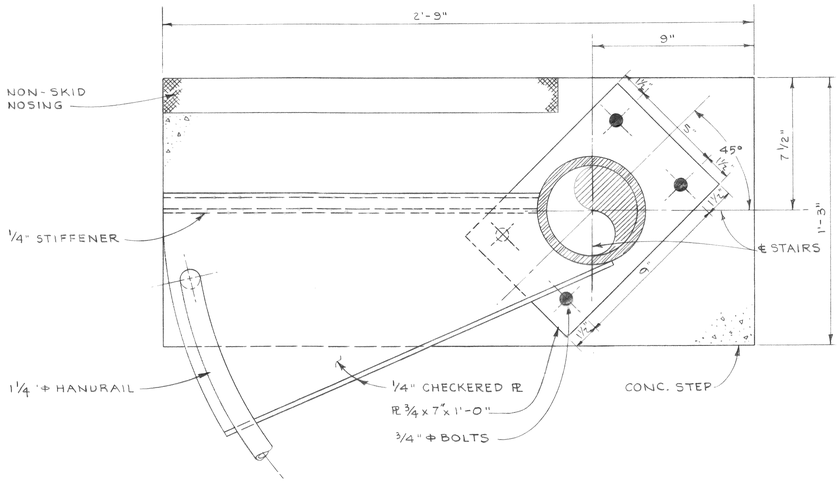

SECTION 1/S5
SCALE: 3"=1'-0"

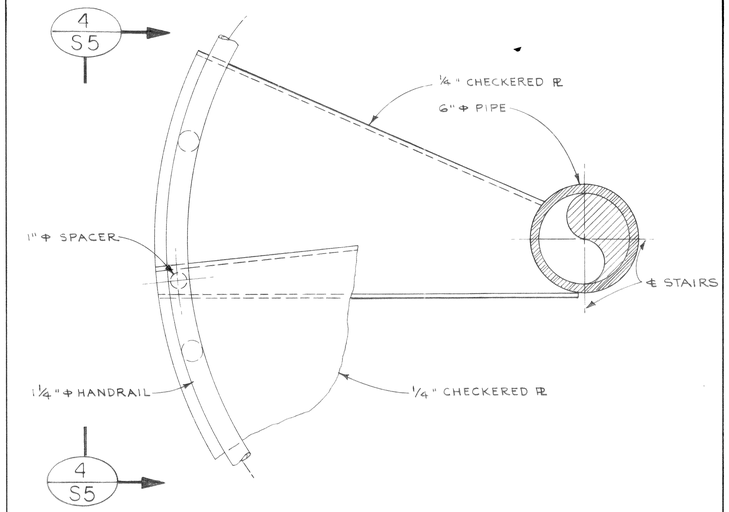

SECTION 3/S4
SCALE: 3"=1'-0"

NOTE:
ALL SPIRAL STAIRS 4'-0" O.D. AND WITH 12 TREADS PER REVOLUTION @ 8 " RISE. DESCEND CLOCKWISE

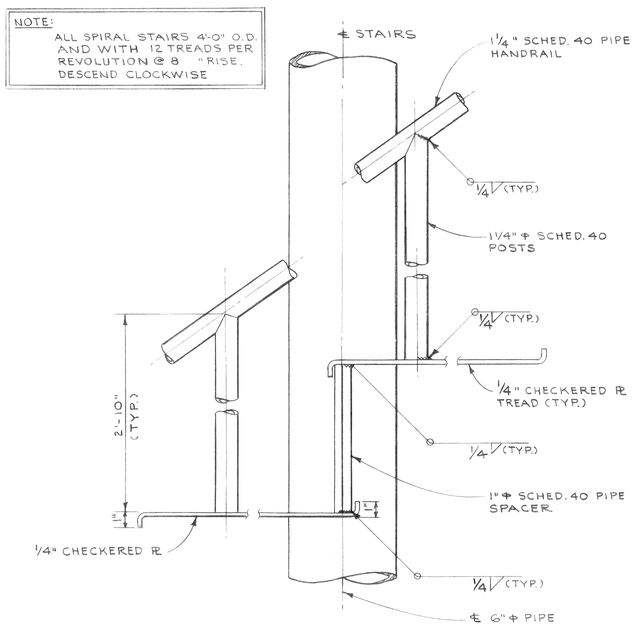

SECTION 5/S5
SCALE: 3"=1'-0"

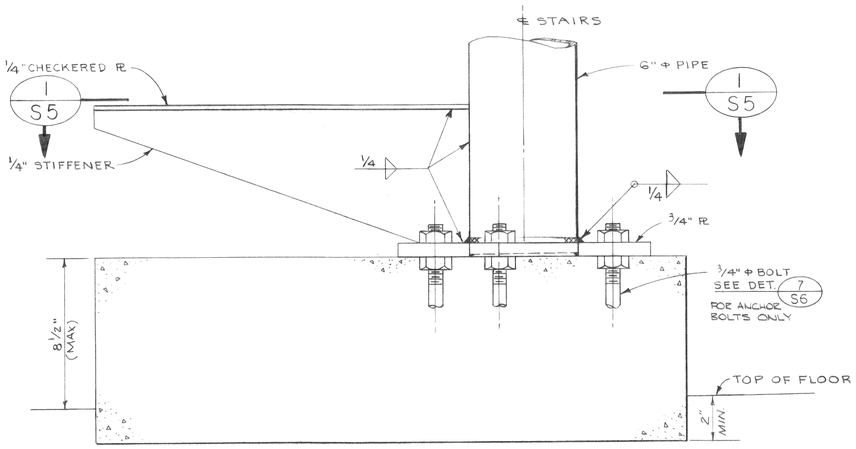

DETAIL 2/S2
SCALE: 3"=1'-0"

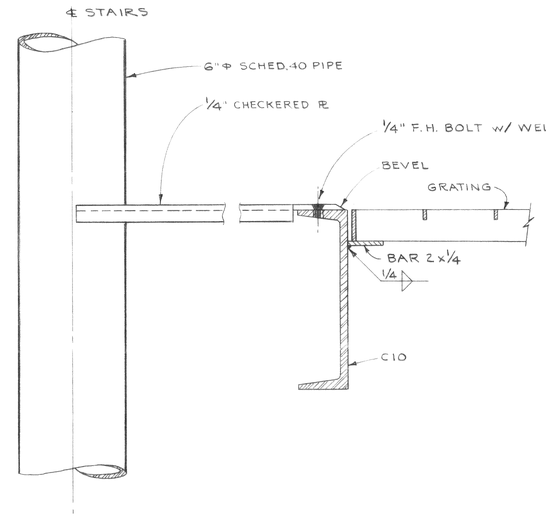

SECTION 4/S3
SCALE 3"=1'-0"

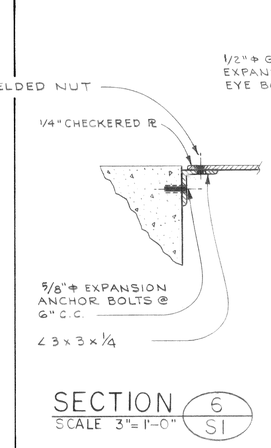

SECTION 6/S1
SCALE 3"=1'-0"

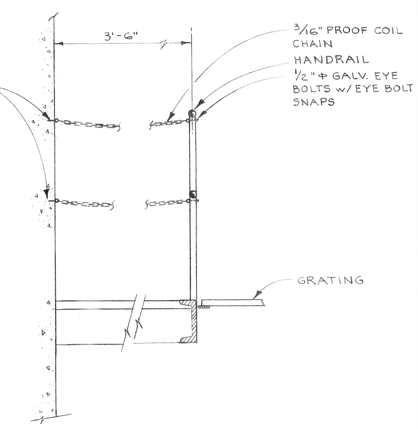

DETAIL 7/M4
NO SCALE

GRAPHIC SCALE
0 1/2 1 2
3" = 1'-0"

RAMON D. UPSAHL
STATE OF WASHINGTON
REGISTERED PROFESSIONAL ENGINEER

DATE	NO.	REVISION	BY

DESIGNED RDU
DRAWN E.J.
CHECKED
APPROVED
SCALE AS SHOWN DATE JULY, 1972
FILE 71-S-425.002

Stevens, Thompson & Runyan, Inc.
Engineers/Planners
PORTLAND SEATTLE BOISE

TOWN OF FERNDALE, WASHINGTON
AXTON ROAD INTERCEPTOR
SCHEDULE I

PUMP STATION 1 & 2
STRUCTURAL DETAILS

S5/6

MICROFILMED

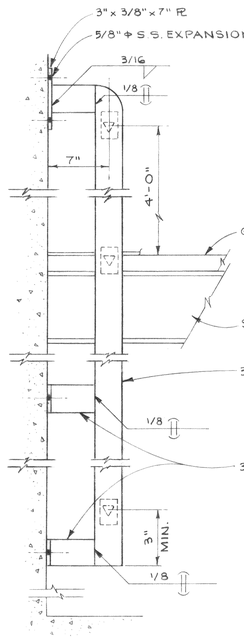

SECTION 1/S6
WET WELL LADDER
SCALE: 1 1/2" = 1'-0"

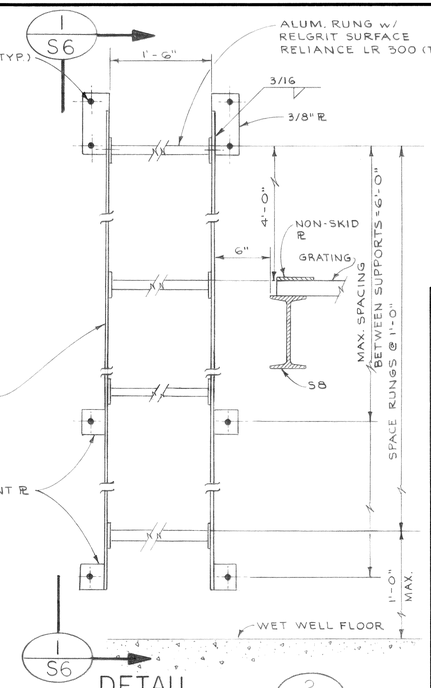

DETAIL 2/M4
WET WELL LADDER
SCALE: 1 1/2" = 1'-0"

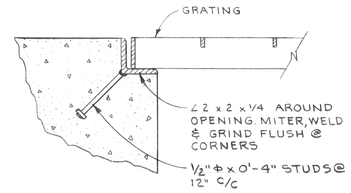

DETAIL 3/S1
ACCESS OPENING
SCALE: 1 1/2" = 1'-0"

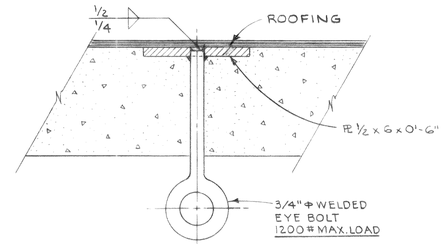

DETAIL 4/S1
SCALE: 3" = 1'-0"

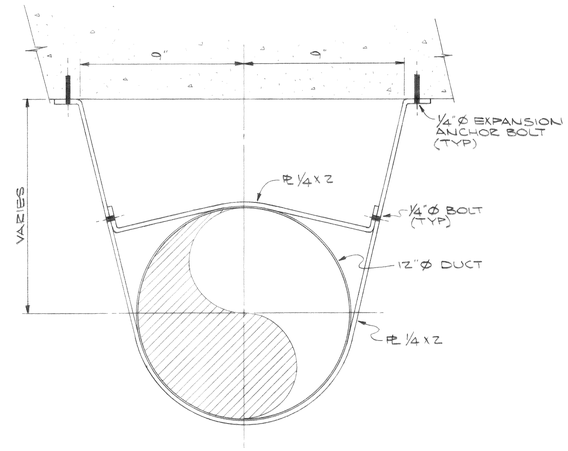

DETAIL 11/M4
WALL OR CEILING DUCT SUPPORT
SCALE: 3" = 1'-0"

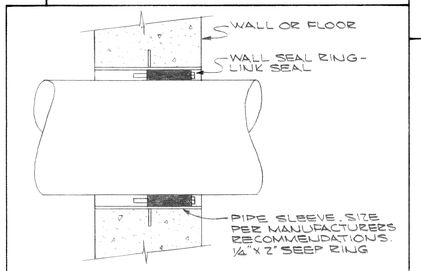

DETAIL 10/M5
SCALE: 1 1/2" = 1'-0"

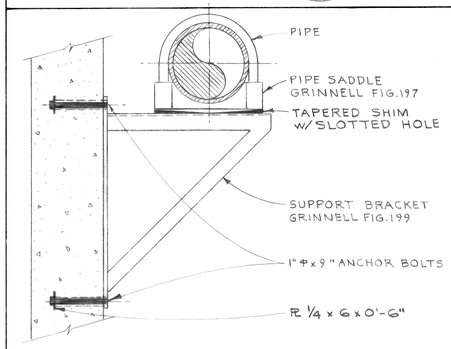

DETAIL 5/M3
PIPE SUPPORT
SCALE: 1" = 1'-0"

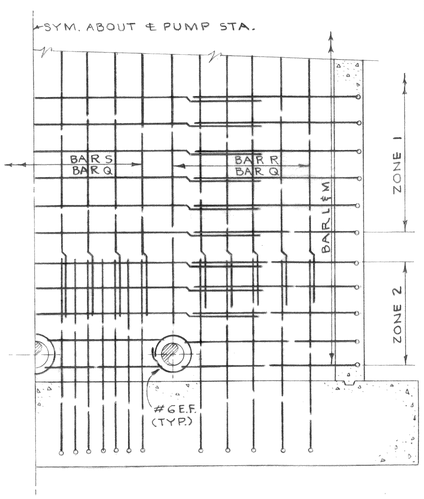

SECTION 6/S2
SCALE: 3/8" = 1'-0"

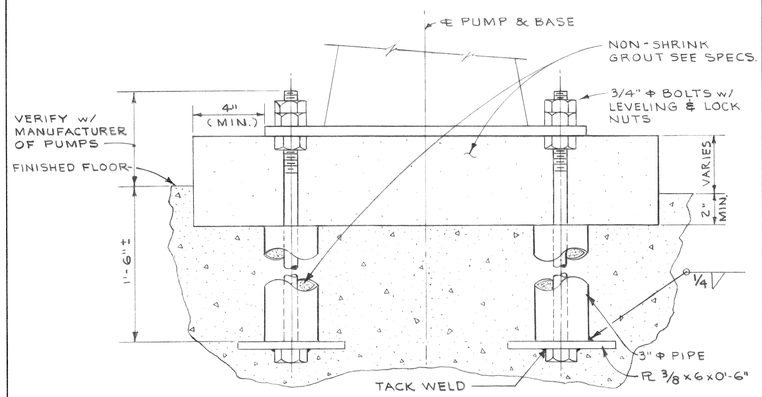

DETAIL 7/M8
PUMP BASE
SCALE: 3" = 1'-0"

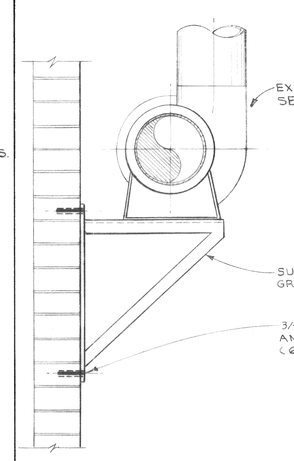

SECTION 8/S6
SCALE: 1" = 1'-0"

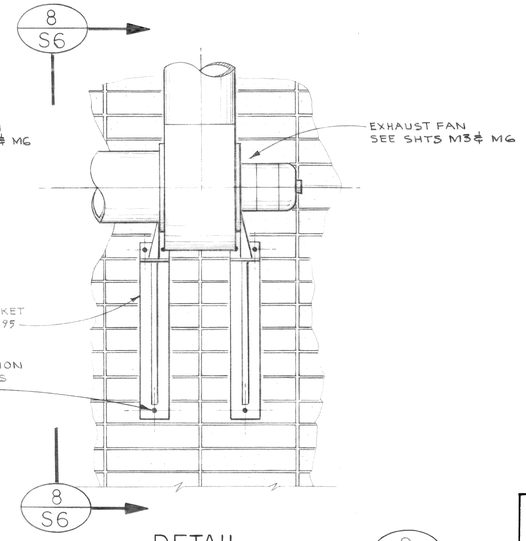

DETAIL 9/M4
EXHAUST FAN SUPPORTS
SCALE: 1" = 1'-0"

GRAPHIC SCALE 0 1/2 1 2 — 3" = 1'-0"
GRAPHIC SCALE 0 1/2 1 2 — 1-1/2" = 1'-0"
GRAPHIC SCALE 0 1 2 3 4 5 6 7 8 9 10 — 3/8" = 1'-0"
GRAPHIC SCALE 0 1/2 1 2 3 4 — 1" = 1'-0"
GRAPHIC SCALE 0 1/2 1 2 3 4 5 — 3/4" = 1'-0"

RAMON D. UPSAHL — STATE OF WASHINGTON — REGISTERED PROFESSIONAL ENGINEER

DATE	NO.	REVISION	BY

DESIGNED RDU — APPROVED Frank Hamer
DRAWN E.J. — SCALE AS SHOWN — DATE JULY, 1972
CHECKED AB — FILE 71-S-425.002

Stevens, Thompson & Runyan, Inc.
Engineers / Planners
PORTLAND SEATTLE BOISE

TOWN OF FERNDALE, WASHINGTON
AXTON ROAD INTERCEPTOR
SCHEDULE I

PUMP STATION 1 & 2
STRUCTURAL DETAILS

S6/6

MICROFILMED

SHANNON & CO

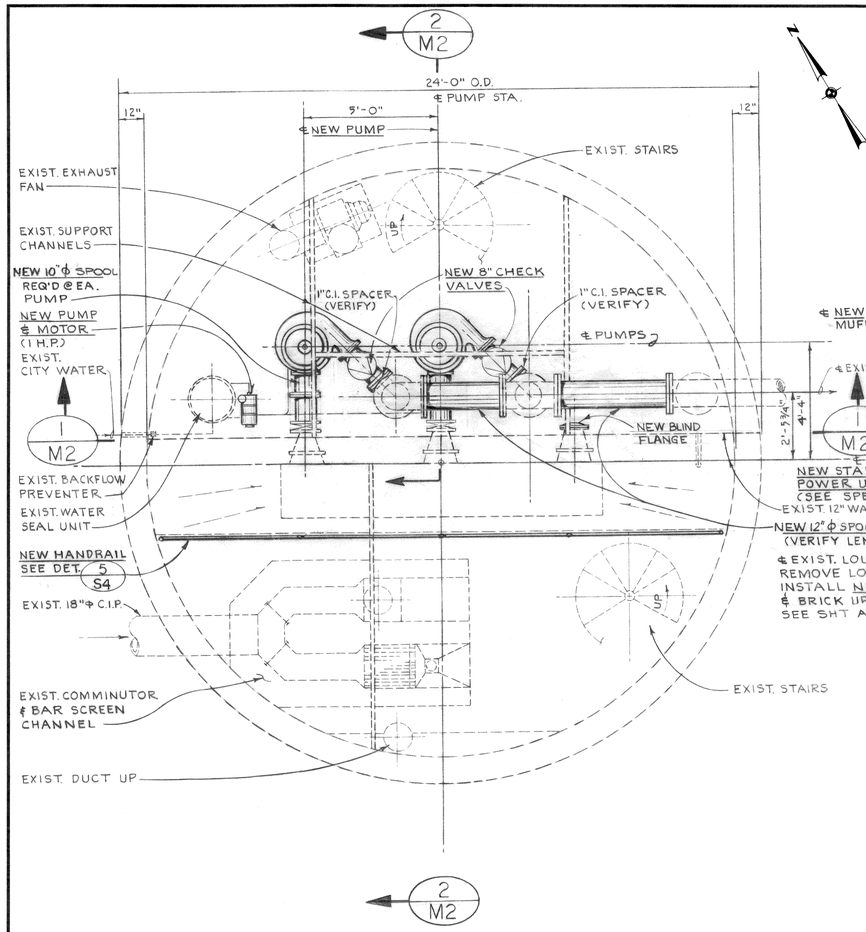

PUMP ROOM PLAN

SCALE: 3/8" = 1'-0"

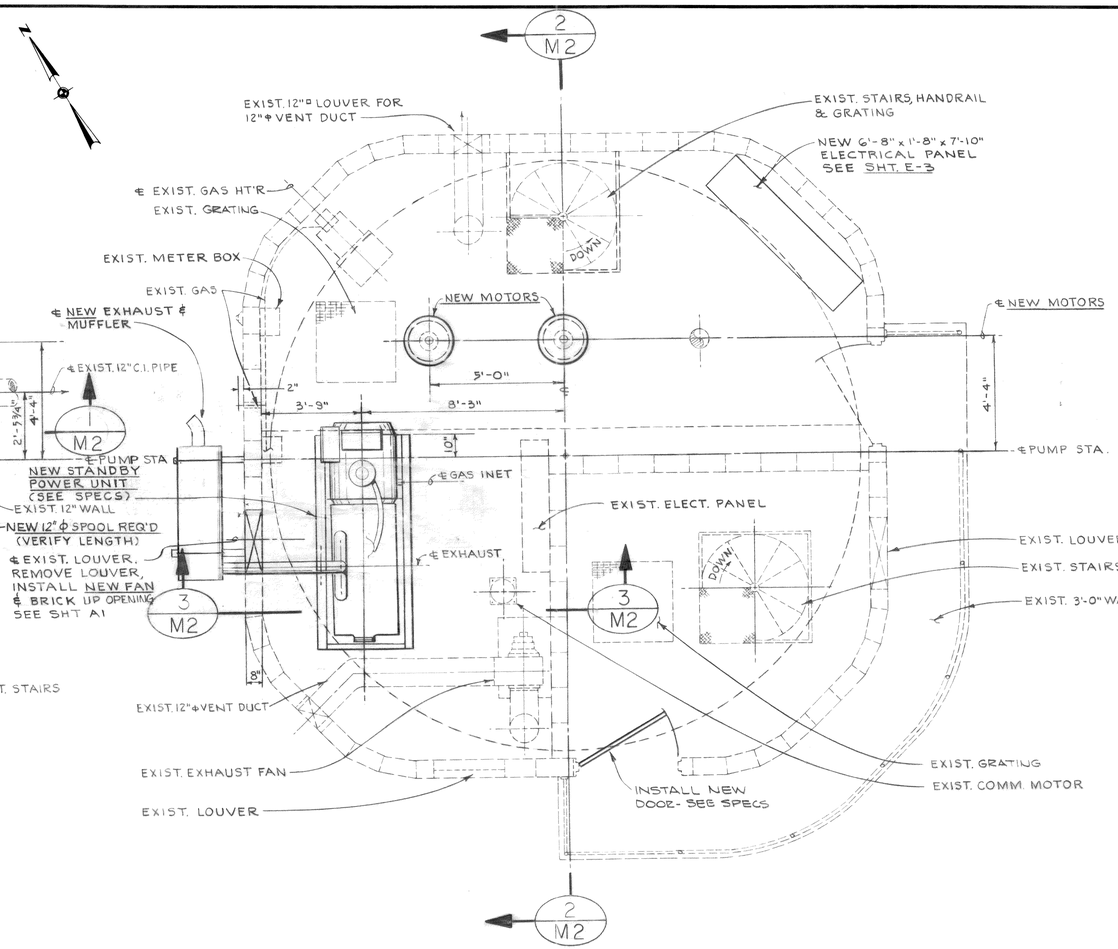

MOTOR ROOM PLAN

SCALE: 3/8" = 1'-0"

NOTES:

1. 3 EXIST. PUMPS & MOTORS, WATER SEAL PUMP & MOTOR, ELECTRICAL PANEL, STANDBY POWER GENERATOR, & RELATED MISC. ITEMS TO BE REMOVED & REPLACED w/ NEW EQUIP. AS INDICATED.
2. REMOVE ALL VALVE STANDS, STEMS & SUPPORTS.
3. ALL OPEN HOLES CAUSED BY EQUIPMENT REMOVAL TO BE GROUTED FULL DEPTH EXCEPT PUMP DRIVE SHAFT.
4. MISC. ITEMS TO BE REMOVED SEE SHT. E-2

LEGEND

- - - - - EXIST. STRUCT, PIPING, MOTORS & PUMPS

——— NEW STRUCT, PIPES, MOTORS, PUMPS & DETAILS.

GRAPHIC SCALE

0 1 2 3 4 5 6 7 8 9 10

3/8" = 1'-0"

TED STRICKLIN STATE OF WASHINGTON REGISTERED PROFESSIONAL ENGINEER 9662

DATE	NO.	REVISION	BY

DESIGNED T.S. | APPROVED Ted Strickland
DRAWN E.J. | SCALE AS SHOWN | DATE JULY, 1972
CHECKED | FILE 71-S-425.002

Stevens, Thompson & Runyan, Inc.
Engineers/Planners
PORTLAND SEATTLE BOISE

TOWN OF FERNDALE, WASHINGTON
AXTON ROAD INTERCEPTOR
SCHEDULE I

EXISTING PUMP STATION
MECHANICAL MODIFICATIONS

MI / 8

MICROFILMED

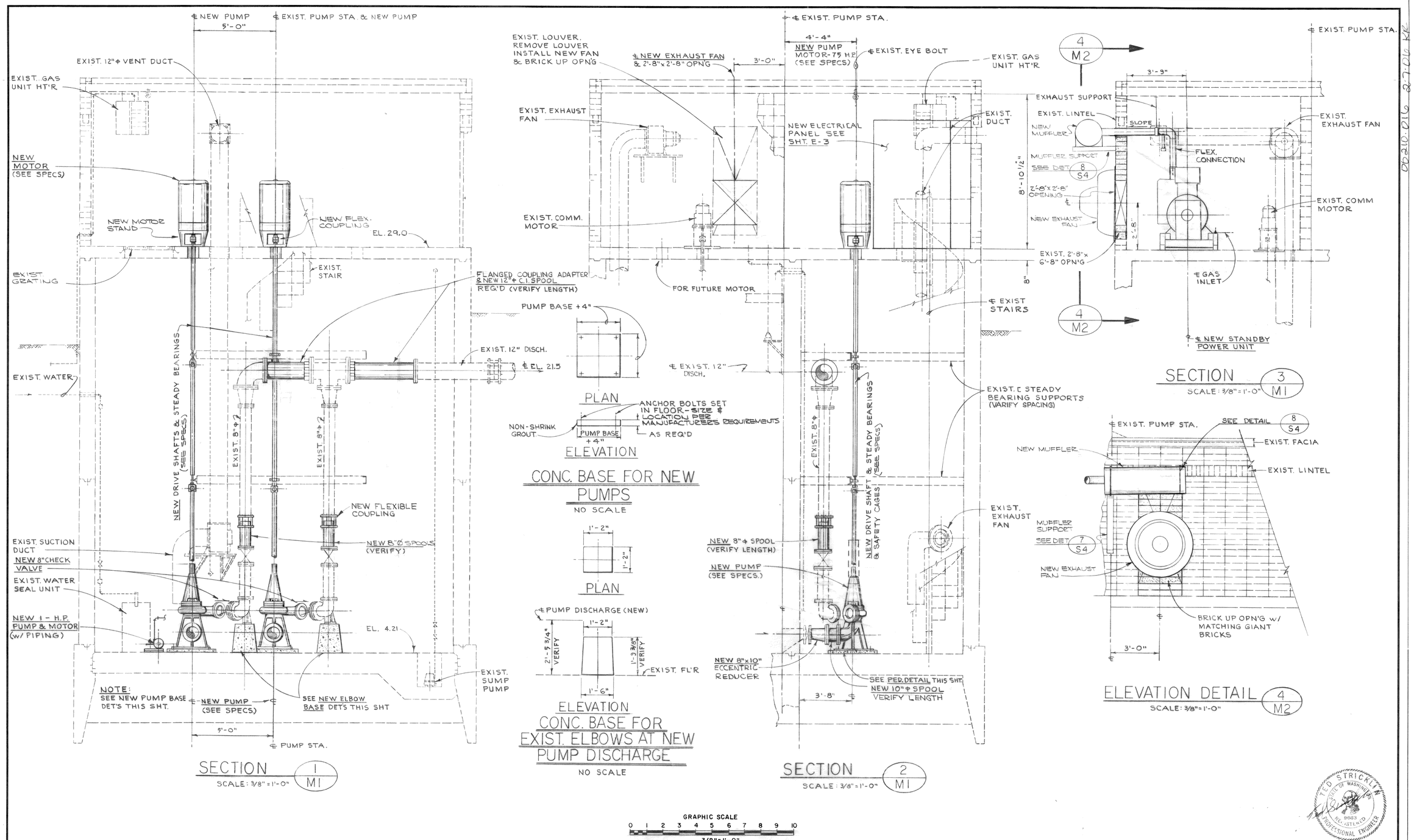

DATE	NO.	REVISION	BY

DESIGNED TB
DRAWN E.J.
CHECKED LHB
APPROVED Tech Stevens
SCALE AS SHOWN
DATE JULY, 1972
FILE 71-S-425.002

Stevens, Thompson & Runyan, Inc.
Engineers/Planners
PORTLAND SEATTLE BOISE

TOWN OF FERNDALE, WASHINGTON
AXTON ROAD INTERCEPTOR
SCHEDULE I

EXISTING PUMP STATION MECHANICAL MODIFICATIONS

M2 / 8

TED STRICKLAND — STATE OF WASHINGTON — 9683 — REGISTERED PROFESSIONAL ENGINEER

MICROFILMED

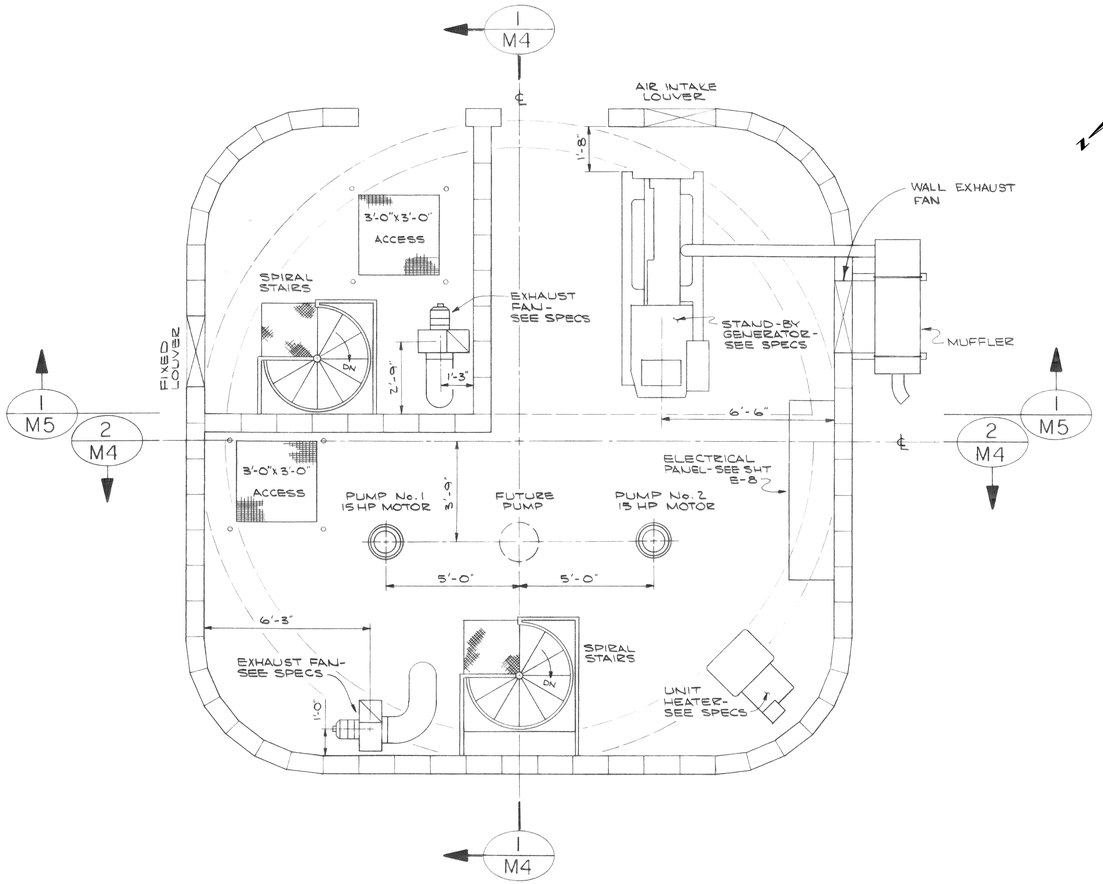

PLAN

MOTOR ROOM FLOOR

SCALE: 3/8"=1'-0"

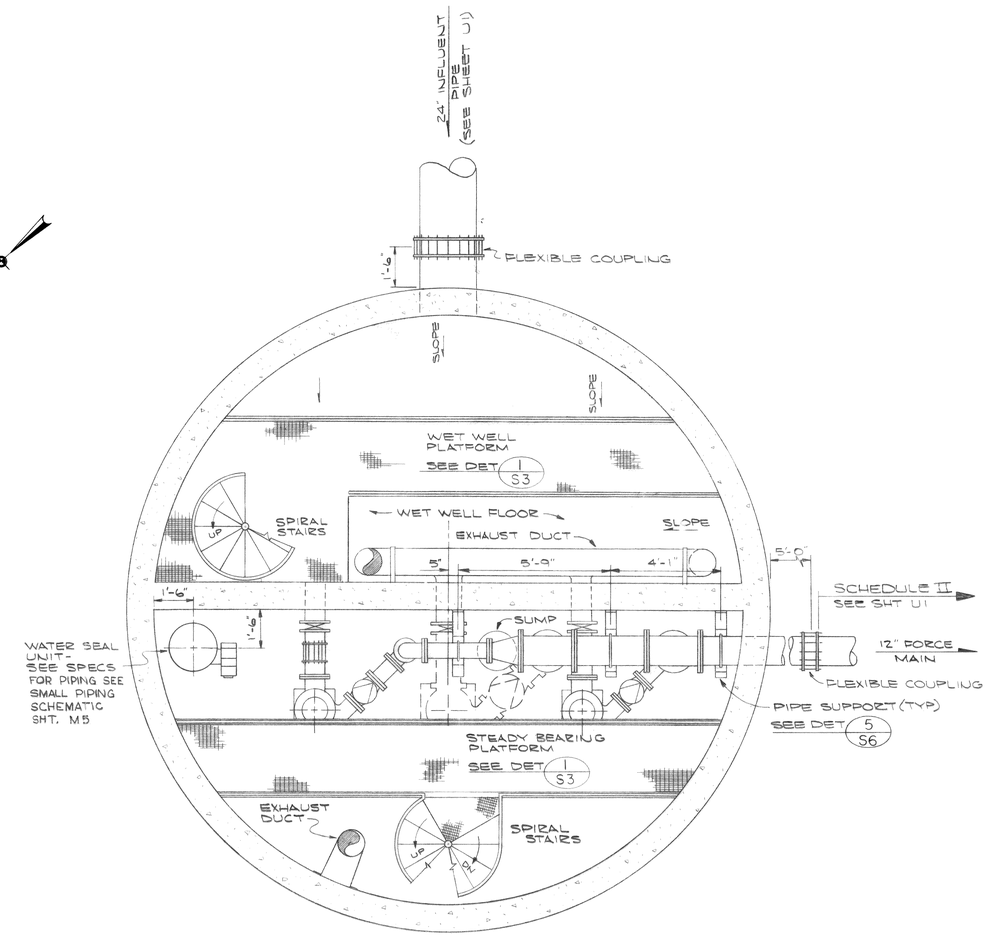

PLAN

PUMP ROOM & WET WELL

SCALE: 3/8"=1'-0"

GRAPHIC SCALES

0 1 2 3 4 5 6 7 8 9 10

3/8"=1'-0"

DATE	NO.	REVISION	BY

DESIGNED T.S.
DRAWN J.M.H.
CHECKED
APPROVED
SCALE AS SHOWN DATE JULY, 1972
FILE 71-S-425.002

Stevens, Thompson & Runyan, Inc.
Engineers/Planners
PORTLAND SEATTLE BOISE

TOWN OF FERNDALE, WASHINGTON
AXTON ROAD INTERCEPTOR
SCHEDULE I

PUMP STATION I
MECHANICAL PLANS

M3/8

MICROFILMED

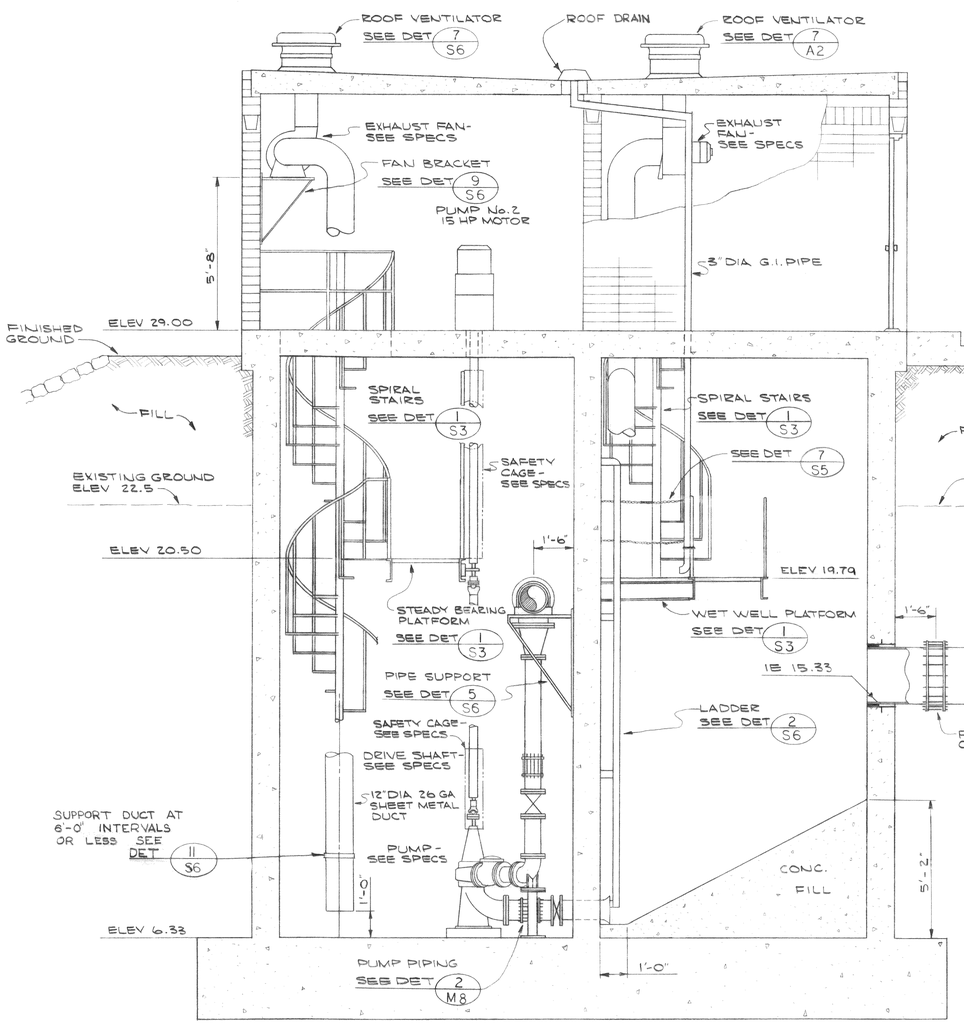

SECTION 1 / M3
SCALE 3/8"=1'-0"

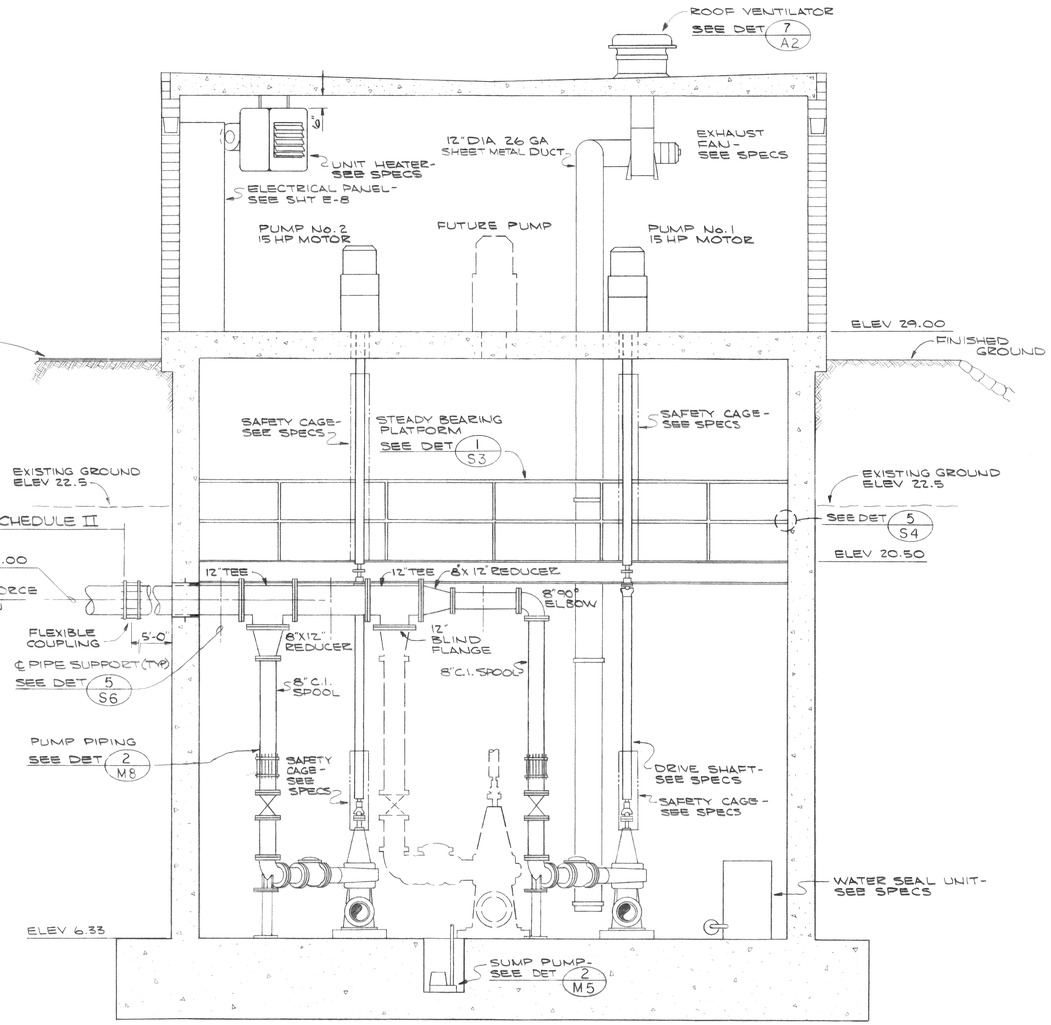

SECTION 2 / M3
SCALE 3/8"=1'-0"

GRAPHIC SCALE
0 1 2 3 4 5 6 7 8 9 10
3/8" = 1'-0"

DATE	NO.	REVISION	BY

DESIGNED T. S. | APPROVED Richard Ebmer
DRAWN J.M.H. | SCALE AS SHOWN | DATE JULY, 1972
CHECKED | FILE 71-S-425.002

Stevens, Thompson & Runyan, Inc.
Engineers / Planners
PORTLAND SEATTLE BOISE

TOWN OF FERNDALE, WASHINGTON
AXTON ROAD INTERCEPTOR
SCHEDULE I

PUMP STATION I
MECHANICAL SECTIONS

M4 / 8

MICROFILMED

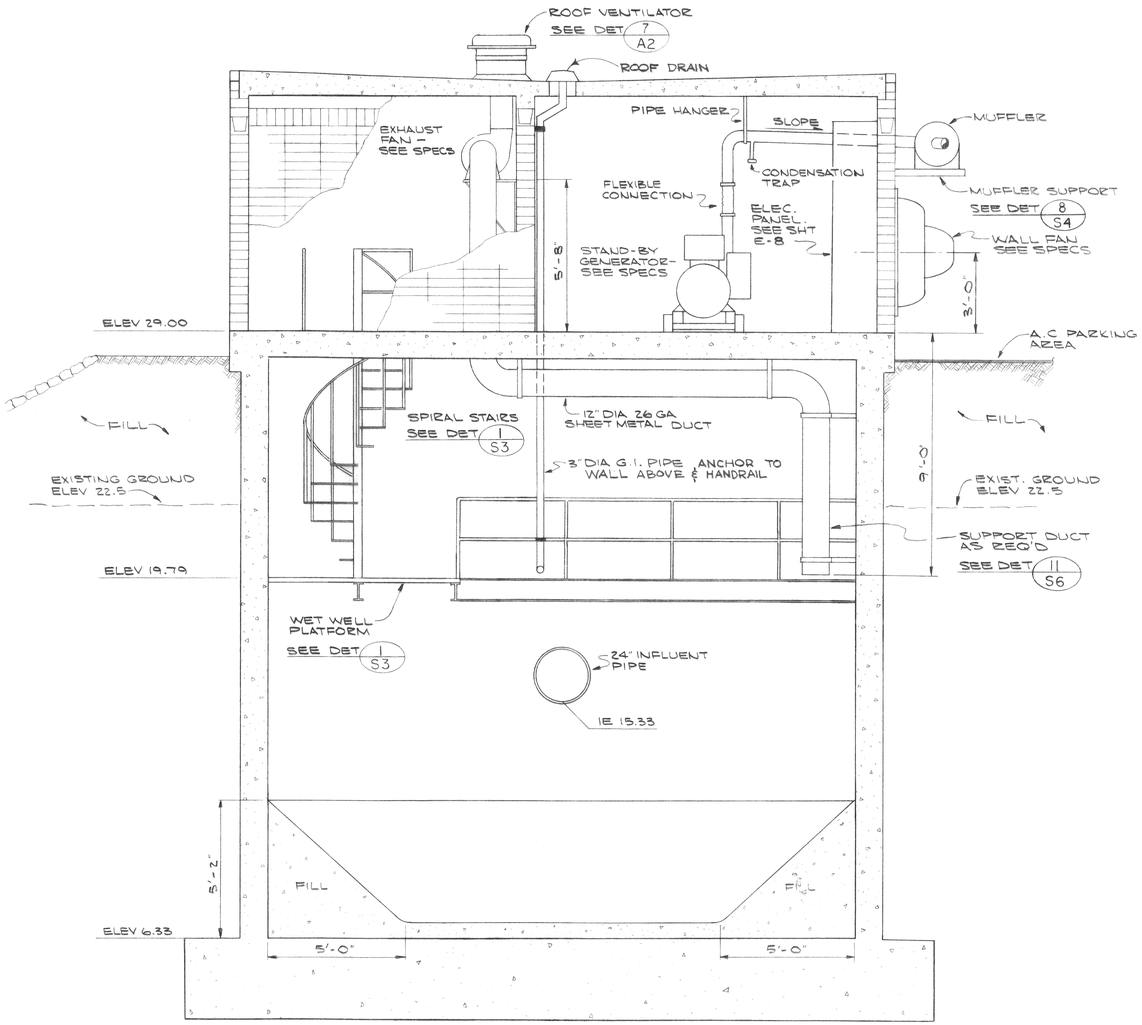

SECTION 1 / M3
SCALE 3/8"=1'-0"

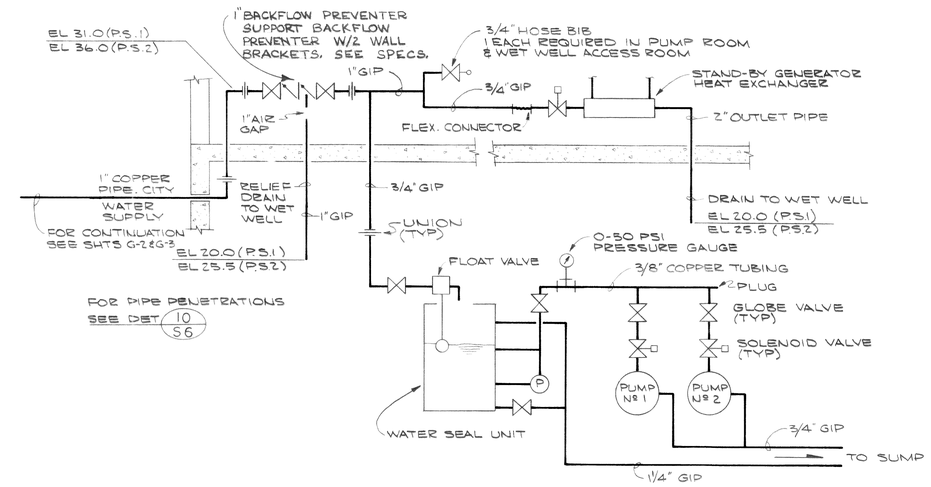

SCHEMATIC
SMALL PIPING
NO SCALE

NOTE: SUPPORT ALL SMALL PIPING FROM WALLS IN HORIZONTAL AND VERTICAL RUNS TO PREVENT SAG OR MOVEMENT.

FOR GAS PIPING SCHEMATIC SEE SHEET M8.

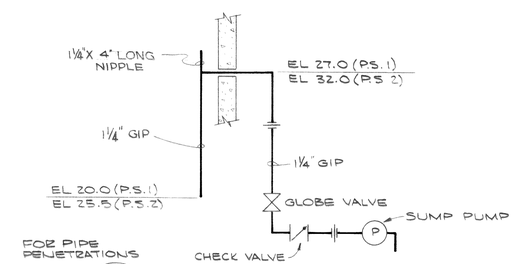

SCHEMATIC 2 / M4
SUMP DRAIN
NO SCALE

GRAPHIC SCALE
0 1 2 3 4 5 6 7 8 9 10
3/8"=1'-0"

TED STRICKLAND STATE OF WASHINGTON 9693 REGISTERED PROFESSIONAL ENGINEER

DATE	NO.	REVISION	BY

DESIGNED T.S. | DRAWN J.M.H. | CHECKED | APPROVED | SCALE AS SHOWN | DATE JULY, 1972 | FILE 71-S-425.002

Stevens, Thompson & Runyan, Inc.
Engineers/Planners
PORTLAND SEATTLE BOISE

TOWN OF FERNDALE, WASHINGTON
AXTON ROAD INTERCEPTOR
SCHEDULE I

PUMP STATION I
MECHANICAL SECTION

M5/8

MICROFILMED

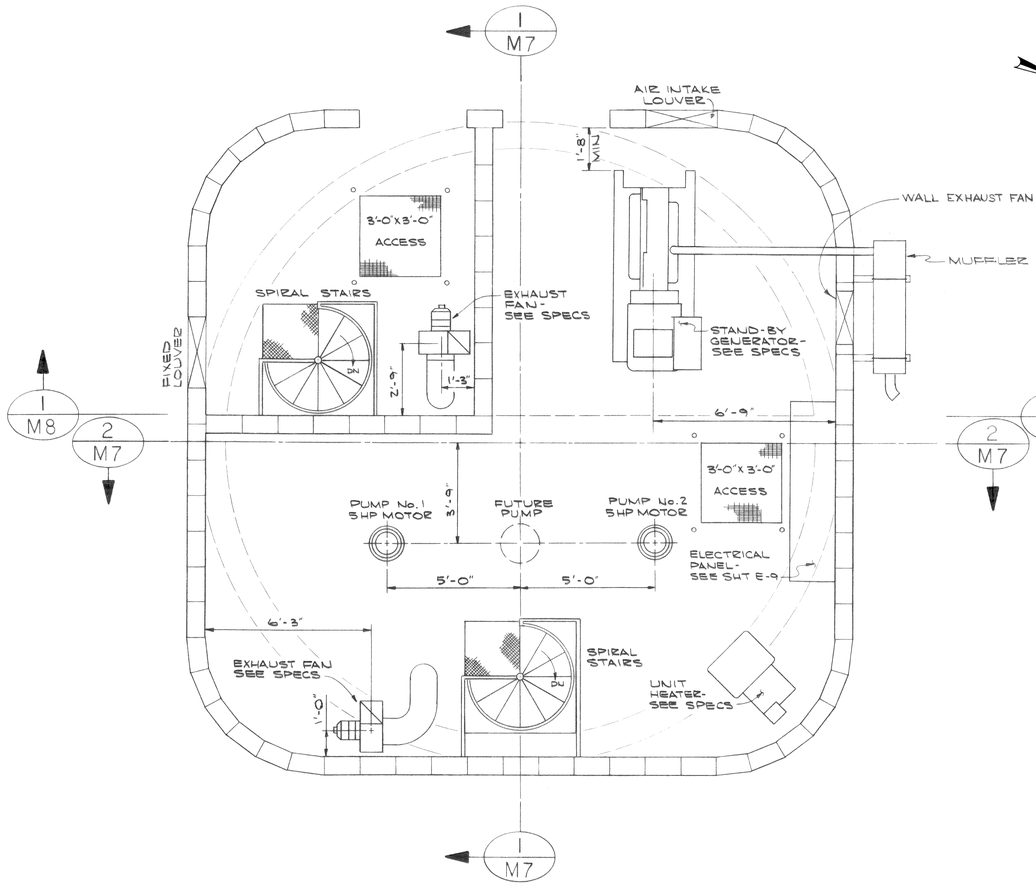

PLAN

MOTOR ROOM FLOOR

SCALE 3/8"=1'-0"

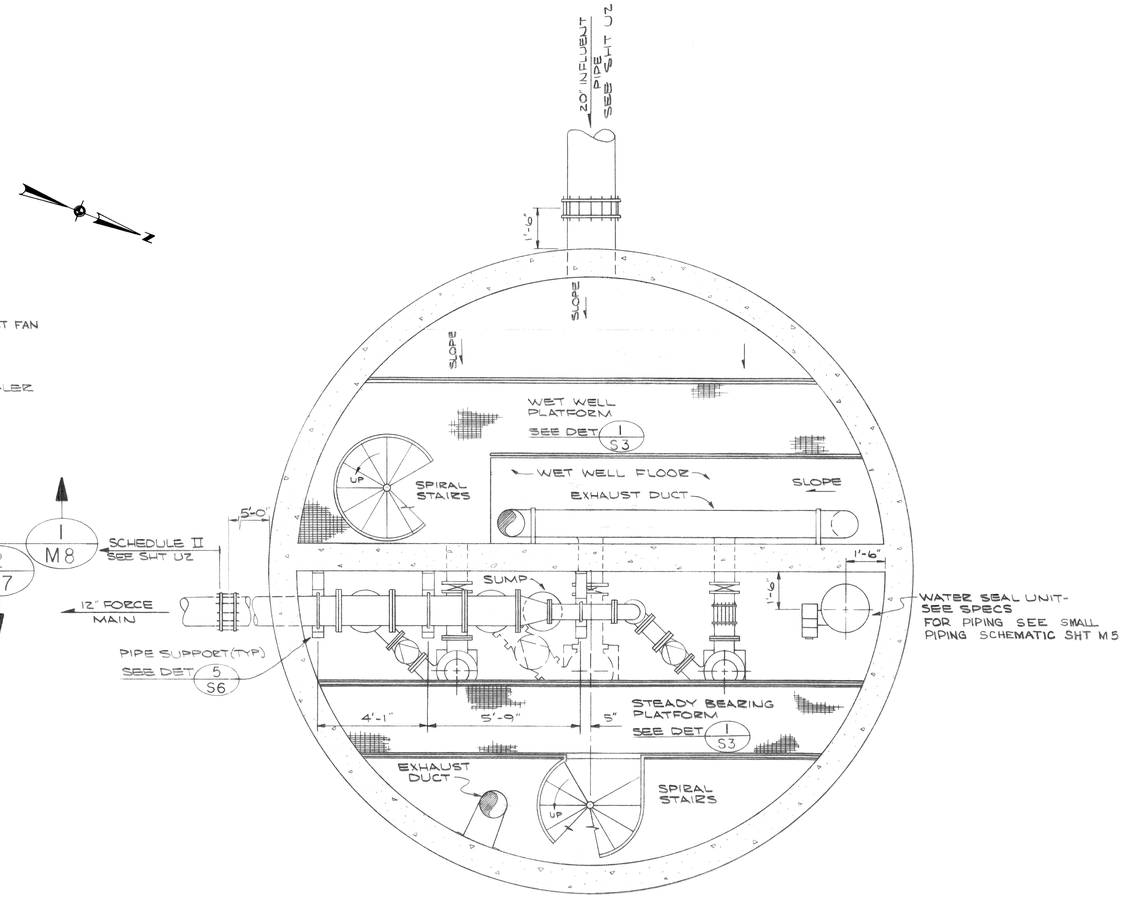

PLAN

PUMP ROOM & WET WELL

SCALE: 3/8"=1'-0"

GRAPHIC SCALE

0 1 2 3 4 5 6 7 8 9 10

3/8" = 1'-0"

DATE	NO.	REVISION	BY

DESIGNED T.S. | DRAWN J.M.H. | CHECKED | APPROVED | SCALE AS SHOWN | DATE JULY, 1972 | FILE 71-S-425.002

Stevens, Thompson & Runyan, Inc.
Engineers/Planners
PORTLAND SEATTLE BOISE

TOWN OF FERNDALE, WASHINGTON
AXTON ROAD INTERCEPTOR
SCHEDULE I

PUMP STATION 2
MECHANICAL PLANS

M6/8

MICROFILMED

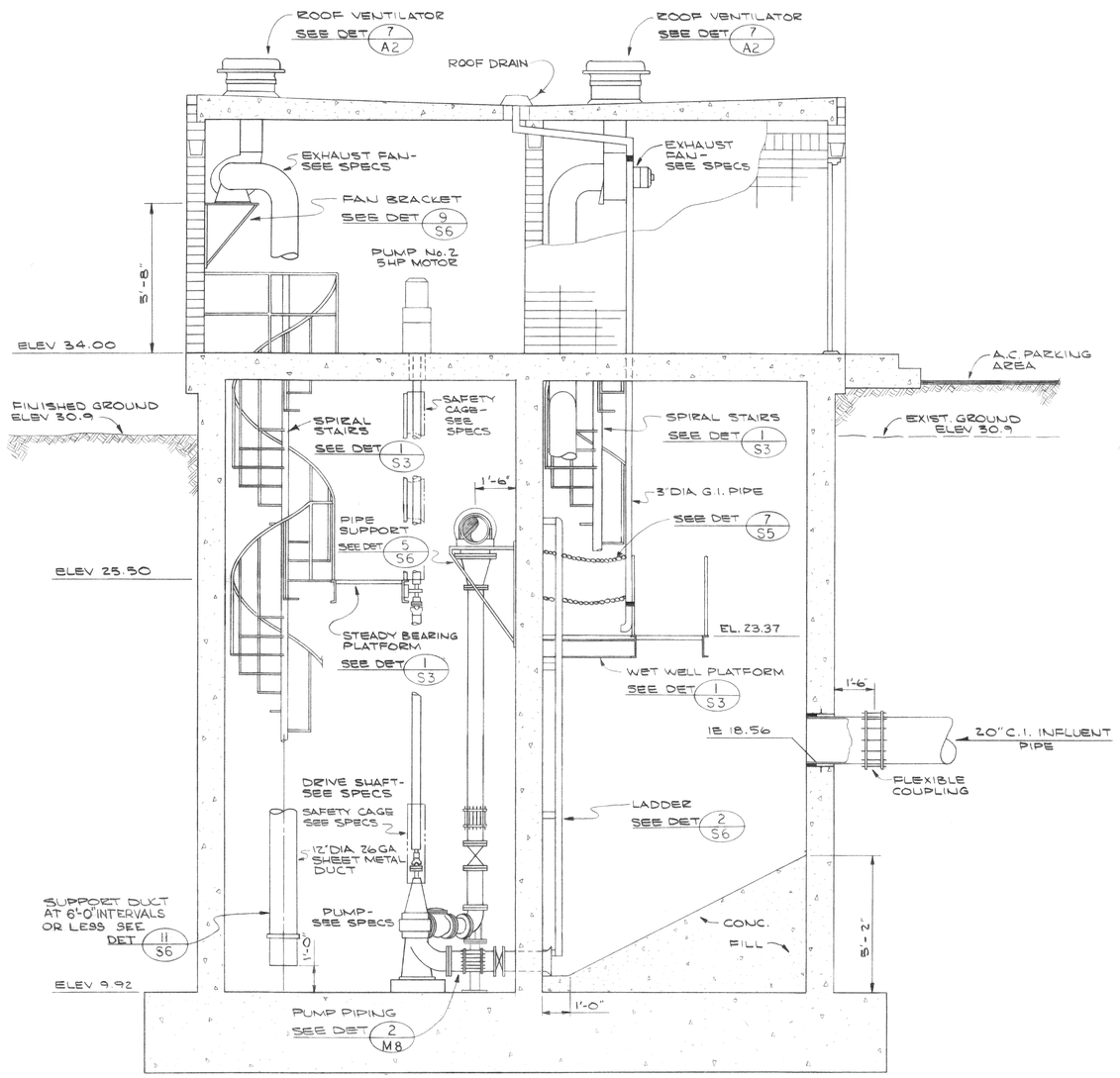

SECTION 1 / M6
SCALE: 3/8" = 1'-0"

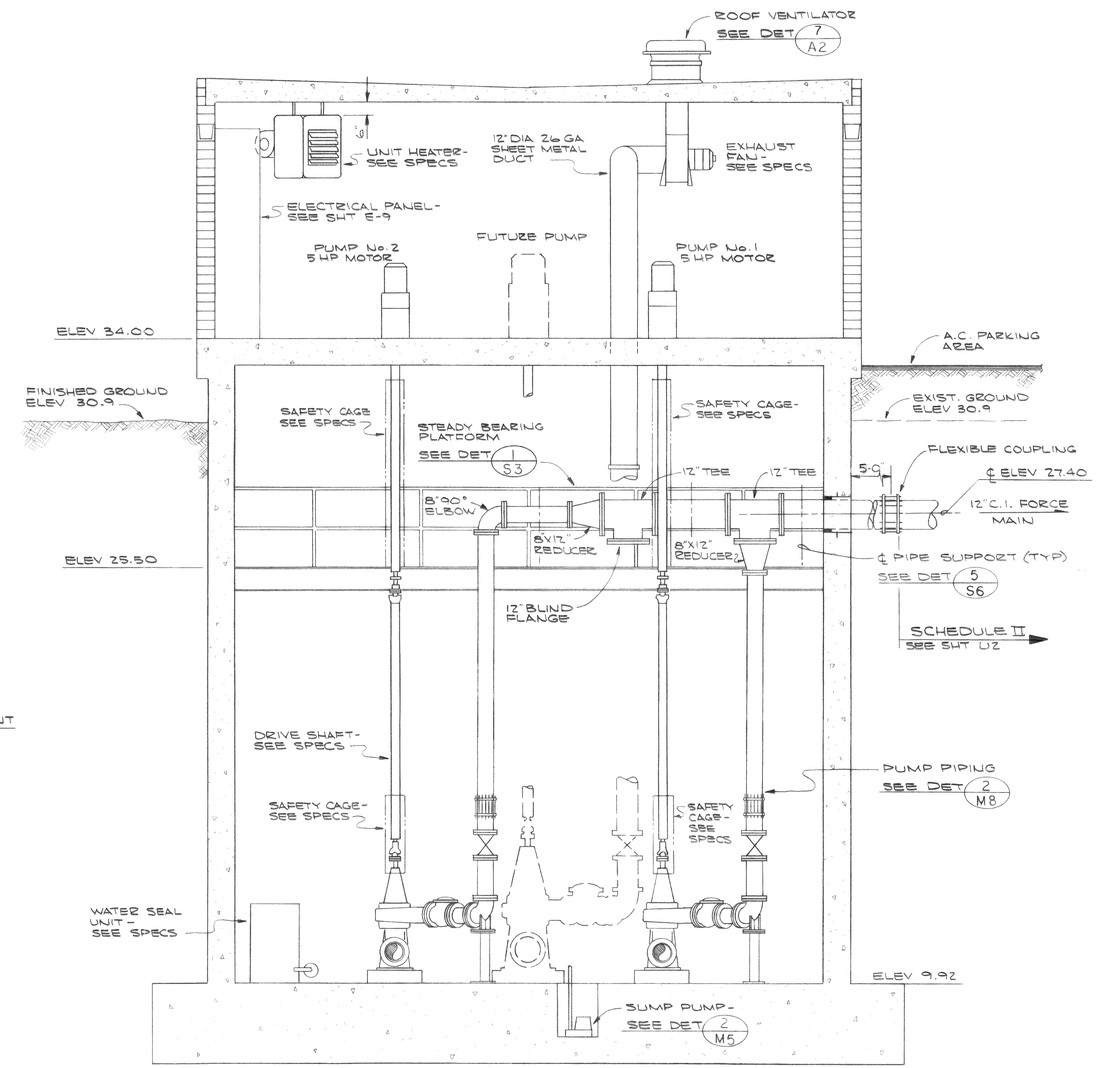

SECTION 2 / M6
SCALE: 3/8" = 1'-0"

GRAPHIC SCALE
0 1 2 3 4 5 6 7 8 9 10
3/8" = 1'-0"

DATE	NO.	REVISION	BY

DESIGNED T.S. | APPROVED Ted Strickling
DRAWN J.M.H. | SCALE AS SHOWN | DATE JULY, 1972
CHECKED | FILE 71-S-425.002

Stevens, Thompson & Runyan, Inc.
Engineers/Planners
PORTLAND SEATTLE BOISE

TOWN OF FERNDALE, WASHINGTON
AXTON ROAD INTERCEPTOR
SCHEDULE I

PUMP STATION 2
MECHANICAL SECTIONS

M7 / 8

MICROFILMED

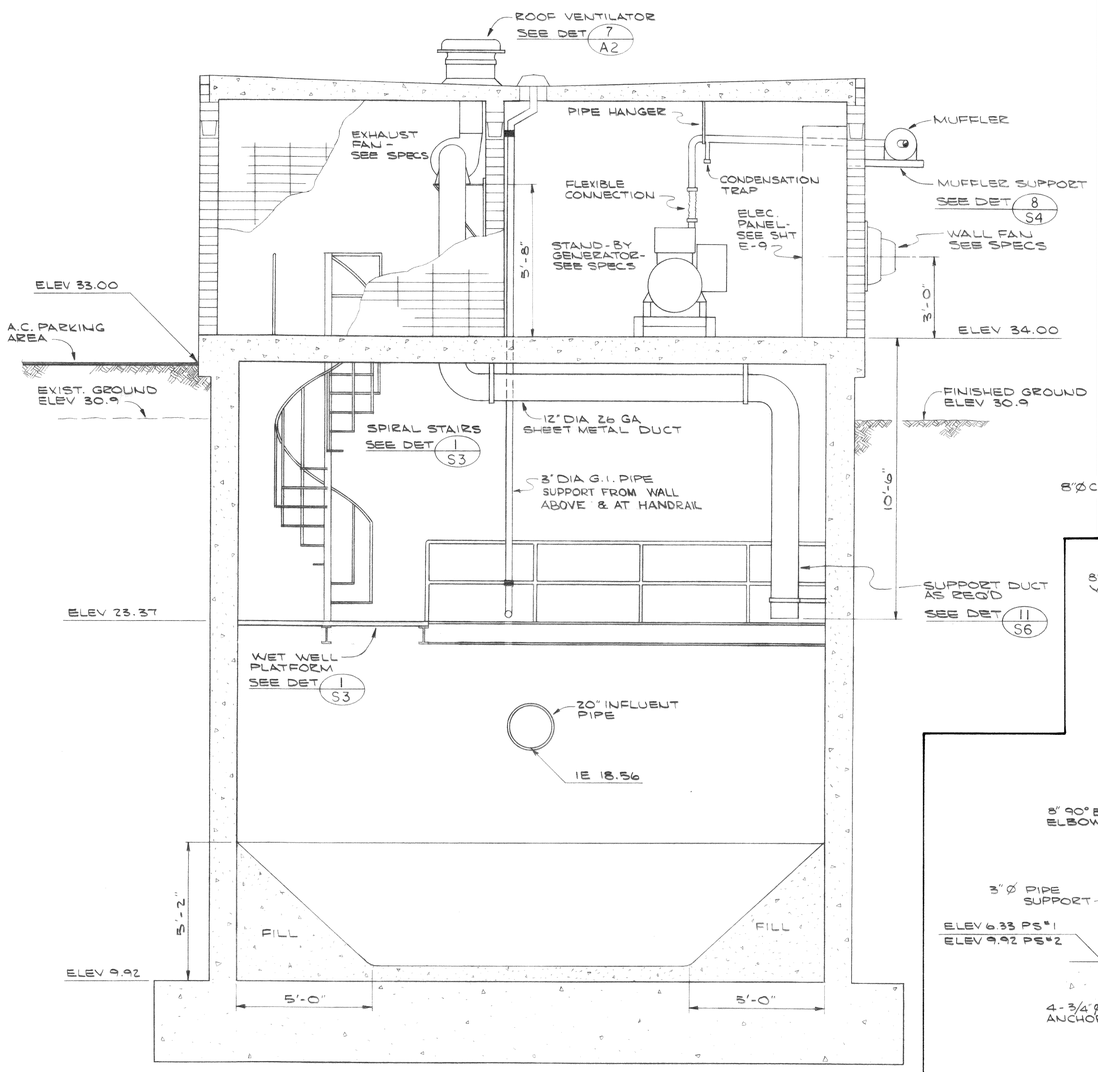

SECTION 1 / M6
SCALE: 3/8" = 1'-0"

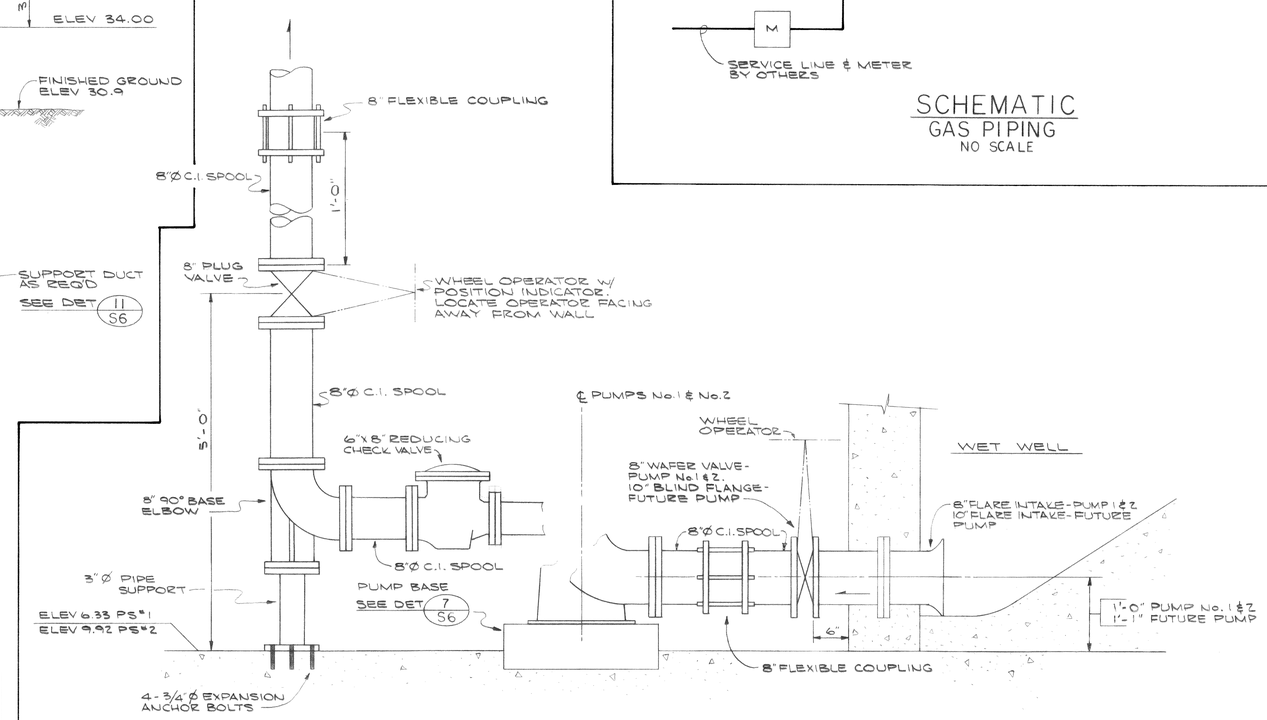

DETAIL 2 / M4
PUMP PIPING
(DEVELOPED VIEW)
NO SCALE

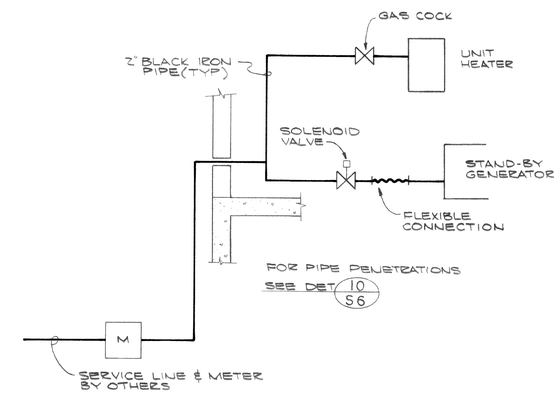

SCHEMATIC
GAS PIPING
NO SCALE

GRAPHIC SCALE
0 1 2 3 4 5 6 7 8 9
3/8" = 1'-0"

DATE	NO.	REVISION	BY

DESIGNED T.S. | APPROVED Ted Stricklin
DRAWN J.M.H. | SCALE AS SHOWN | DATE JULY, 1972
CHECKED LHB | FILE 71-S-425.002

Stevens, Thompson & Runyan, Inc.
Engineers / Planners
PORTLAND SEATTLE BOISE

TOWN OF FERNDALE, WASHINGTON
AXTON ROAD INTERCEPTOR
SCHEDULE I

PUMP STATION 2
MECHANICAL SECTIONS

M8 / 8

MICROFILMED

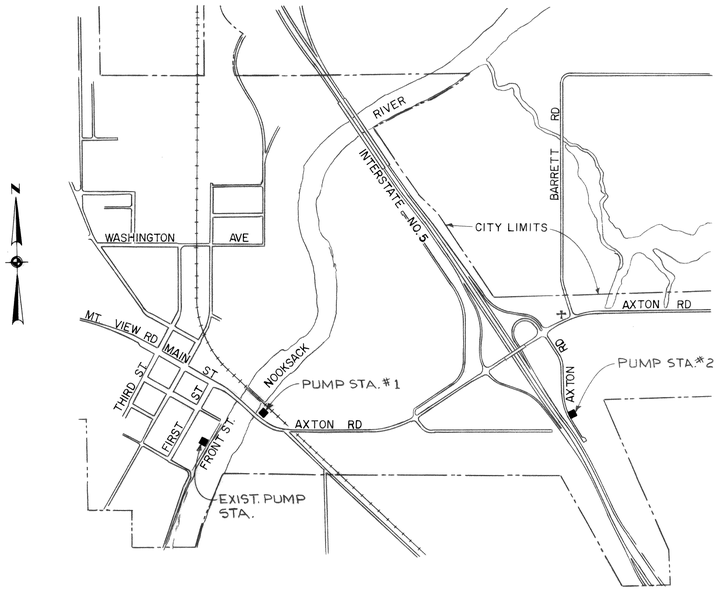

VICINITY MAP

800 400 0 800

GRAPHIC SCALE IN FEET

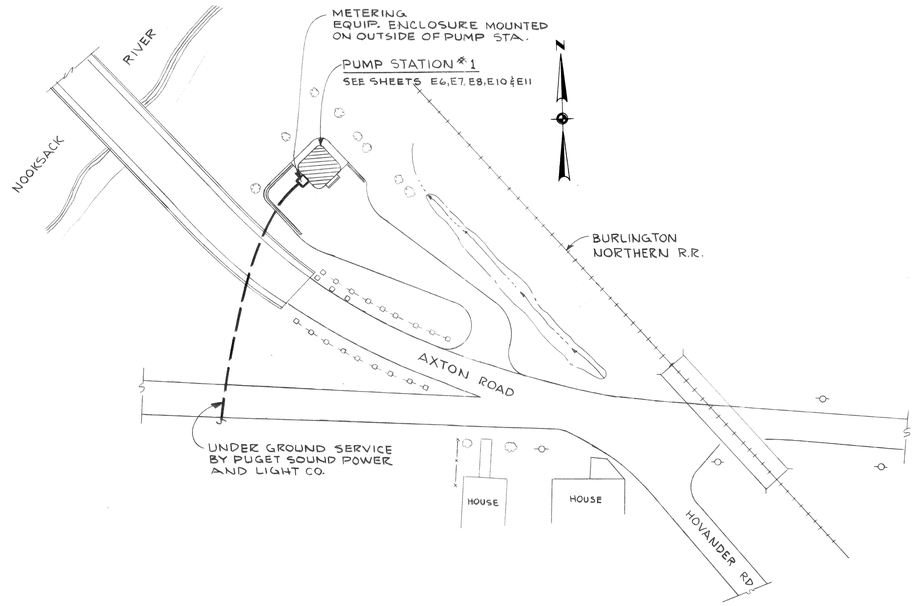

SITE PLAN - PUMP STATION #1

SCALE 1" = 50'

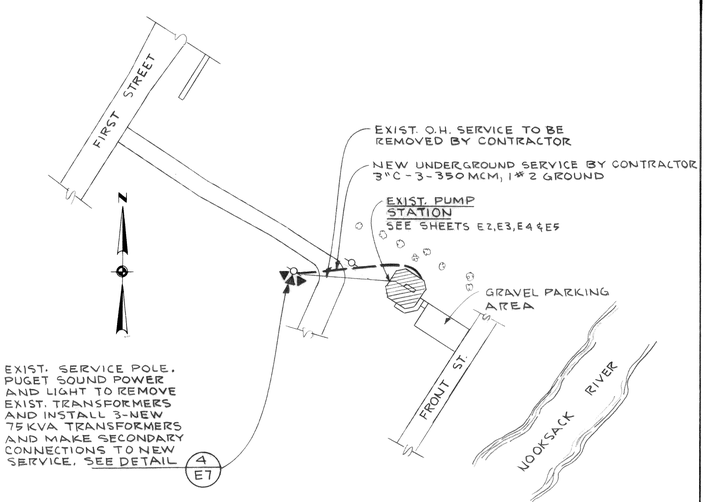

SITE PLAN - EXIST. PUMP STATION

SCALE 1" = 50'

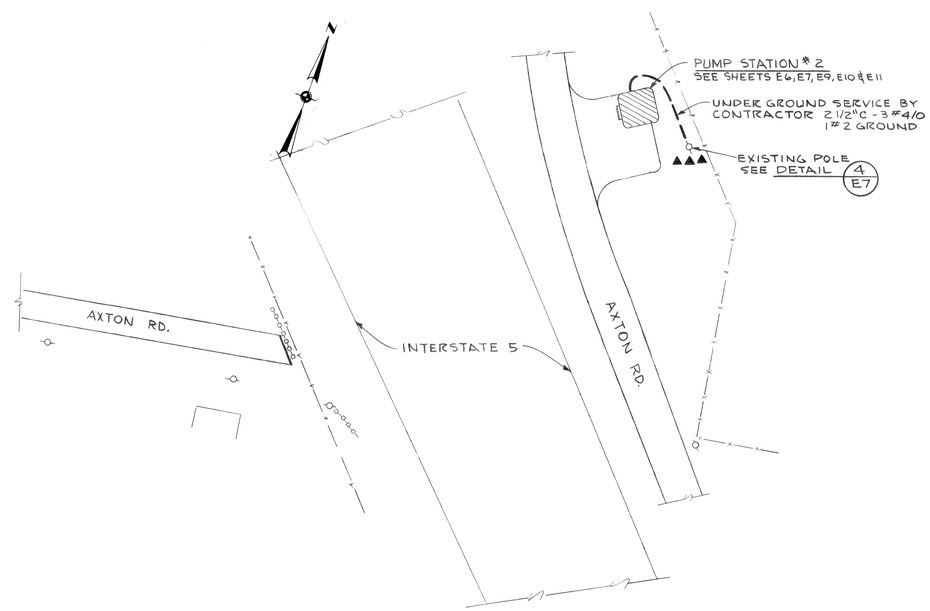

SITE PLAN - PUMP STATION # 2

SCALE 1" = 50'

LEGEND

- (2) CEILING OR PENDANT FIXTURE OUTLET
- (3) WALL FIXTURE OUTLET
- (1) FLUORESCENT FIXTURE OUTLET

NUMERAL DENOTES FIXTURE NUMBER

- DUPLEX 15A-125A-2P-3W RECEPT.
- GROUND ROD
- S SINGLE POLE SWITCH
- (J) JUNCTION BOX, WALL OR CEILING, 4" OCTAGON UNLESS NOTED.
- LIGHTING AND APPLIANCE PANEL BOARD
- BRANCH CIRCUIT OR FEEDER EXPOSED W/ GENERAL ROUTE INDICATED.
- BRANCH CIRCUIT OR FEEDER IN OR UNDER FLOOR
- BRANCH CIRCUIT OR FEEDER IN WALL OR CEILING.
- B-2,4,6 HOME RUN TO PANEL, W/PANEL LETTER & CIRCUIT NUMBER INDICATED. CROSSBARS DENOTES NO. OF CONDUCTORS NO CROSSBARS INDICATE 2 CONDUCTORS
- FLEXIBLE CONDUIT
- CONDUIT SEAL
- CONDUIT DOWN
- CONDUIT UP
- STO MANUAL MOTOR STARTER WITH THERMAL OVERLOAD.
- SL SELECTOR SWITCH
- SV SOLENOID VALVE
- (T) THERMOSTAT
- TELEPHONE OUTLET
- (M)10 MOTOR, HP INDICATED
- SPECIALIZED LEGEND FOR MODIFICATIONS TO EXISTING PUMP STATION IS LOCATED ON THE SHEETS DEPICTING THE WORK.
- TRANSFORMERS MOUNTED ON POLE

SUBSCRIPT - ADDED TO ANY SYMBOL DENOTES:
EX - EXPLOSION PROOF, CLASS & GROUP AS NOTED
WP - WEATHERPROOF, NEMA 4 OR EQUIV.
+48 - MOUNTING HEIGHT IN INCHES ABOVE FLOOR.
P - PILOT LIGHT

ROBERT J. CASTLE — STATE OF WASHINGTON — REGISTERED PROFESSIONAL ENGINEER

DATE	NO.	REVISION	BY

DESIGNED R.J.C. | APPROVED | DRAWN J.M. | SCALE AS SHOWN | DATE JULY, 1972 | CHECKED | FILE 71-S-425.002

Stevens, Thompson & Runyan, Inc.
Engineers / Planners
PORTLAND SEATTLE BOISE

TOWN OF FERNDALE, WASHINGTON
AXTON ROAD INTERCEPTOR
SCHEDULE I

VICINITY MAP AND SITE PLAN
ELECTRICAL

E1 / 11

MICROFILMED

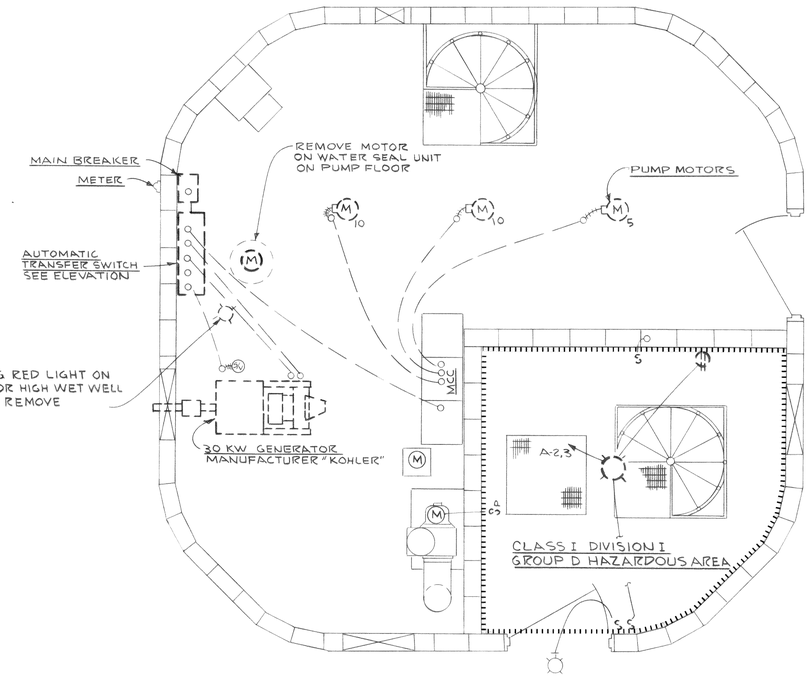

MOTOR FLOOR PLAN
SCALE: 3/8" = 1'-0"
EXISTING PUMP STATION

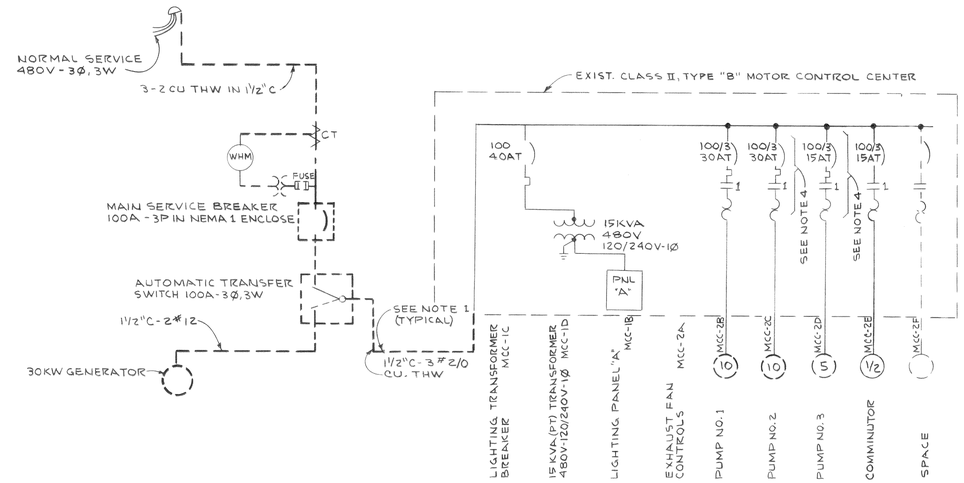

ONE LINE DIAGRAM
OF EXISTING CONFIGURATION

LEGEND

LIGHT LINE - EXISTING TO REMAIN
DASHED LINE - EXISTING EQUIP. TO BE REMOVED
EXISTING CIRCUITS CAST IN CONCRE
SEE NOTE 1

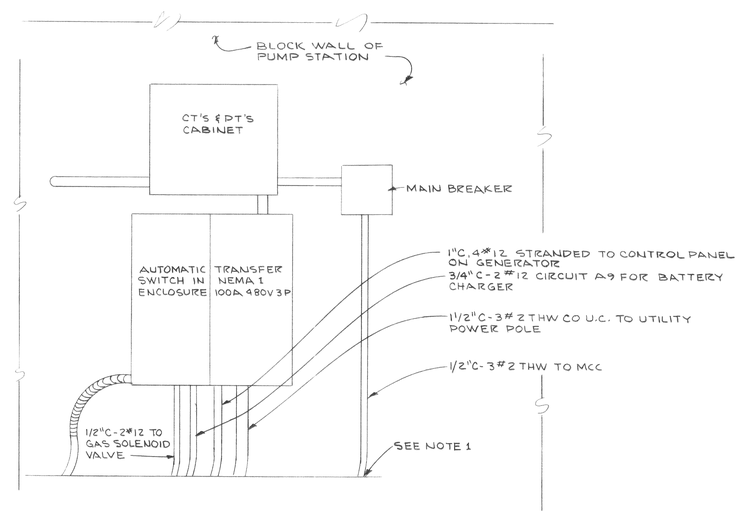

ELEVATION (B)
NO SCALE

EQUIPMENT TO BE REMOVED (SEE NOTE 3)

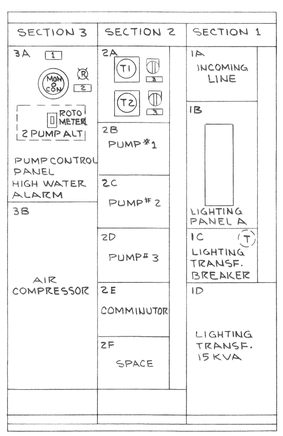

EXISTING MOTOR CONTROL CENTER
SCALE 3/4" = 1'-0"

NOTE:

RE-USE EXISTING MOTOR CONTROL CENTER WITH THE FOLLOWING MODIFICATIONS:
SECTION 1 RE-USE AS IS
SECTION 2 RE-USE STARTERS AND BREAKERS IN 2C & 2D AS INDICATED ON SHEET E4
SECTION 3 MODIFY CONTROL CIRCUITS AS INDICATED ON SHEET E5

NOTES:

1. REMOVE CONDUCTORS FROM CONDUITS, WHERE EQUIPMENT HAS BEEN REMOVED. WHERE CONDUIT STUBS UP EXPOSED, CUT OFF FLUSH WITH FLOOR. (TYP.)
2. EXISTING MOTOR CONTROL CENTER IS AS MANUFACTURED BY SQUARE D.
3. ALL HOLES IN BLOCK WALLS AND FLOORS LEFT WHEN EQUIPMENT HAS BEEN REMOVED SHALL BE GROUTED IN.
4. RE-USE EXISTING EQUIPMENT AS INDICATED ON SHEEET E4.

ROBERT J. CASTLE
STATE OF WASHINGTON
REGISTERED PROFESSIONAL ENGINEER

DATE	NO.	REVISION	BY

DESIGNED R.J.C. | APPROVED
DRAWN J.M. | SCALE AS SHOWN | DATE JULY, 1972
CHECKED | FILE 71-S-425.002

Stevens, Thompson & Runyan, Inc.
Engineers/Planners
PORTLAND SEATTLE BOISE

TOWN OF FERNDALE, WASHINGTON
AXTON ROAD INTERCEPTOR
SCHEDULE I

EXISTING PUMP STATION
EQUIPMENT REMOVAL

E2/11

MICROFILMED

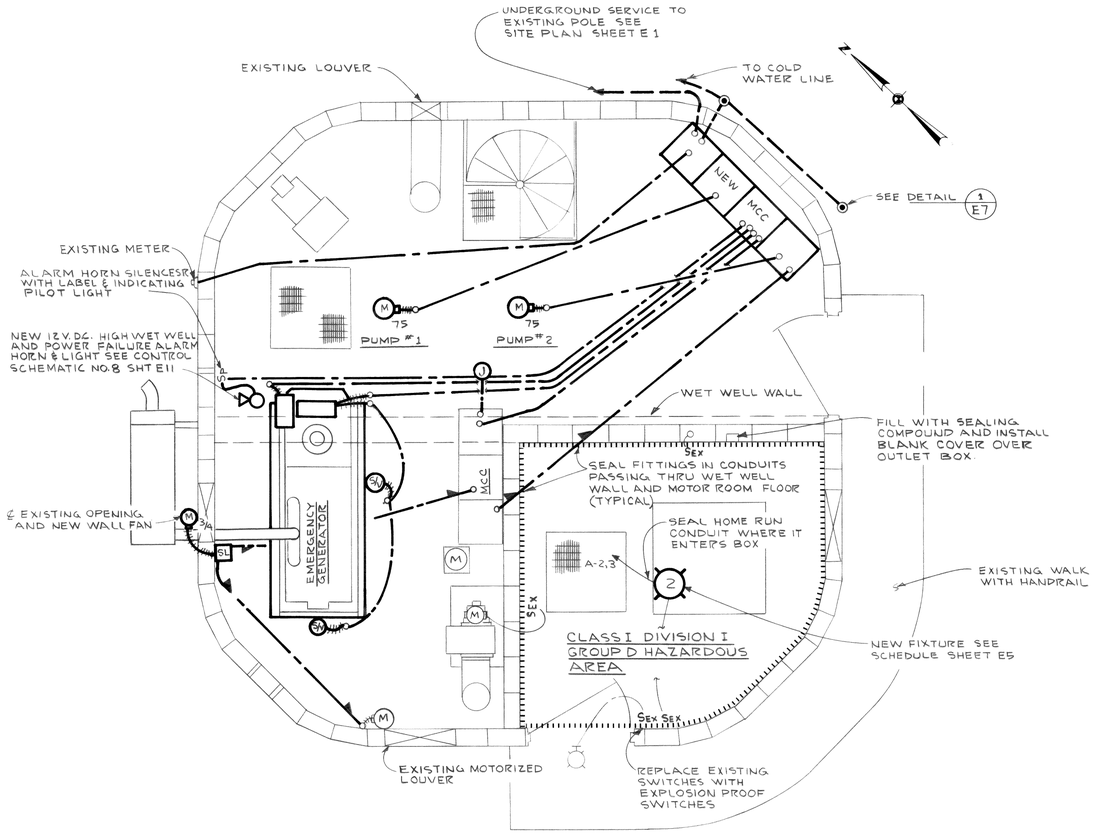

MOTOR FLOOR PLAN

SCALE 3/8" = 1'-0"

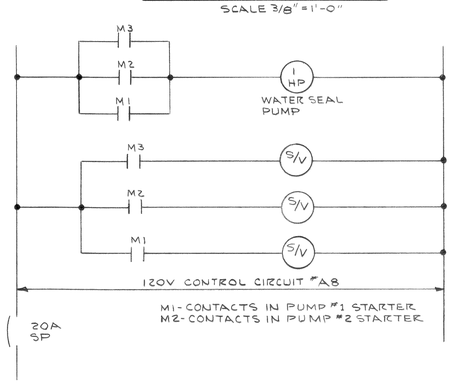

EXISTING WATER SEAL PUMP WIRING

FOR REFERENCE ONLY

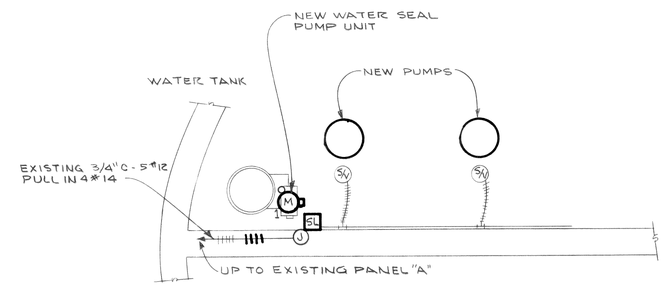

PART PLAN - PUMP FLOOR

SCALE 3/8" = 1'-0"

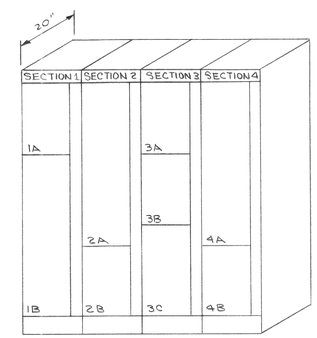

MOTOR CONTROL CENTER

SCALE 1/2" = 1'-0"

MCC NAMEPLATE ENGRAVING SCHEDULE			
UNIT NO.	NAMEPLATE ENGRAVING SIZE 1" X 2 1/2" 16 CHARACTERS PER LINE MAX		
	FIRST LINE	SECOND LINE	THIRD LINE
1A	MAIN BREAKER		
1B	METERING CT'S & PT'S		
2A	PUMP # 1		
2B			
3A	AUTOMATIC	TRANSFER SWITCH	CONTROL PANEL
3B	AUTOMATIC	TRANSFER SWITCH	
3C	GENERATOR	BREAKER	
4A	PUMP # 2		
4B	FEEDER TO MOTOR	CONTROL CENTER	

LEGEND

LIGHT LINE - EXISTING TO REMAIN
SOLID HEAVY LINE - NEW WORK
NEW CONDUIT AND WIRING ROUTED BELOW MOTOR ROOM FLOOR SLAB.

NOTES:

FOR CONDUIT PENETRATION SEE DETAIL 10/S6

ROBERT J. CASNER STATE OF WASHINGTON REGISTERED PROFESSIONAL ENGINEER

DATE	NO.	REVISION	BY

DESIGNED R.J.C. | APPROVED | DRAWN J.M. | SCALE AS SHOWN | DATE JULY, 1972 | CHECKED | FILE 71-S-425.002

Stevens, Thompson & Runyan, Inc.
Engineers/Planners
PORTLAND SEATTLE BOISE

TOWN OF FERNDALE, WASHINGTON
AXTON ROAD INTERCEPTOR
SCHEDULE I

EXISTING PUMP STATION
EQUIPMENT INSTALLATION

E3/11

MICROFILMED

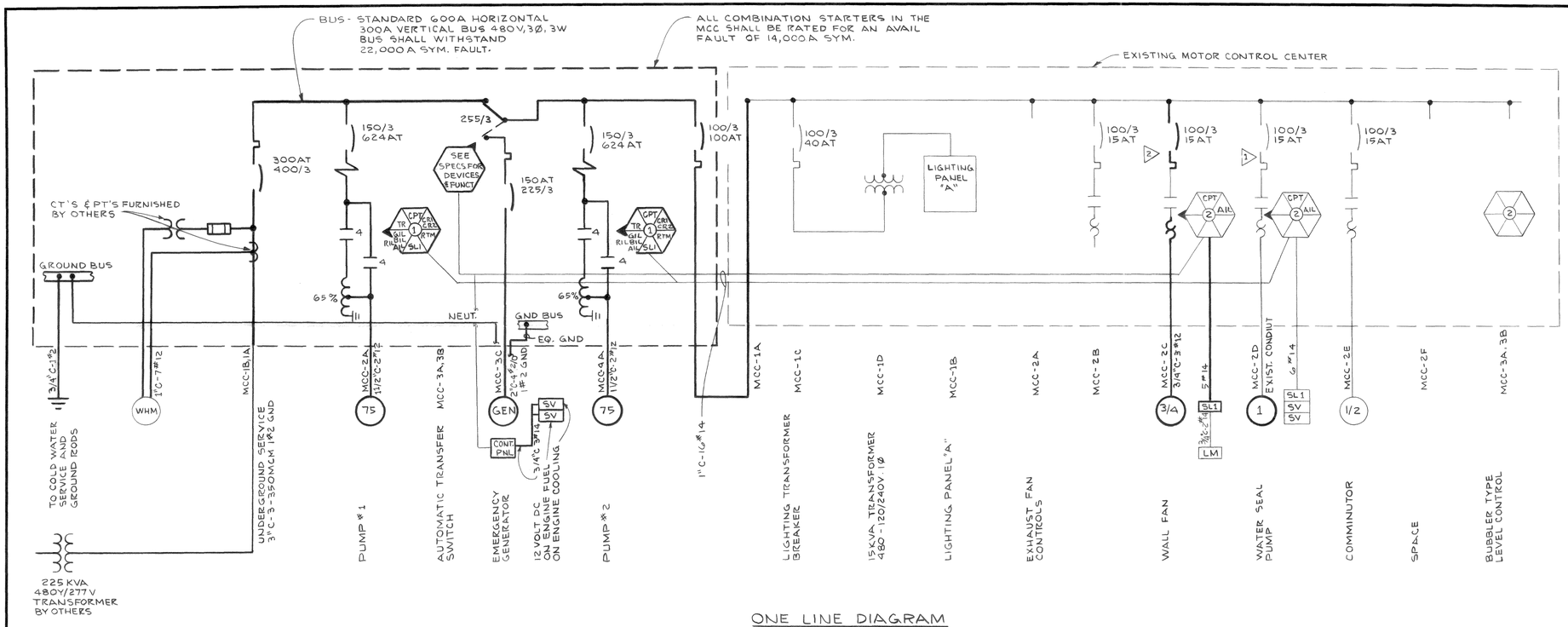

ONE LINE DIAGRAM

NOTES:

1. REUSE EXIST. PUMP # 3 COMBINATION STARTER FOR NEW WATER SEAL UNIT
2. REUSE EXIST. PUMP # 2 COMBINATION STARTER FOR THE NEW EXHAUST FAN - REPLACE THE EXIST. 30A BREAKER WITH 15A BREAKER.

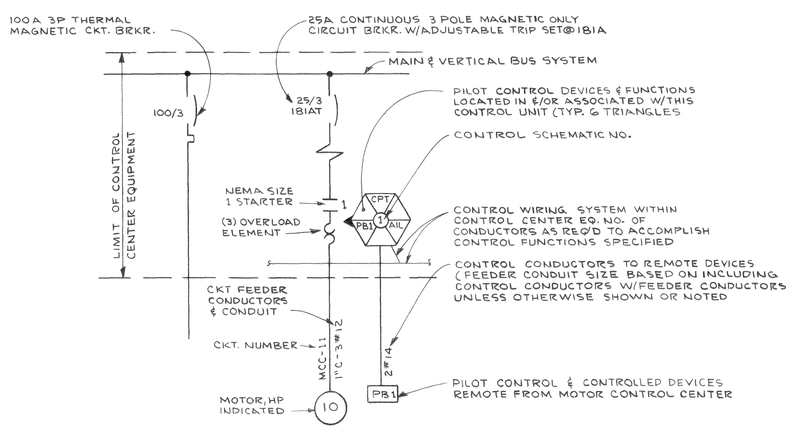

TYPICAL ONE LINE DIAGRAM SYMBOLS

CONTROL KEY

CPT	- CONTROL POWER TRANSFORMER
AIL	- AMBER INDICATING LIGHT
BIL	- BLUE INDICATING LIGHT
GIL	- GREEN INDICATING LIGHT
RIL	- RED INDICATING LIGHT
CR1,2,ETC.	- CONTROL RELAY FOR FUNCTION DETAILD
RTM	- RUNNING TIME METER
SL1	- LEAD-LAG PUMP SELECTOR SWITCH
TC1,2	- TIME CLOCK
TR	- TIMING RELAY
ULM	- ULTRASONIC LEVEL MONITOR
ULS	- ULTRASONIC LEVEL SENSOR
ALT	- ALTERNATOR
LM	- LOUVER MOTOR

MICROFILMED

ROBERT J. CASNE STATE OF WASHINGTON REGISTERED PROFESSIONAL ENGINEER

DATE	NO.	REVISION	BY

DESIGNED R.J.C. | DRAWN J.M. | CHECKED | APPROVED | SCALE NONE | DATE JULY, 1972 | FILE 71-S-425.002

Stevens, Thompson & Runyan, Inc.
Engineers/Planners
PORTLAND SEATTLE BOISE

TOWN OF FERNDALE, WASHINGTON
AXTON ROAD INTERCEPTOR
SCHEDULE I

EXISTING PUMP STATION NEW WORK
ELECTRICAL ONE LINE DIAGRAM

E4/11

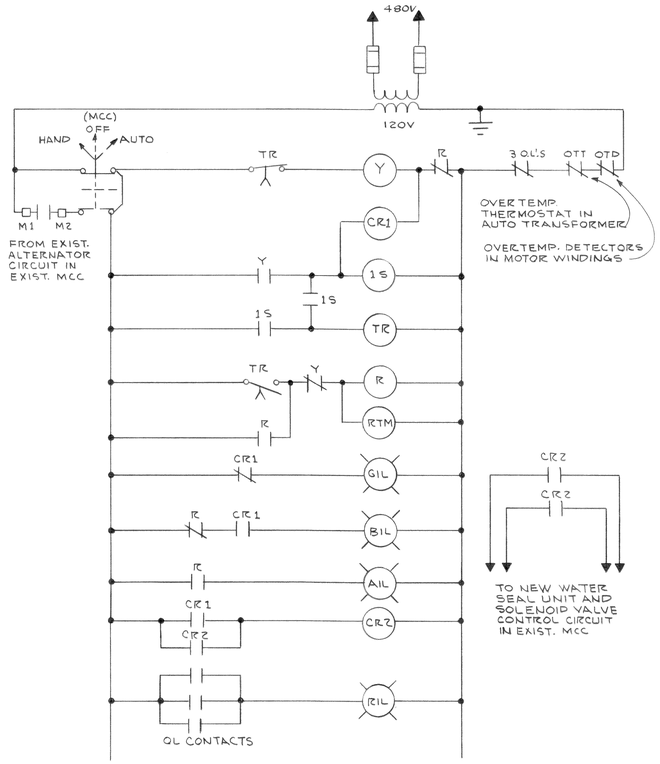

CONTROL SCHEMATIC NO. 1
AUTOTRANSFORMER STARTER

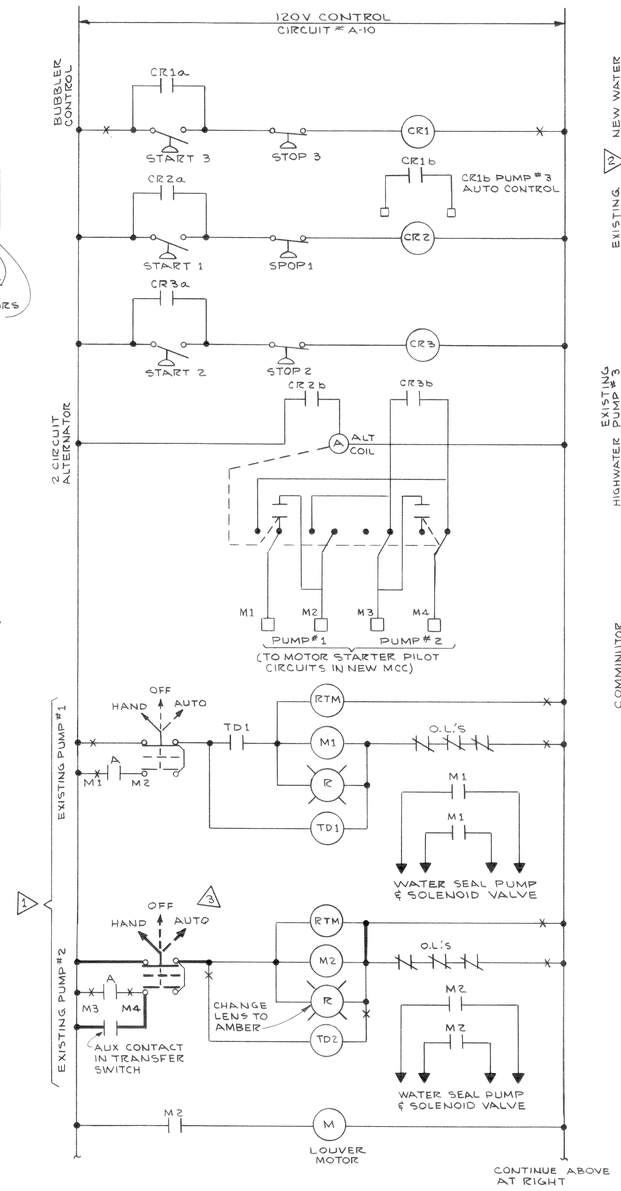

CONTROL SCHEMATIC NO. 2
MODIFICATION OF EXISTING CONTROL SCHEMATIC

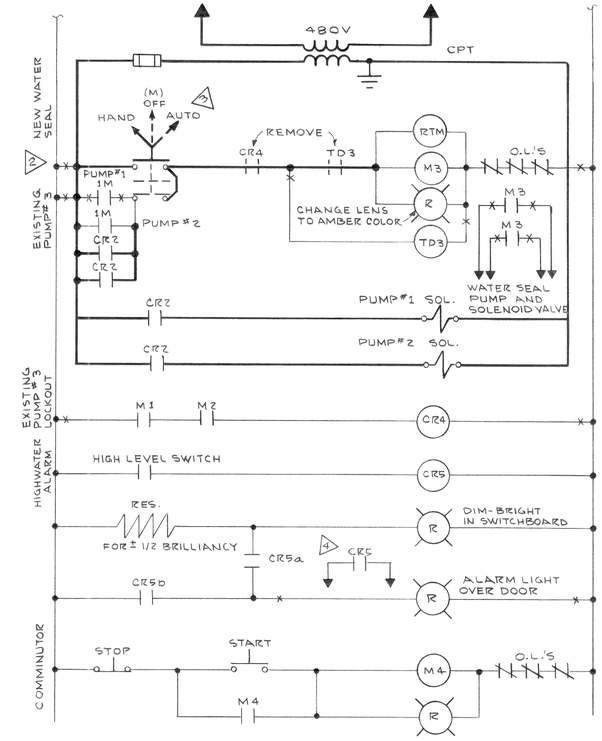

LEGEND

- LIGHT LINE - EXISTING TO REMAIN
- HEAVY SOLID LINE - NEW WORK

NOTES:

1. DISCONNECT EXISTING CONTROLS FOR EXISTING PUMP # 1 & # 2 AS SHOWN - DISCONNECT WIRE WHERE INDICATED BY X.
2. RE-USE EXISTING PUMP # 3 CONTROLS AS MODIFIED FOR THE NEW WATER SEAL UNIT.
3. REMOVE EXISTING SL1 IN MCC AND INSTALL NEW SL1 AT MOTOR.
4. TO ALARM HORN AND LIGHT SEE CONTROL SCHEMATIC NO. 8 SHEET E 11

DATE	NO.	REVISION	BY		
				DESIGNED R.J.C.	APPROVED Richard Kamer
				DRAWN J.M.	SCALE NONE / DATE JULY, 1972
				CHECKED RJC	FILE 71-S-425.002

Stevens, Thompson & Runyan, Inc.
Engineers/Planners
PORTLAND SEATTLE BOISE

TOWN OF FERNDALE, WASHINGTON
AXTON ROAD INTERCEPTOR
SCHEDULE I

EXISTING PUMP STATION
ELECTRICAL CONTROL SCHEMATICS

E5 / 11

MICROFILMED

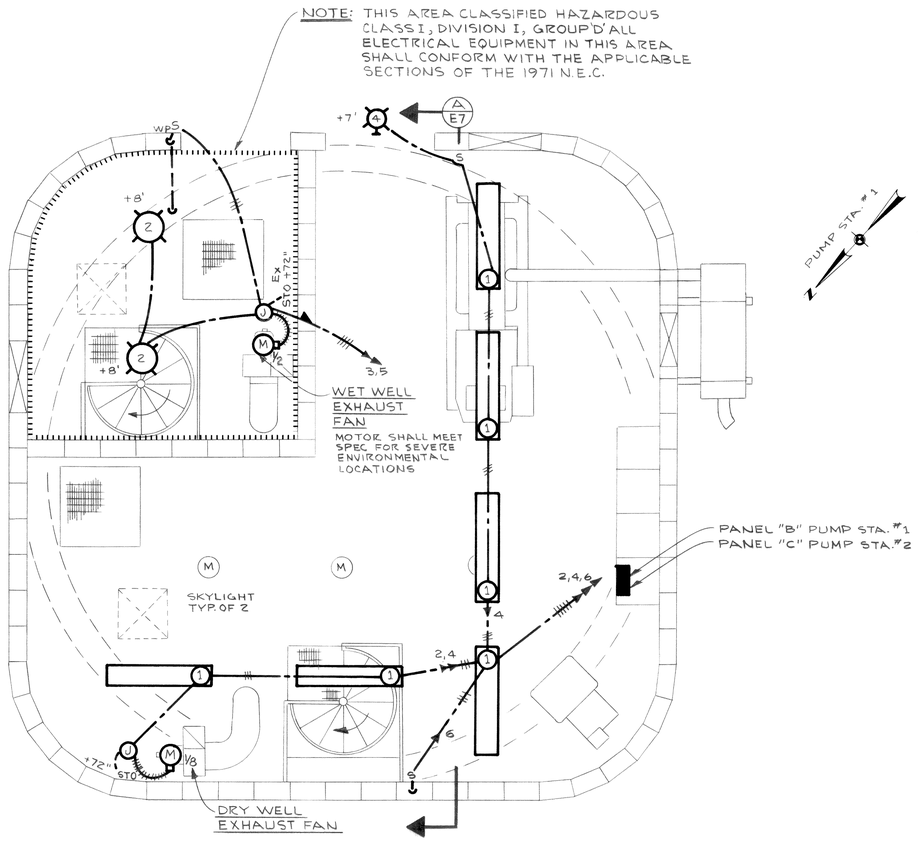

MOTOR FLOOR PLAN

SCALE: 3/8" = 1'-0"

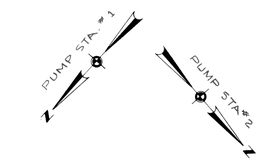

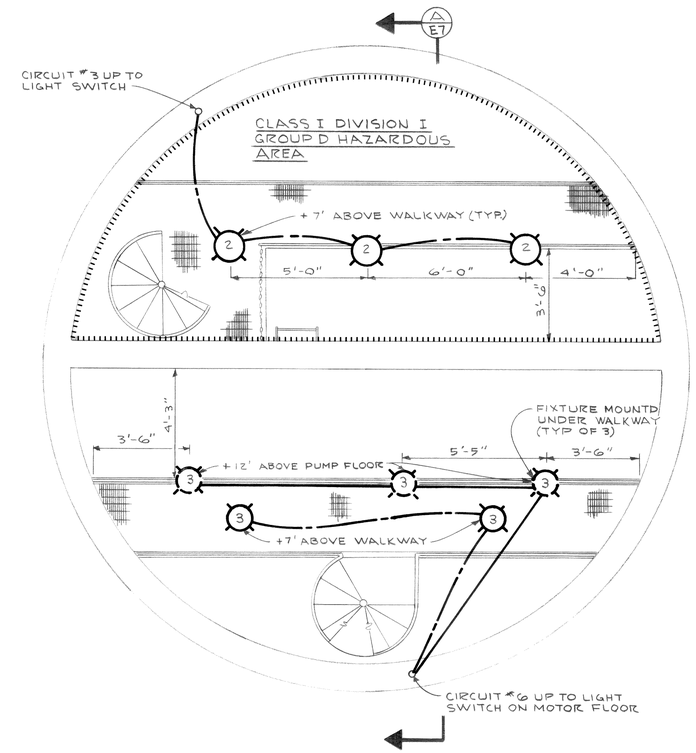

PUMP FLOOR PLAN

SCALE 3/8" = 1'-0"

LIGHTING FIXTURE SCHEDULE

FIXT NO.	MANUFACTURER	CATALOG NUMBER	LAMP QTY	LAMP TYPE	MOUNTING C	MOUNTING R	MOUNTING W	MOUNTING P	REMARKS
1	HOLOPHANE	7200-4-LT-120	2	F40T12/RS	●				
2	CROUSE-HINDS	EVA 2015	1	A-23-200WIF				●	USE EXTENED SERVICE LAMP
3	HOLOPHANE	904-120	1	H39-22KC/DX				●	
4	HOLOPHANE	412-120-PR	1	H38-4JA/DX			●		

C-CEILING P-PENDANT (MOUNTING HIGHT TO BOTTOM OF FIXTURE
R-RECESSED W-WALL OR BRAKET (MOUNTING HIGHT SHOWN ON PLAN)

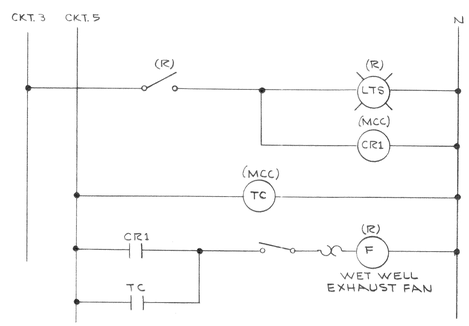

CONTROL SCHEMATIC NO. 7

LIGHTING & EXHAUST FAN WIRING DIAGRAM

NOTE: SHOWN FOR WET WELL EXHAUST FAN. DRY WELL EXHAUST FAN SHALL BE SIMILAR.

PANEL SCHEDULE

PANEL	VOLTS	MAIN LUG RATING	MOUNTING	CKT. NO.	BRANCH CKT BRKR RATING	NO. OF ACTIVE CKTS	NO. OF SPARE CKTS	REMARKS
B	208Y/120V 3Ø, 4W	50	IN MCC	1-3, 6, 10	15/1	5	0	
				4,5,7,8,9,11-15	20/1	6	4	
C	208Y/120V 3Ø, 4W	50	IN MCC	1-3, 6, 10	15/1	5	0	
				4,5,7,8,9,11-15	20/1	6	4	

DATE	NO.	REVISION	BY

DESIGNED R.J.C. APPROVED
DRAWN J.M. SCALE AS SHOWN DATE JULY, 1972
CHECKED FILE 71-S-425.002

Stevens, Thompson & Runyan, Inc.
Engineers/Planners
PORTLAND SEATTLE BOISE

TOWN OF FERNDALE, WASHINGTON
AXTON ROAD INTERCEPTOR
SCHEDULE I

PUMP STATION 1 AND 2
ELECTRICAL LIGHTING PLAN

E6/11

MICROFILMED

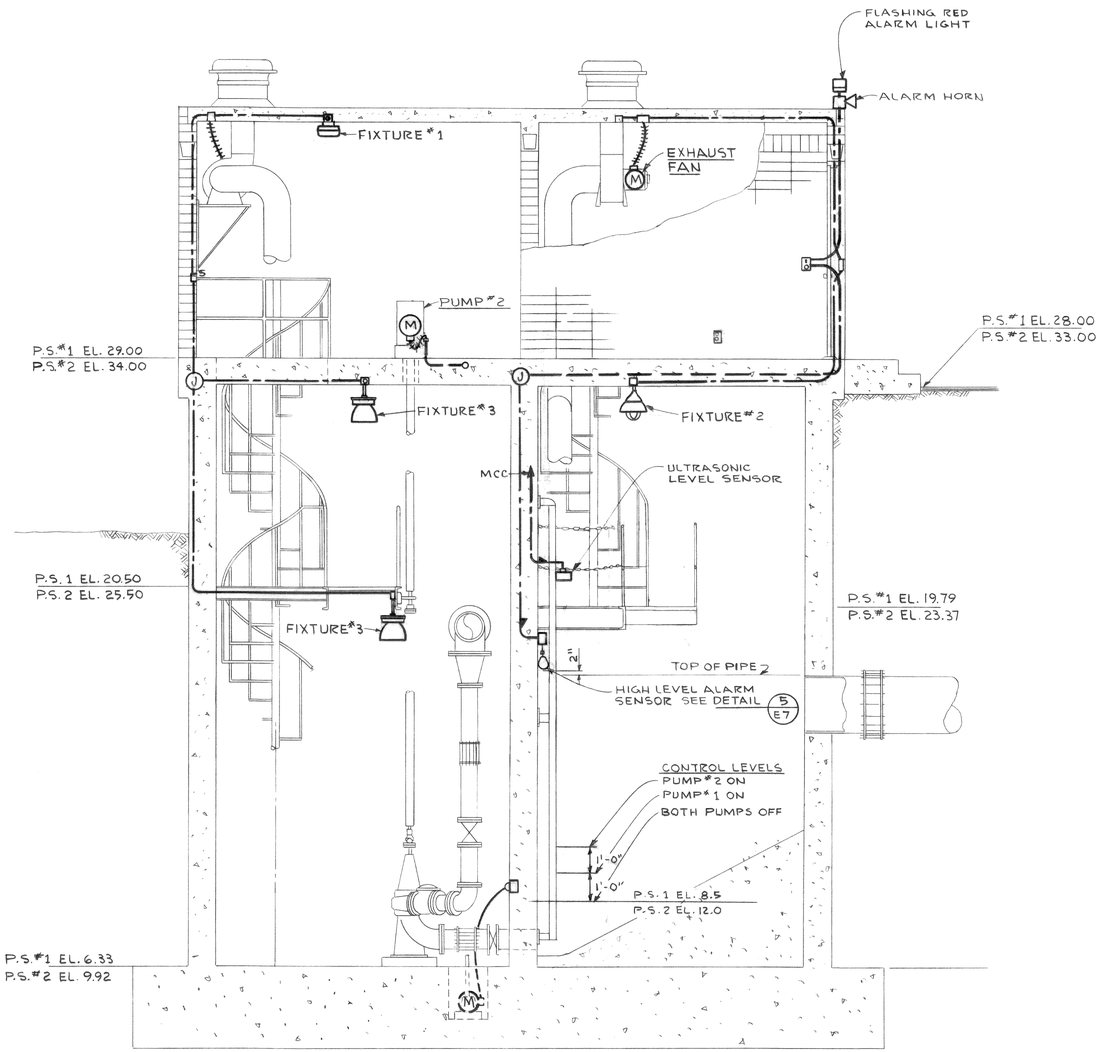

SECTION A/E6
SCALE 3/8" = 1'-0"

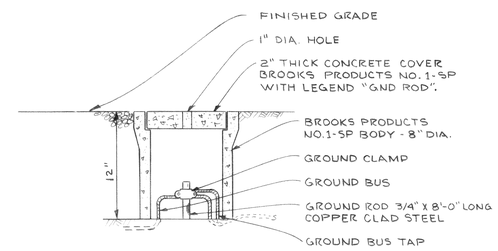

GROUND ROD INSTALLATION

DETAIL 1/E3
SCALE 1½" = 1'-0"

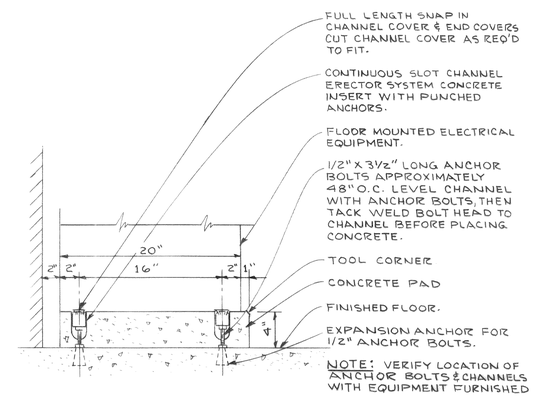

MOTOR CONTROL CENTER PAD

DETAIL 2/E3
NO SCALE

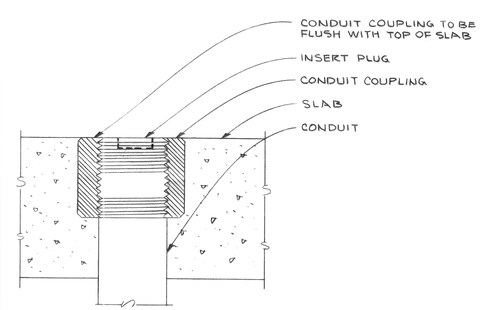

FUTURE CONDUIT TERMINATION

DETAIL 3/E8
NO SCALE

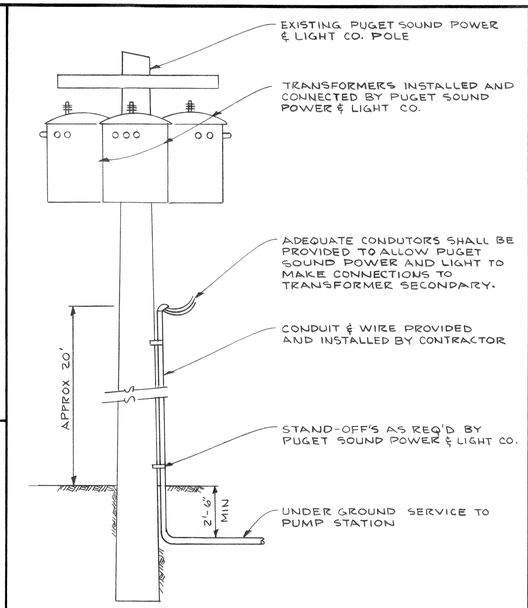

DETAIL 4/E1
NO SCALE

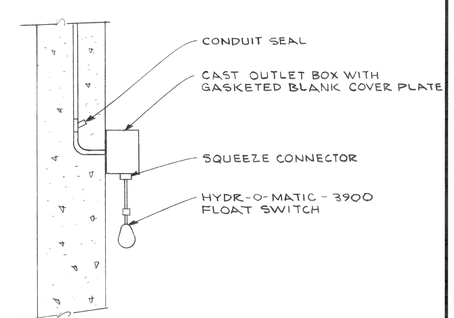

DETAIL 5/E7
NO SCALE

ROBERT J. CASNE
STATE OF WASHINGTON
REGISTERED PROFESSIONAL ENGINEER

DATE	NO.	REVISION	BY

DESIGNED R.J.C. | DRAWN J.M. | CHECKED | APPROVED | SCALE AS SHOWN | DATE JULY, 1972 | FILE 71-S-425.002

Stevens, Thompson & Runyan, Inc.
Engineers/Planners
PORTLAND SEATTLE BOISE

TOWN OF FERNDALE, WASHINGTON
AXTON ROAD INTERCEPTOR
SCHEDULE I

PUMP STATIONS 1 AND 2
ELECTRICAL SECTIONS & DETAILS

E7/11

MICROFILMED

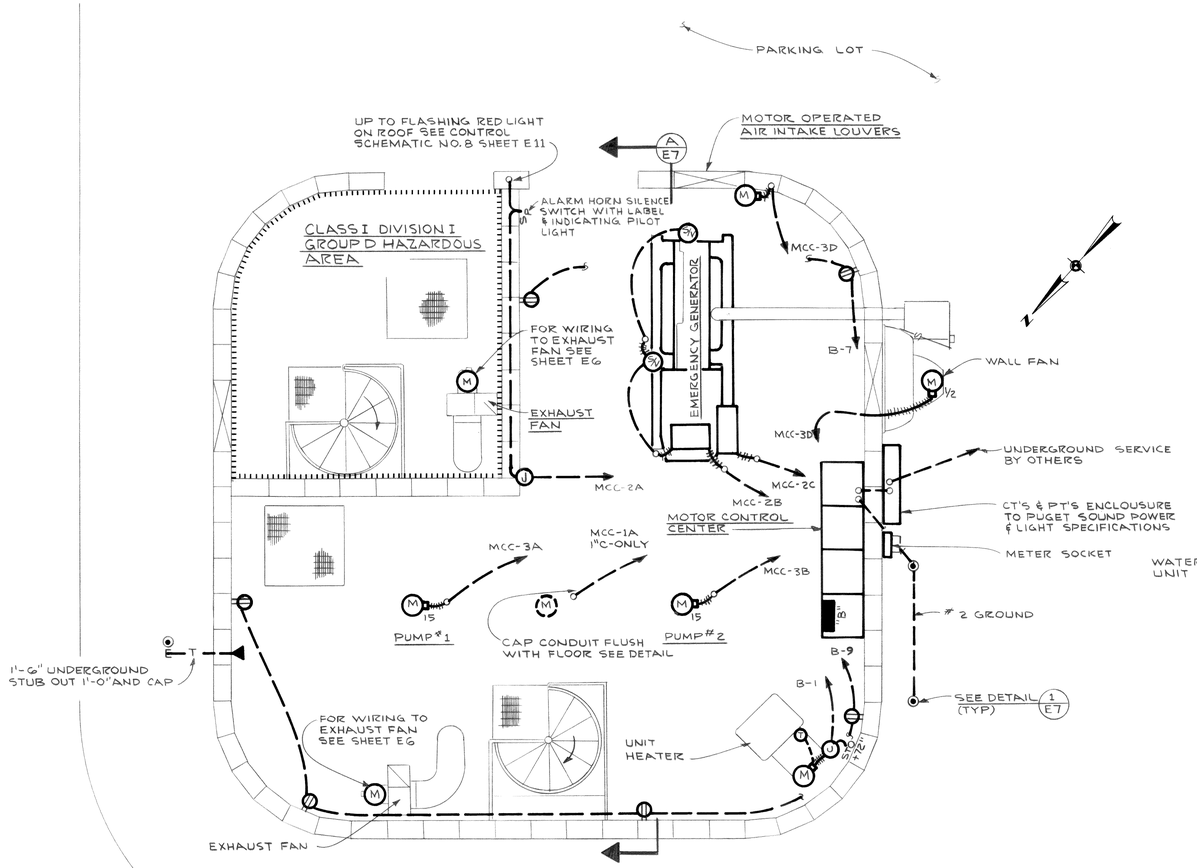

MOTOR FLOOR PLAN
SCALE 3/8" = 1'-0"

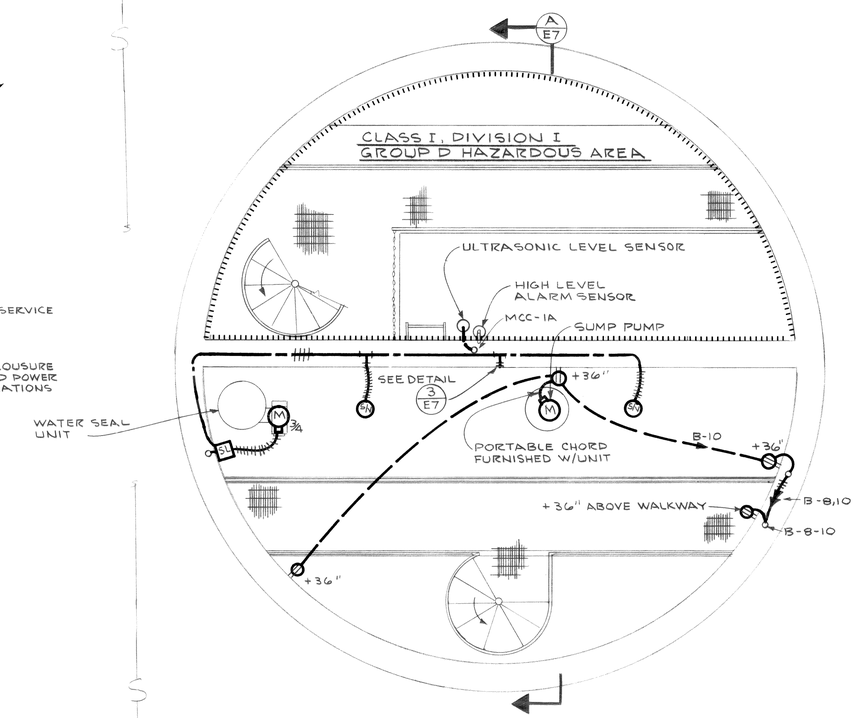

PUMP FLOOR PLAN
SCALE 3/8" = 1'-0"

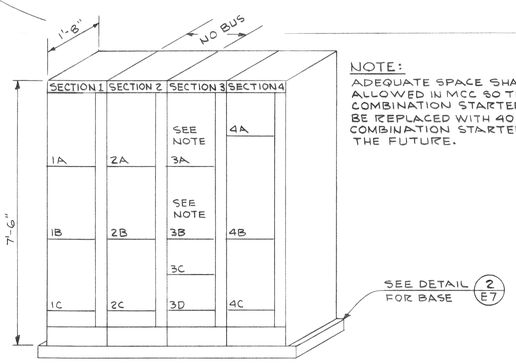

NOTE:
ADEQUATE SPACE SHALL BE ALLOWED IN MCC SO THAT 15 HP COMBINATION STARTERS MAY BE REPLACED WITH 40 HP COMBINATION STARTERS IN THE FUTURE.

MOTOR CONTROL CENTER
SCALE 1/2" = 1'-0"

M.C.C. NAMEPLATE ENGRAVING SCHEDULE

UNIT NO.	NAMEPLATE ENGRAVING SIZE 1"X 2 1/2" 16 CHARACTERS PER LINE MAX		
	FIRST LINE	SECOND LINE	THIRD LINE
1A	PUMP LEVEL	CONTROL	
1B			
1C	MAIN BREAKER		
2A	AUTOMATIC	TRANSFER SWITCH	CONTROL PANEL
2B	AUTOMATIC	TRANSFER SWITCH	
2C	GENERATOR	BREAKER	
3A	PUMP #1		
3B	PUMP #2		
3C	WATER SEAL PUMP		
3D	WALL FAN		
4A	LIGHTING	TRANSFORMER	BREAKER
4B	LIGHTING	PANEL "B"	
4C	LIGHTING	TRANSFORMER	208Y/120V, 3Ø, 4W

ROBERT J. CASNER STATE OF WASHINGTON REGISTERED PROFESSIONAL ENGINEER

DATE	NO.	REVISION	BY

DESIGNED R.J.C. | APPROVED | DRAWN J.M. | SCALE AS SHOWN | DATE JULY, 1972 | CHECKED | FILE 71-S-425.002

Stevens, Thompson & Runyan, Inc.
Engineers/Planners
PORTLAND SEATTLE BOISE

TOWN OF FERNDALE, WASHINGTON
AXTON ROAD INTERCEPTOR
SCHEDULE I

PUMP STATION I
ELECTRICAL POWER PLAN

E8/11

MICROFILMED

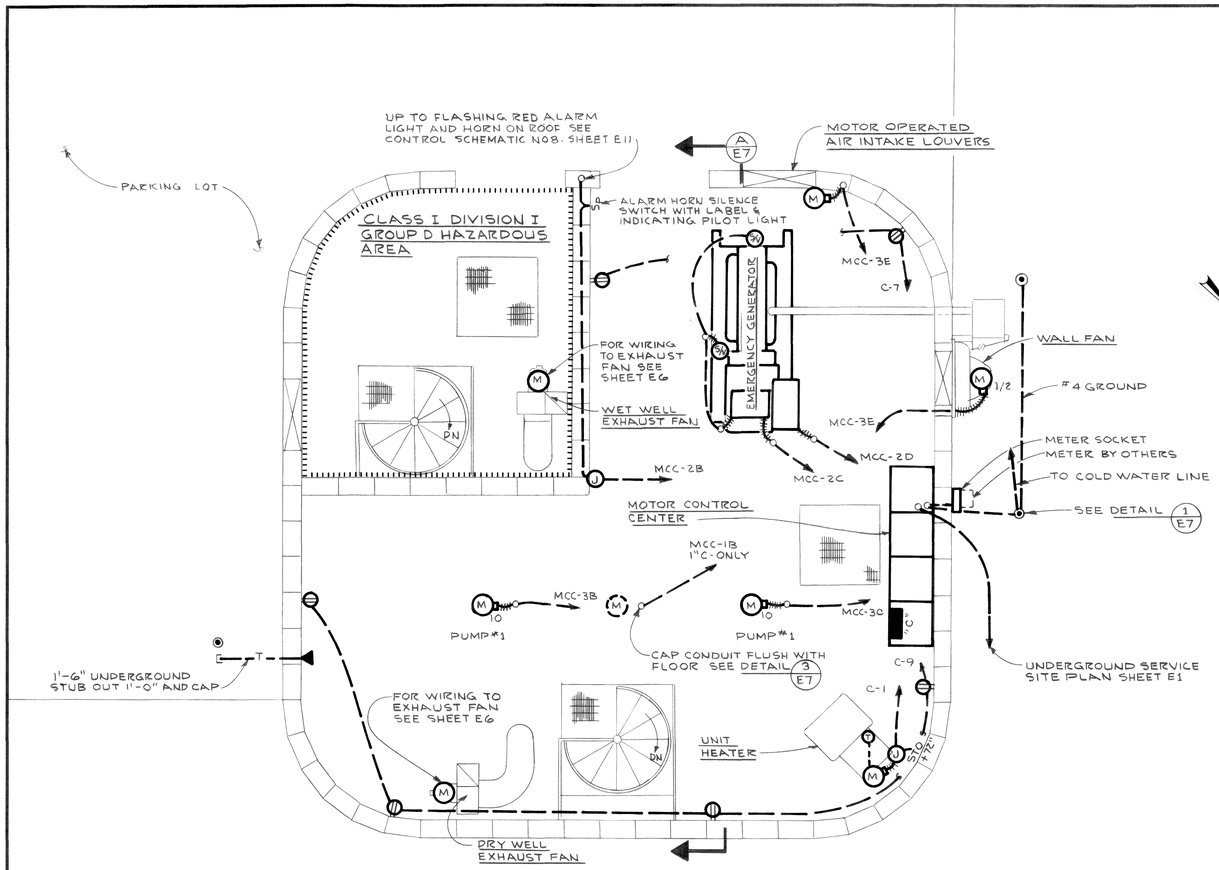

MOTOR ROOM FLOOR
SCALE 3/8" = 1'-0"

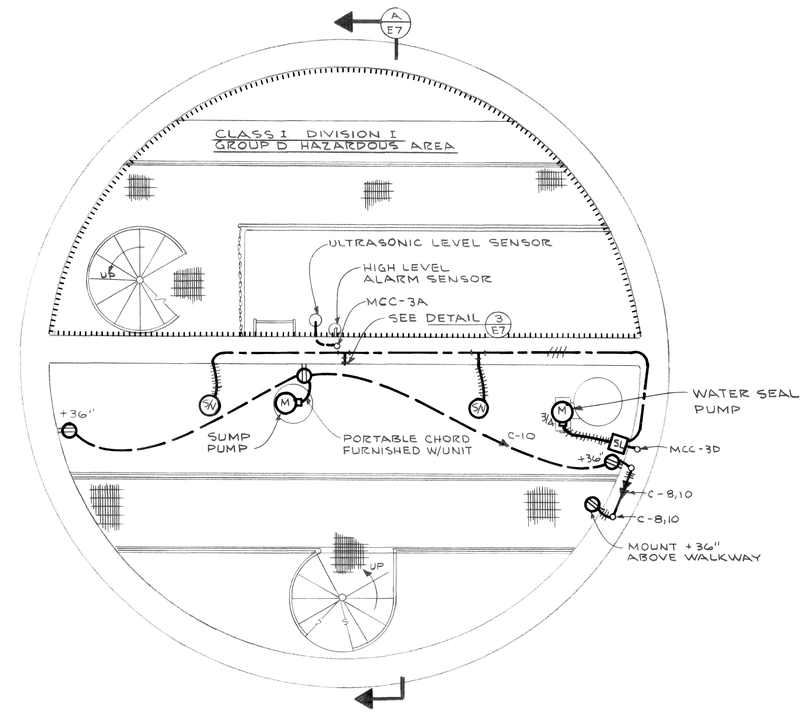

PUMP ROOM FLOOR
SCALE 3/8" = 1'-0"

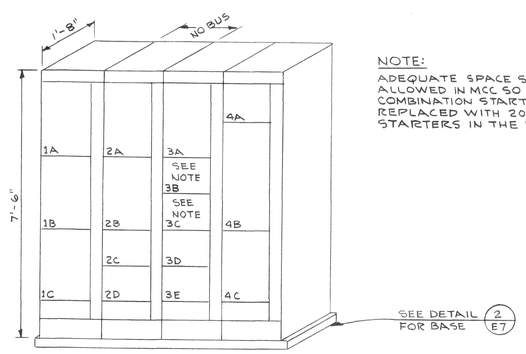

MOTOR CONTROL CENTER
SCALE 3/8" = 1'-0"

NOTE:
ADEQUATE SPACE SHALL BE ALLOWED IN MCC SO THAT 10HP COMBINATION STARTERS MAY BE REPLACED WITH 20HP COMBINATION STARTERS IN THE FUTURE.

M.C.C. NAMEPLATE ENGRAVING SCHEDULE

UNIT NO.	NAMEPLATE ENGRAVING SIZE 1" X 2½" 16 CHARACTERS PER LINE MAX.		
	FIRST LINE	SECOND LINE	THIRD LINE
1A			
1B	MAIN BREAKER		
1C	METERING CT'S & PT'S		
2A	EXHAUST FAN	CONTROLS	
2B	AUTOMATIC	TRANSFER SWITCH	CONTROL PANEL
2C	AUTOMATIC	TRANSFER SWITCH	
2D	GENERATOR	BREAKER	
3A	PUMP LEVEL	CONTROL	
3B	PUMP #1		
3C	PUMP #2		
3D	WATER SEAL PUMP		
3E	EXHAUST FAN		
4A	LIGHTING	TRANSFORMER	BREAKER
4B	LIGHTING PANEL "C"		
4C	LIGHTING	TRANSFORMER	208Y/120V, 3Ø, 4W

ROBERT J. CASNE STATE OF WASHINGTON REGISTERED PROFESSIONAL ENGINEER

DATE	NO.	REVISION	BY

DESIGNED R.J.C. APPROVED Robert Casne
DRAWN J.M. SCALE AS SHOWN DATE JULY, 1972
CHECKED DHB FILE 71-S-425.002

Stevens, Thompson & Runyan, Inc.
Engineers / Planners
PORTLAND SEATTLE BOISE

TOWN OF FERNDALE, WASHINGTON
AXTON ROAD INTERCEPTOR
SCHEDULE I

PUMP STATION 2
ELECTRICAL POWER PLAN

E9 / 11

MICROFILMED

SHANNON & CO.

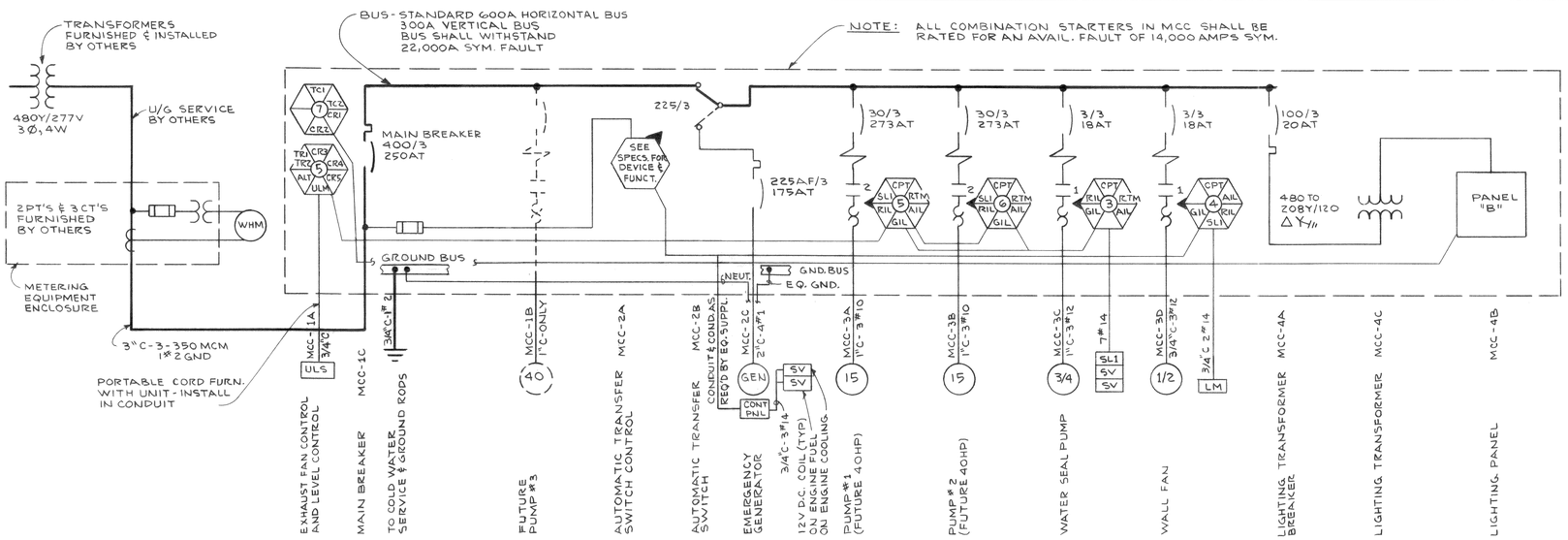

ONE LINE DIAGRAM
PUMP STATION 1

NOTES:

1. FOR ONE LINE DIAGRAM SYMBOLS AND CONTROL KEY SEE SHEET E4.

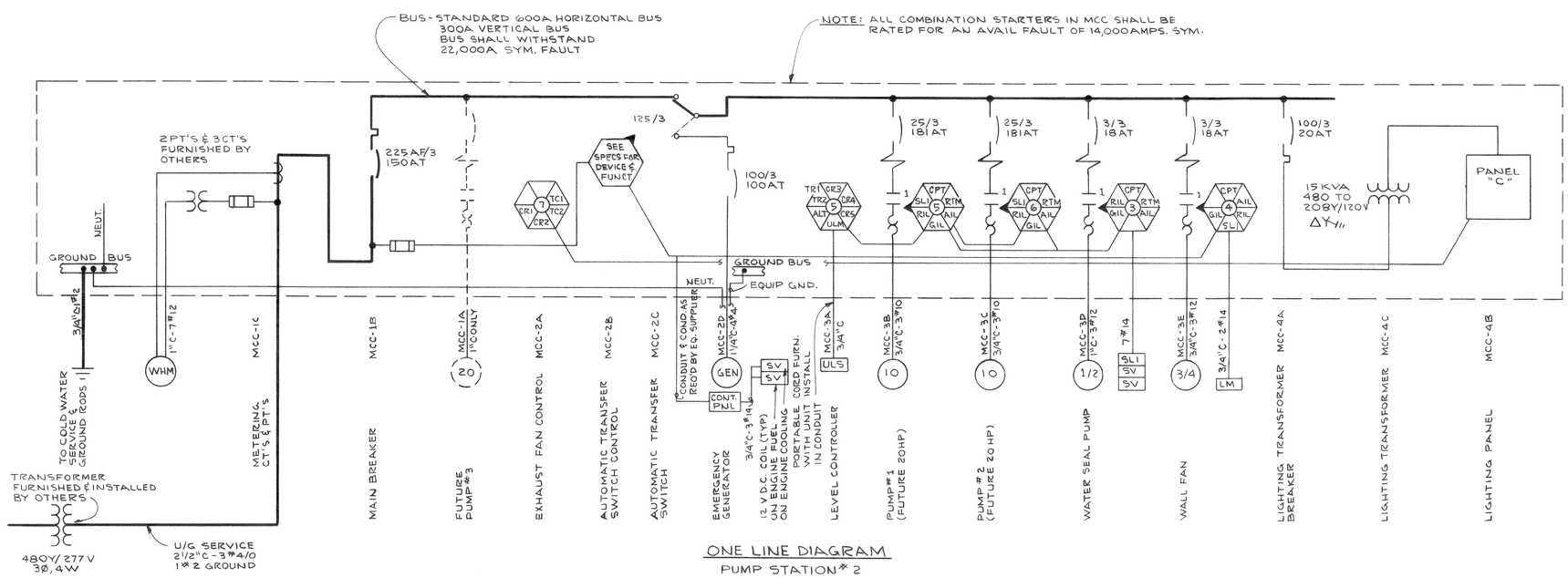

ONE LINE DIAGRAM
PUMP STATION # 2

DATE	NO.	REVISION	BY	DESIGNED R.J.C.	APPROVED	DRAWN J.M.	SCALE NONE	DATE JULY, 1972	CHECKED	FILE 71-S-425.002

Stevens, Thompson & Runyan, Inc.
Engineers / Planners
PORTLAND SEATTLE BOISE

TOWN OF FERNDALE, WASHINGTON
AXTON ROAD INTERCEPTOR
SCHEDULE I

PUMP STATIONS I AND 2
ELECTRICAL ONE LINE DIAGRAM

E10/11

ROBERT J. CASNE STATE OF WASHINGTON REGISTERED PROFESSIONAL ENGINEER

MICROFILMED

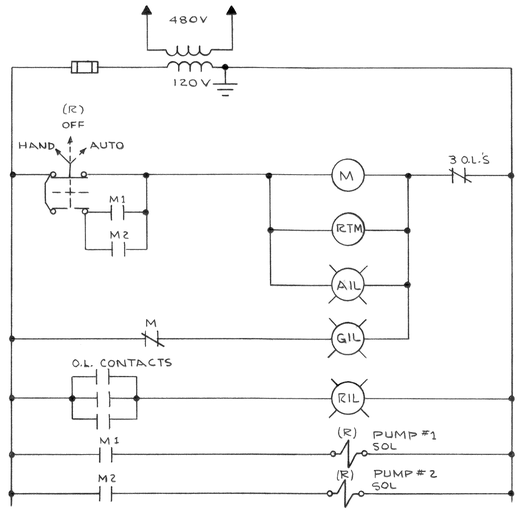

CONTROL SCHEMATIC NO. 3

WATER SEAL PUMP

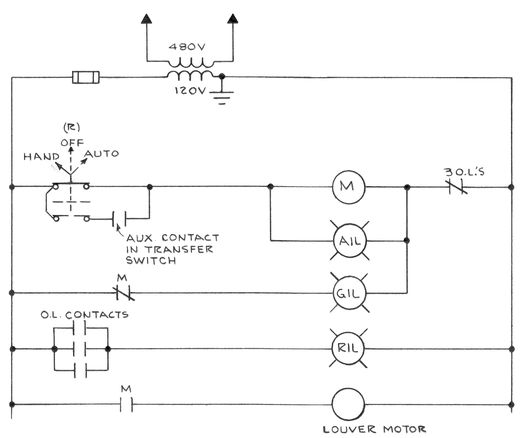

CONTROL SCHEMATIC NO. 4

WALL FAN

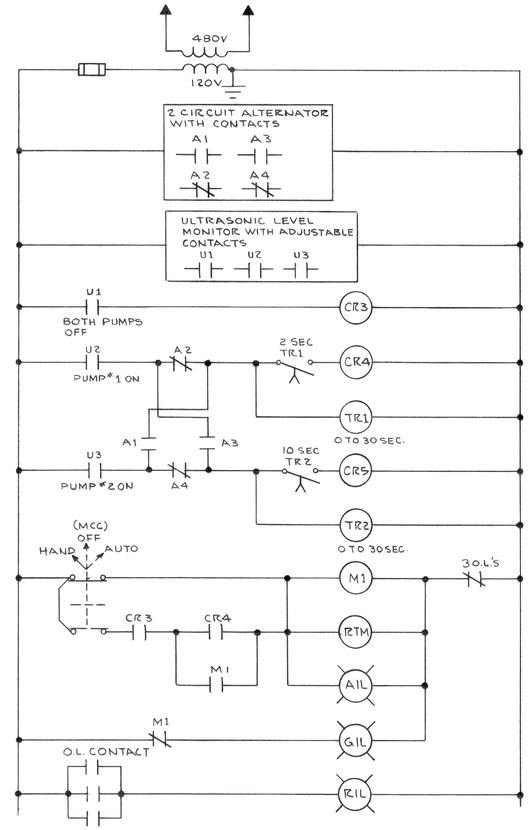

CONTROL SCHEMATIC NO. 5

PUMP NO. 1

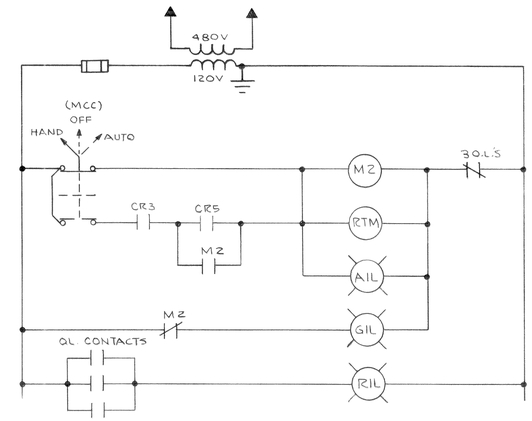

CONTROL SCHEMATIC NO. 6

PUMP NO. 2

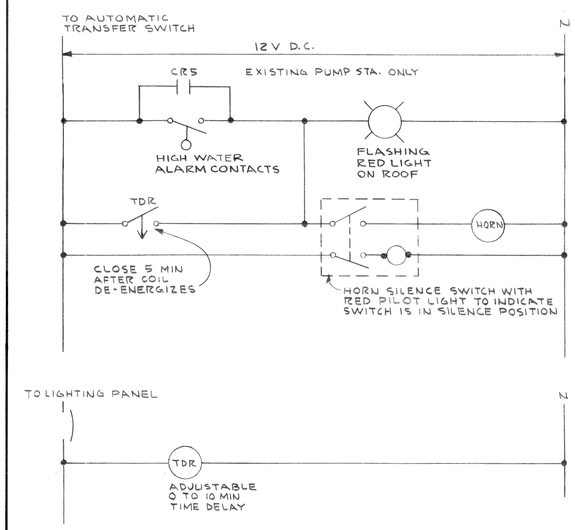

CONTROL SCHEMATIC NO. 8

POWER FAIL & HIGH WATER ALARM

ROBERT J. CASNE
STATE OF WASHINGTON
REGISTERED
PROFESSIONAL ENGINEER

DATE	NO.	REVISION	BY

DESIGNED R.J.C. | APPROVED
DRAWN J.M. | SCALE NONE | DATE JULY, 1972
CHECKED | FILE 71-S-425.002

Stevens, Thompson & Runyan, Inc.
Engineers / Planners
PORTLAND SEATTLE BOISE

TOWN OF FERNDALE, WASHINGTON
AXTON ROAD INTERCEPTOR
SCHEDULE I

PUMP STATIONS 1 AND 2
ELECTRICAL CONTROL SCHEMATICS

E11 / 11

MICROFILMED

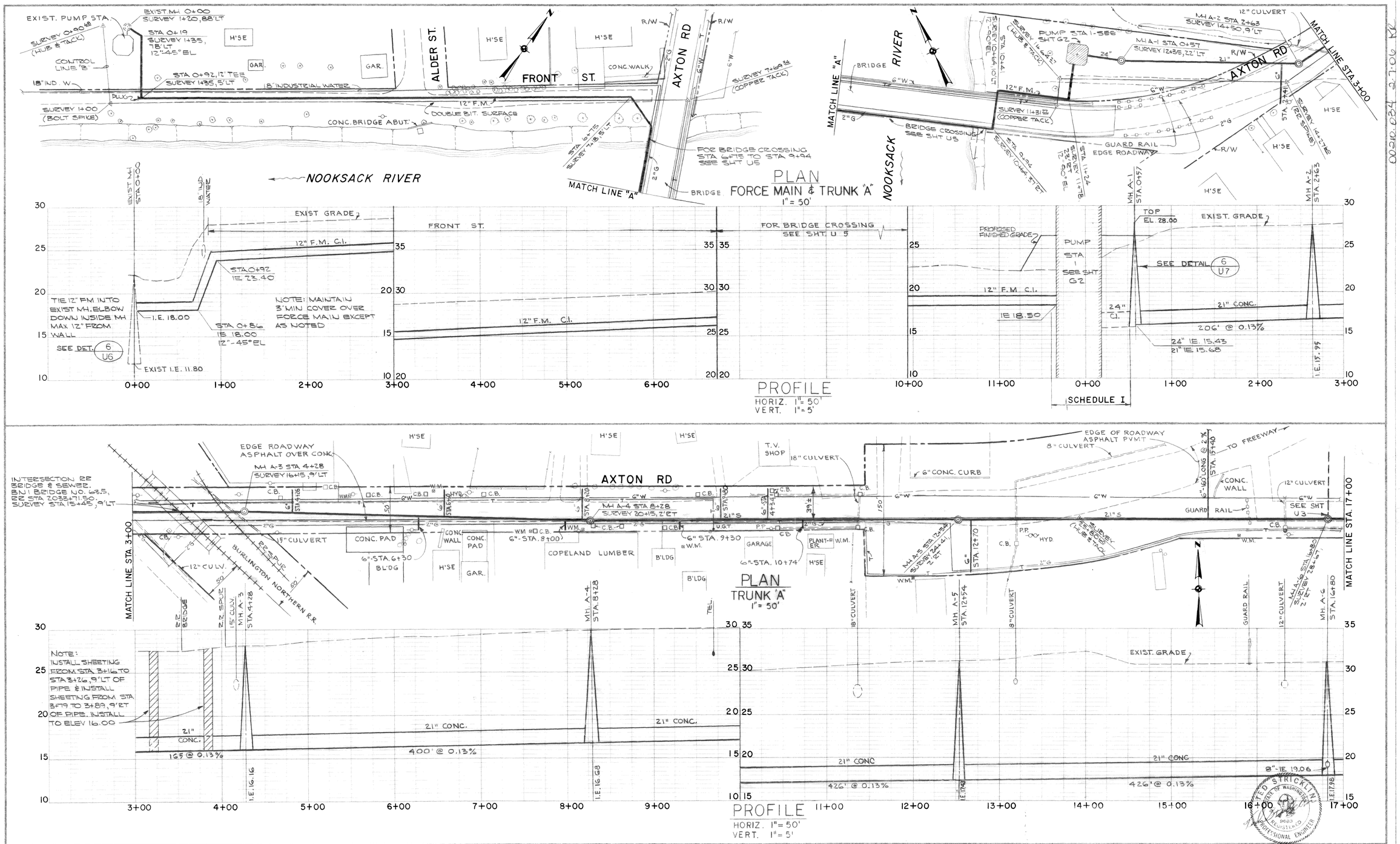

DATE	NO.	REVISION	BY	DESIGNED T.S.	DRAWN E.J.	CHECKED	APPROVED	SCALE AS SHOWN	DATE JULY, 1972	FILE 71-S-425.002

Stevens, Thompson & Runyan, Inc.
Engineers / Planners
PORTLAND · SEATTLE · BOISE · ANCHORAGE

TOWN OF FERNDALE, WASHINGTON
AXTON ROAD INTERCEPTOR
SCHEDULE II

FRONT STREET & AXTON ROAD
PLAN & PROFILE

U1 / 8

MICROFILMED

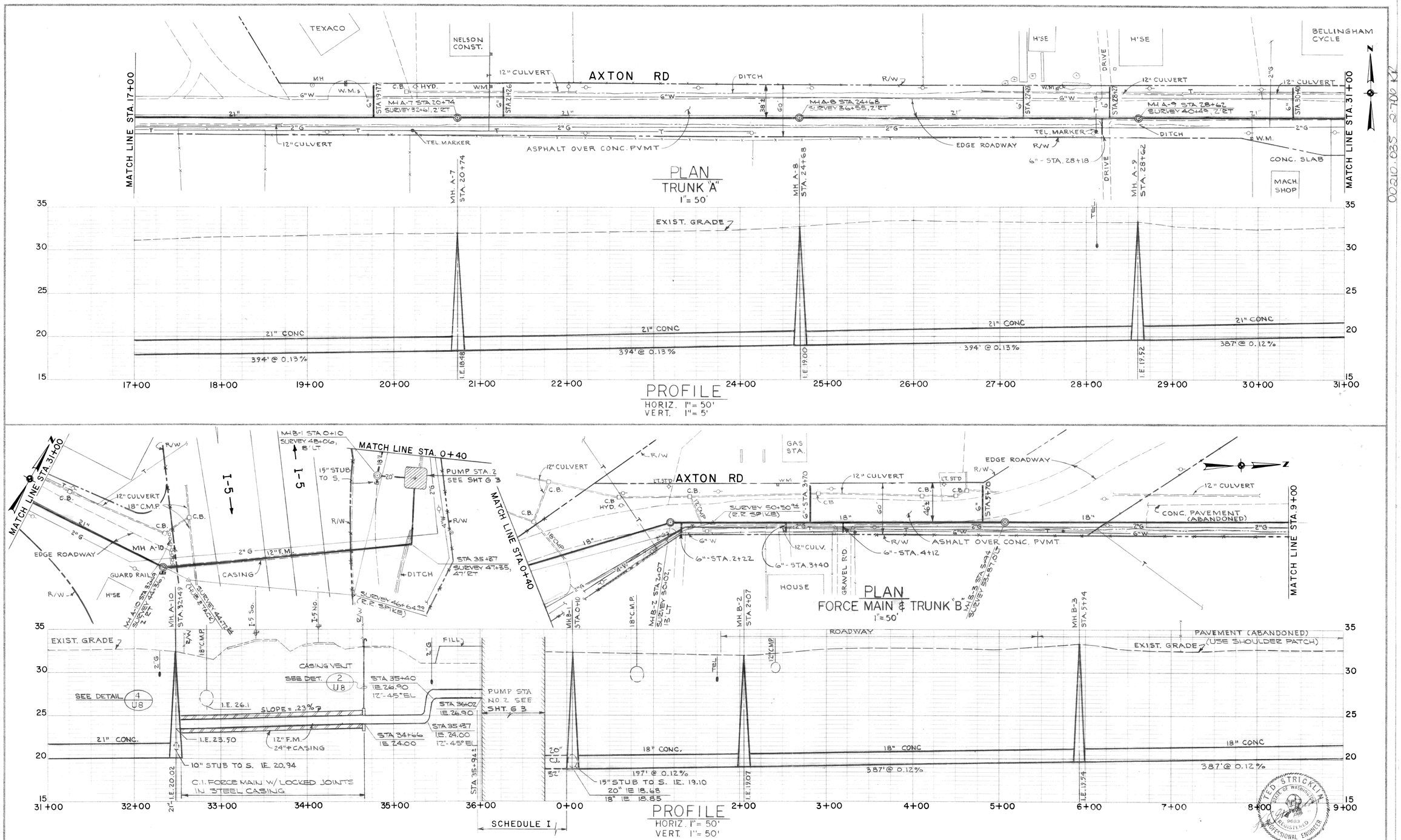

DATE	NO.	REVISION	BY
NOV. 72	1	ADDENDUM NO. 2	T.S.

DESIGNED T.S.
DRAWN E.J.
CHECKED
APPROVED
SCALE AS SHOWN
DATE JULY, 1972
FILE 71-S-425.002

Stevens, Thompson & Runyan, Inc.
Engineers / Planners
PORTLAND · SEATTLE · BOISE · ANCHORAGE

TOWN OF FERNDALE, WASHINGTON
AXTON ROAD INTERCEPTOR
SCHEDULE II

AXTON ROAD PLAN & PROFILE

U2 / 8

MICROFILMED

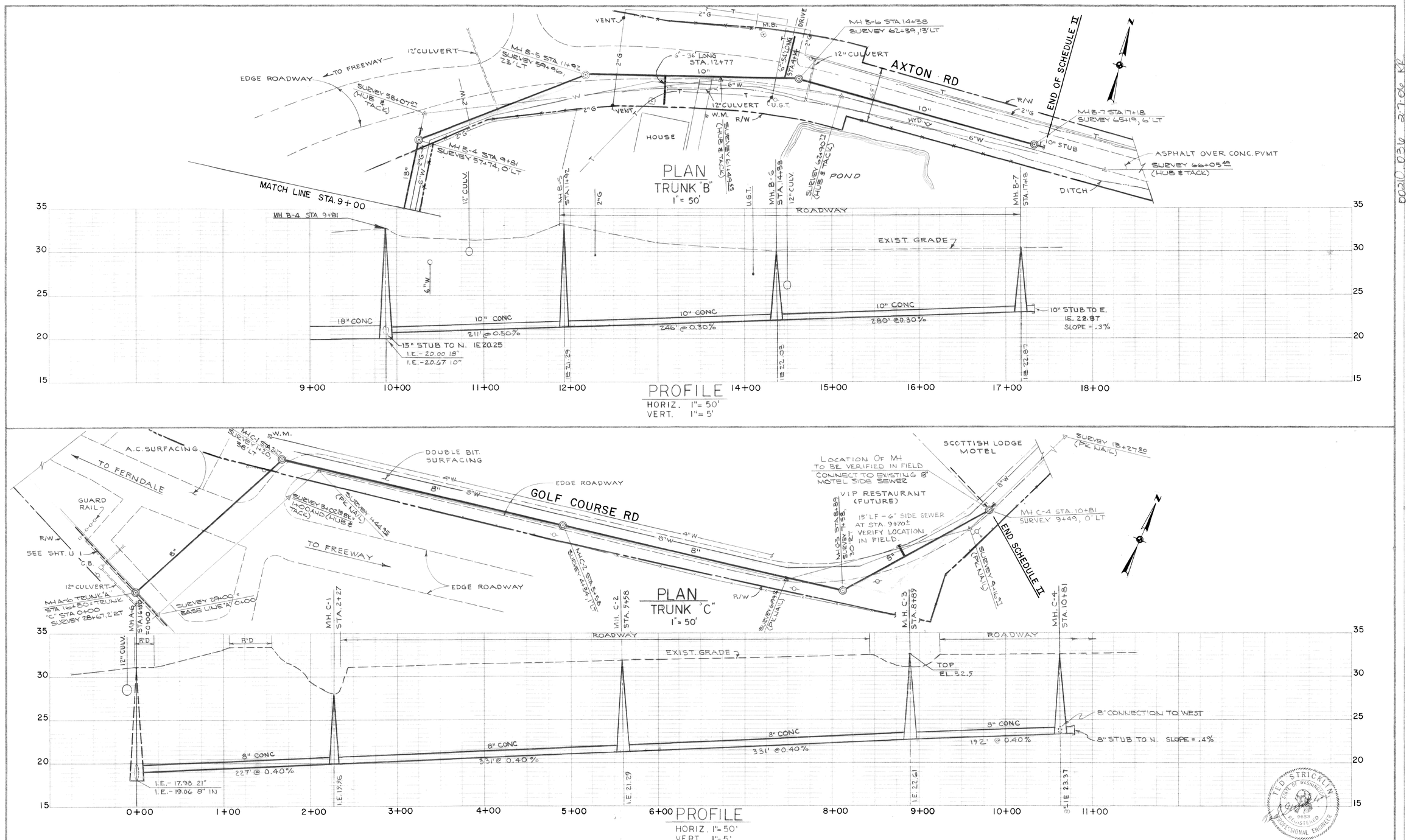

DATE / NO. / REVISION / BY	DESIGNED T.S. / DRAWN E.J. / CHECKED	APPROVED	Stevens, Thompson & Runyan, Inc. Engineers / Planners PORTLAND · SEATTLE · BOISE · ANCHORAGE	TOWN OF FERNDALE, WASHINGTON AXTON ROAD INTERCEPTOR SCHEDULE II	AXTON RD & GOLF COURSE RD PLAN & PROFILE
	SCALE AS SHOWN / DATE JULY, 1972				U3/8
	FILE 71-S-425.002				

MICROFILMED

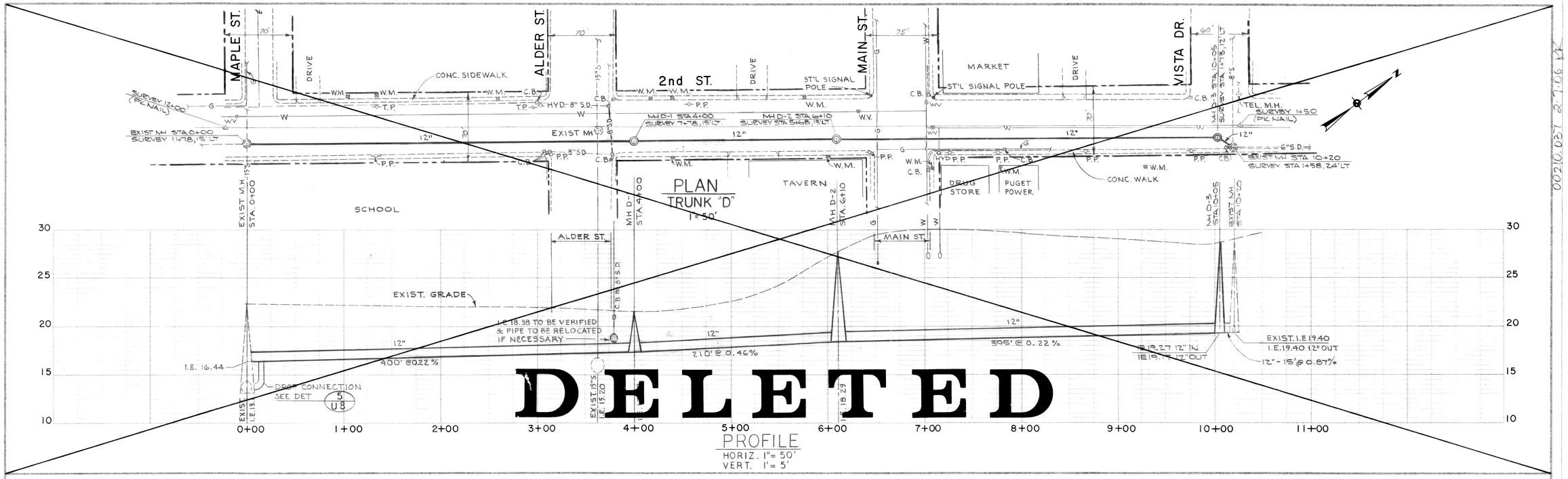

DATE	NO.	REVISION	BY	DESIGNED T.S.	APPROVED	
				DRAWN E.J.	SCALE AS SHOWN	DATE JULY, 1972
				CHECKED	FILE 71-S-425.002	

Stevens, Thompson & Runyan, Inc.
Engineers / Planners
PORTLAND · SEATTLE · BOISE · ANCHORAGE

TOWN OF FERNDALE, WASHINGTON
AXTON ROAD INTERCEPTOR
SCHEDULE II

SECOND STREET
PLAN & PROFILE

U4/8

MICROFILMED

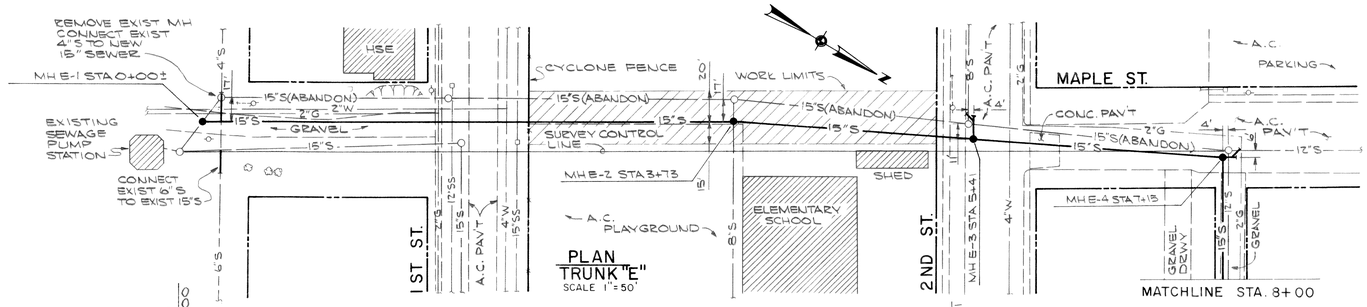

PLAN
TRUNK "E"
SCALE 1" = 50'

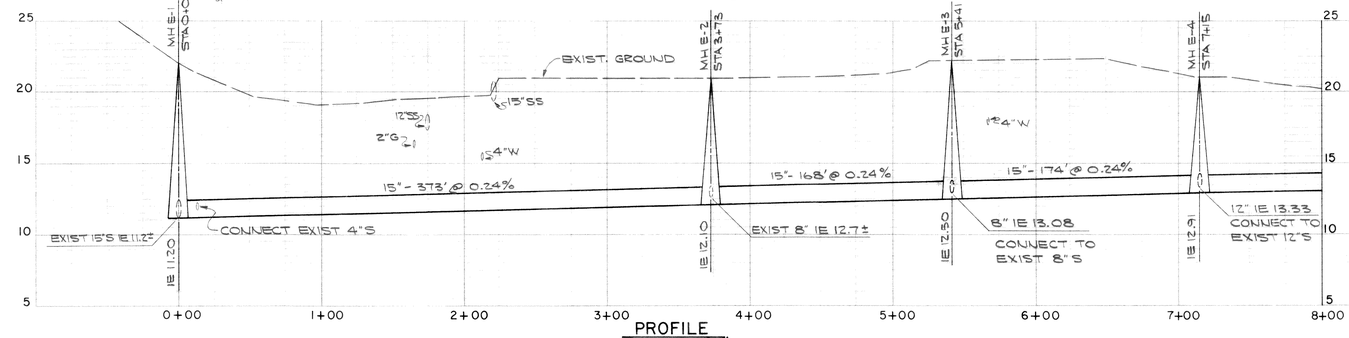

PROFILE
TRUNK "E"
SCALES HORIZ. 1" = 50'
VERT. 1" = 5'

NOTES

1. M.H. E-3, E-4, E-5 & E-7. CONNECT EXISTING SANITARY SEWER TO NEW M.H. PER DETAIL (1/U9)
2. M.H. E-1. INSTALL NEW M.H. OVER EXISTING SANITARY SEWER PER DETAIL (2/U9)
3. M.H. E-2. INSTALL NEW M.H. OVER EXISTING SANITARY SEWER PER DETAIL (3/U9)
4. CONNECT EXISTING SIDE SEWERS WHICH ARE IN USE TO NEW SANITARY SEWER PER DETAIL (4/U9)
5. ABANDON EXISTING SANITARY SEWER. SEE SPECIFICATIONS.
6. EXISTING SIDE SEWERS NOT SHOWN. LOCATE IN FIELD.

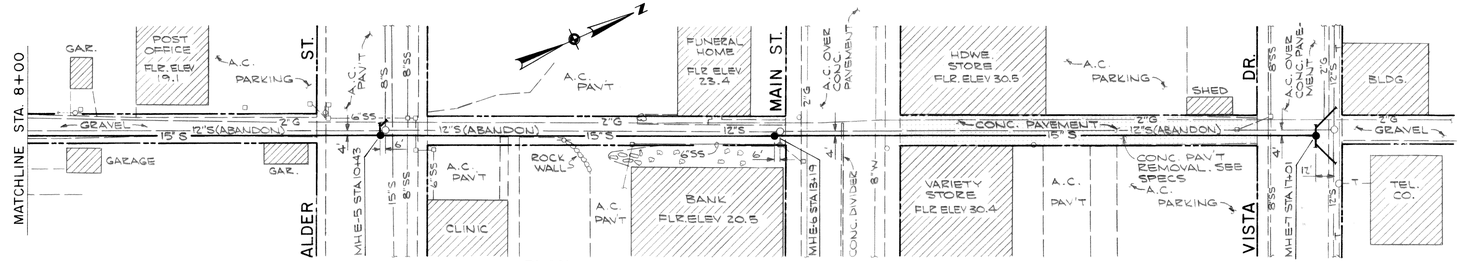

PLAN
TRUNK "E"
SCALE 1" = 50'

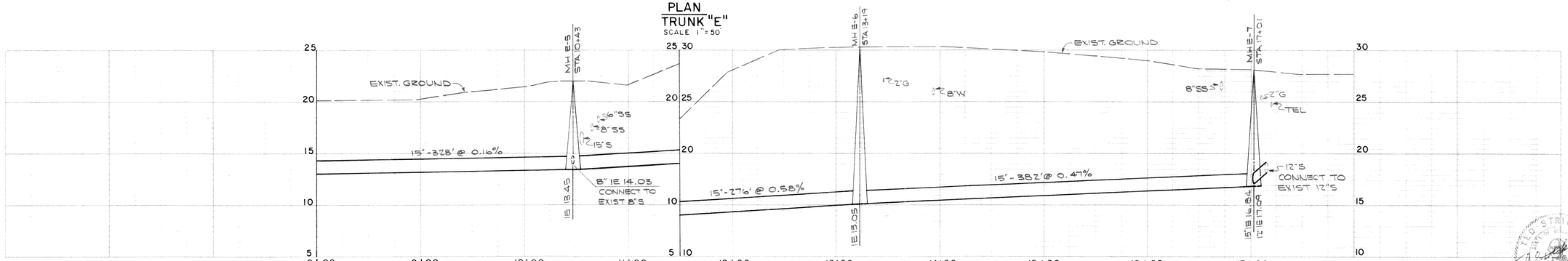

PROFILE
TRUNK "E"
SCALES HORIZ. 1" = 50'
VERT. 1" = 5'

NOV. 72	1	ADDENDUM 1	T.S.	
DATE	NO.	REVISION	BY	

DESIGNED T.S. DRAWN J.M.H. CHECKED DVH
APPROVED Dennis N. Fiske
SCALE AS SHOWN DATE NOV. 1972
FILE 71-S-425.022

Stevens, Thompson & Runyan, Inc.
Engineers / Planners
PORTLAND · SEATTLE · BOISE · ANCHORAGE

TOWN OF FERNDALE, WASHINGTON
AXTON ROAD INTERCEPTOR
SCHEDULE II

SEWER REPLACEMENT
PLAN & PROFILE

U4A/9

MICROFILMED

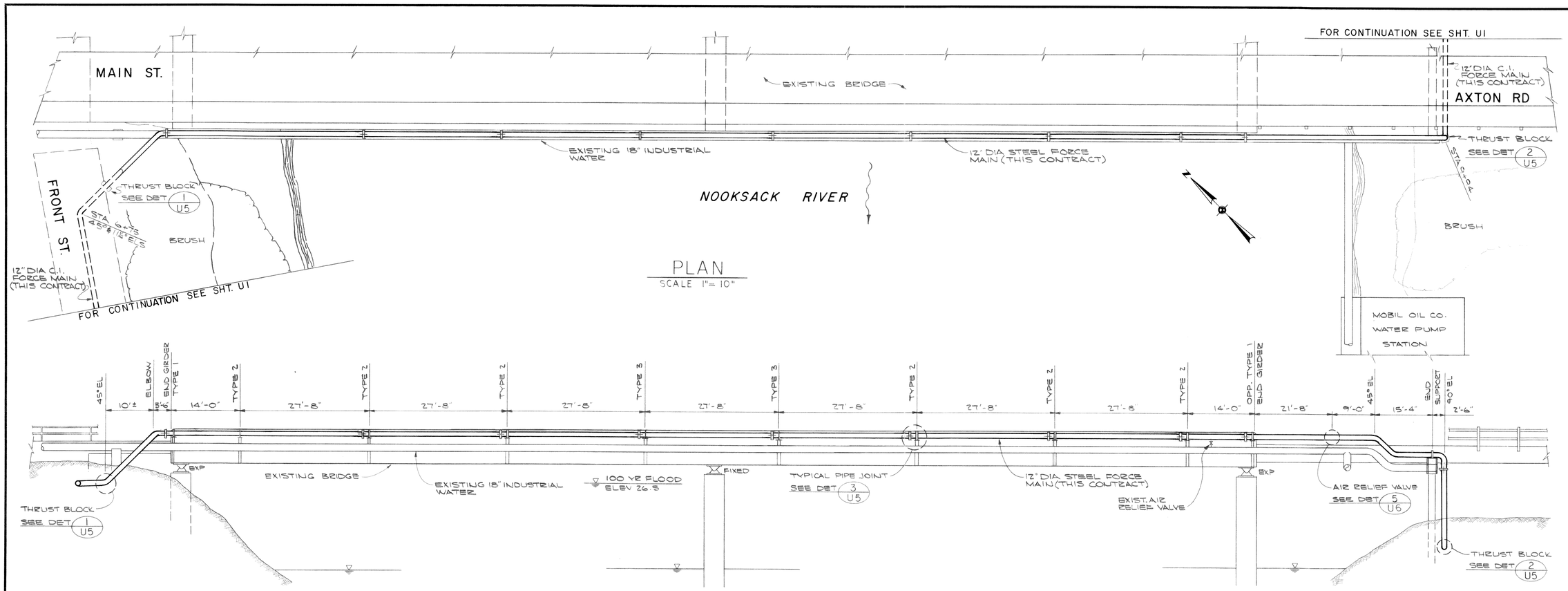

PLAN
SCALE 1" = 10'

ELEVATION
SCALE 1" = 10'

NOTE: 5' MIN COVER REQUIRED AT ELBOW

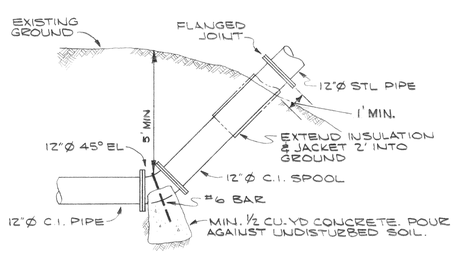

DETAIL 1 / U5
THRUST BLOCK
SCALE 3/8" = 1'-0"

NOTE: 5' MIN COVER REQUIRED AT ELBOW.

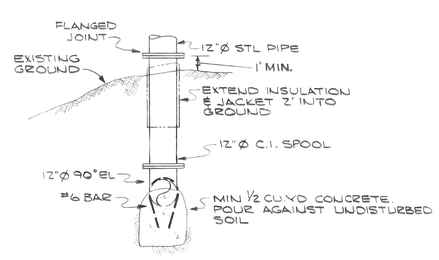

DETAIL 2 / U5
THRUST BLOCK
SCALE 3/8" = 1'-0"

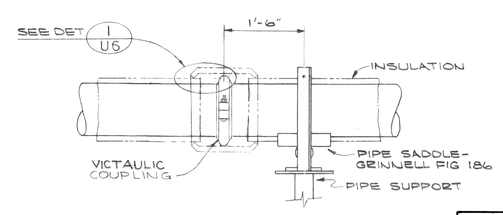

DETAIL 3 / U5
TYPICAL PIPE JOINT
SCALE 3/8" = 1'-0"

NOTES:

1. Caution: Do not disturb existing 18-inch water line when installing new support bracket at each end of bridge. This line must remain in operation at all times. Temporary shoring of pipe subject to approval of engineer.
2. All location dimensions are approximate only and must be verified by contractor. Verify configuration of pipe support attachment.
3. Locate pipe support to clear rivets in existing angles. Use one-eighth inch shims under pipe roll stand as necessary. Maximum shim thickness one-half inch.
4. Type 1,2 and 3 pipe supports similar. See Sheet U6 for list of applicable details.
5. See specifications for cleaning, welding and painting.
6. Provide one-inch thick insulation with protective .016 thick aluminum jacket full length of exposed pipe. Extend into ground 2 feet.
7. Install two-inch wide aluminum bands at 1 foot 6 inches center to center. Minimum distance between joint in jacket and joint in insulation shall be 6 inches.
8. Overlap insulation and jacket at each flexible coupling as shown. Apply aluminum mastic in area shown. Install 2-inch wide aluminum bands at overlap.

GRAPHIC SCALES
0 5 10 20 30 40
1" = 10'-0"
0 1 2 3 4 5 6 7 8 9 10
3/8" = 1'-0"

RAMON D. UPSAHL — STATE OF WASHINGTON — REGISTERED PROFESSIONAL ENGINEER

DATE	NO.	REVISION	BY

DESIGNED RDU — APPROVED
DRAWN J.M.H — SCALE AS SHOWN — DATE JULY, 1972
CHECKED — FILE 71-S-425.002

Stevens, Thompson & Runyan, Inc.
Engineers/Planners
PORTLAND SEATTLE BOISE

TOWN OF FERNDALE, WASHINGTON
AXTON ROAD INTERCEPTOR
SCHEDULE II

NOOKSACK RIVER
BRIDGE CROSSING

U5 / 8

MICROFILMED

BHANNON & CO.

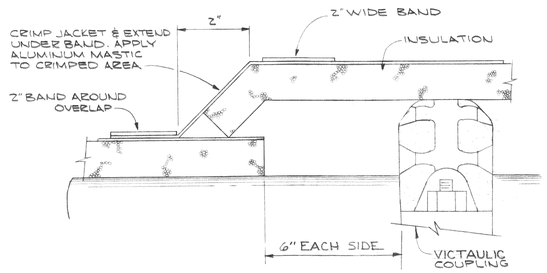

DETAIL 1 / U5
NO SCALE

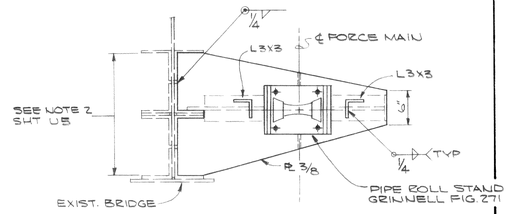

VIEW 2 / U6
TYPE 1
SCALE: 1" = 1'-0"

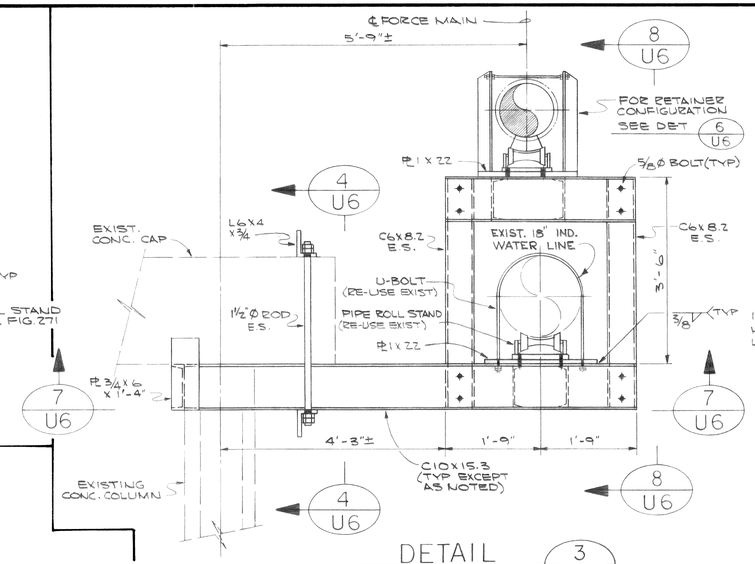

DETAIL 3 / U5
END SUPPORT
SCALE: 3/4" = 1'-0"

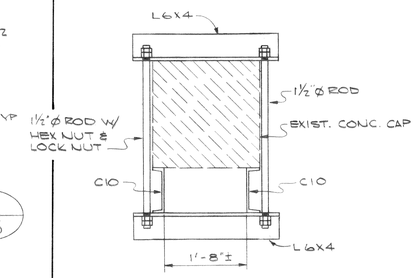

SECTION 4 / U6
SCALE: 3/4" = 1'-0"

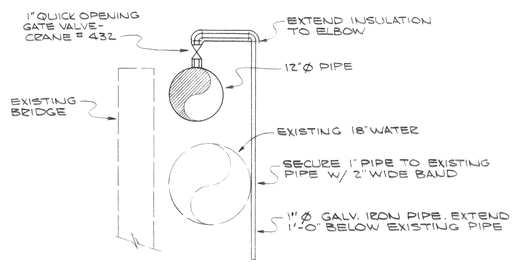

DETAIL 5 / U5
AIR RELIEF VALVE
NO SCALE

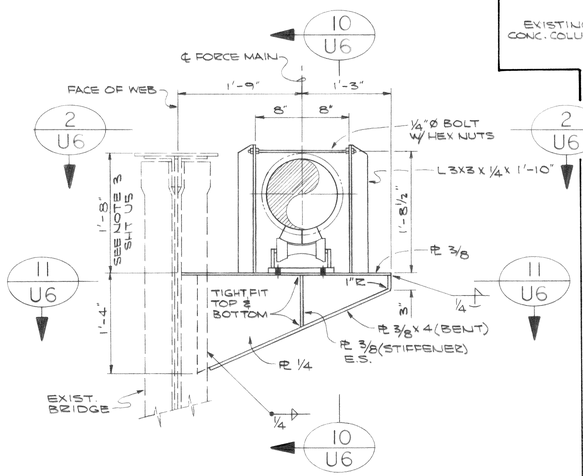

DETAIL 6 / U5
TYPE 1
SALE: 1" = 1'-0"

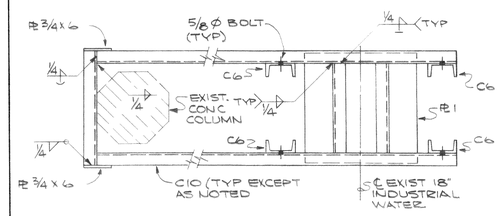

BOTTOM VIEW 7 / U6
SCALE: 3/4" = 1'-0"

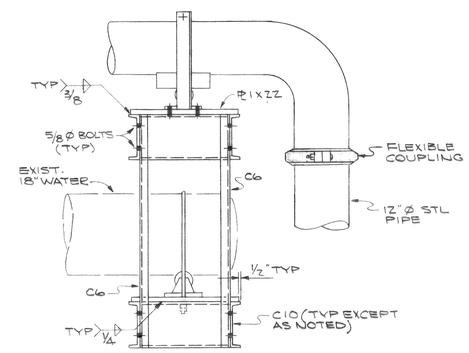

VIEW 8 / U6
SCALE: 3/4" = 1'-0"

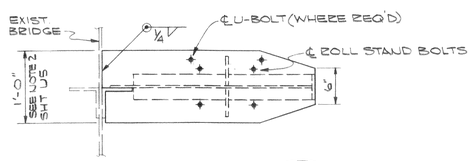

DETAIL 9 / U5
TYPE 2 & 3
SCALE: 1" = 1'-0"

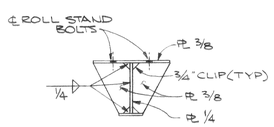

SECTION 10 / U6
SCALE: 1" = 1'-0"

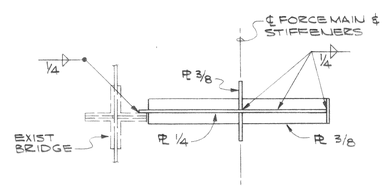

SECTION 11 / U6
SCALE: 1" = 1'-0"

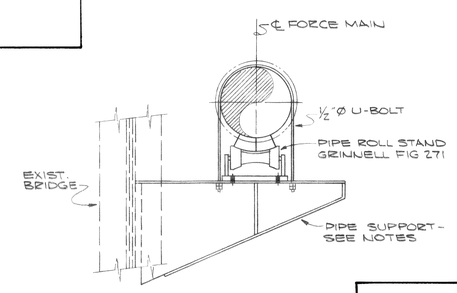

DETAIL 12 / U5
TYPE 3
SCALE: 1" = 1'-0"

GRAPHIC SCALES

0 1/2 1 2 3 4 5
3/4" = 1'-0"

0 1/2 1 2 3 4
1" = 1'-0"

NOTES:

Type 1 Support:
- Plan - See View 2
- Elev. - See Detail 6
- Sections - See Sections 10 & 11

Type 2 Support:
- Plan - See Detail 9
- Elev. - See Detail 6
- Sections - See Sections 10 & 11

Type 3 Support:
- Plan - See Detail 9
- Elev. - (Support Only) See Detail 6
- Elev. - (Retainer Only) See Detail 12
- Sections - See Sections 10 & 11

RAMON D. UPSANI — STATE OF WASHINGTON — REGISTERED PROFESSIONAL ENGINEER

DATE	NO.	REVISION	BY

DESIGNED RDU | APPROVED
DRAWN J.M.H. | SCALE AS SHOWN | DATE JULY, 1972
CHECKED | FILE 71-S-425.002

Stevens, Thompson & Runyan, Inc.
Engineers / Planners
PORTLAND SEATTLE BOISE

TOWN OF FERNDALE, WASHINGTON
AXTON ROAD INTERCEPTOR
SCHEDULE II

NOOKSACK RIVER
BRIDGE CROSSING DETAILS

U6 / 8

MICROFILMED

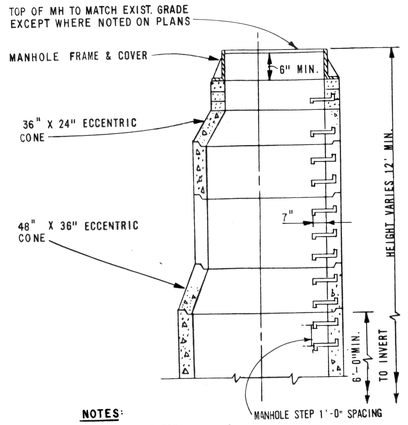

NOTES:
1) ALTERNATE FOR MANHOLES OVER 12' IN HEIGHT
2) SEE STANDARD MANHOLE (THIS SHEET) FOR CONSTRUCTION DETAILS.

TAPERED MANHOLE (1 / U1-U4)
NO SCALE

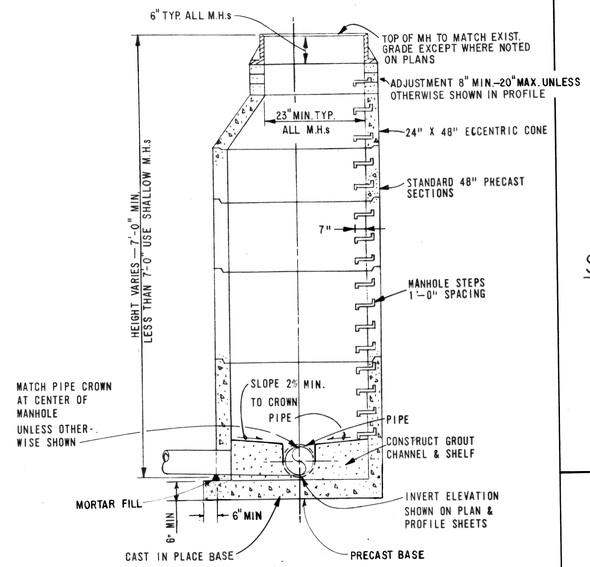

STANDARD MANHOLE (2 / U1-U4)
PIPE SIZE 21" & SMALLER
NO SCALE

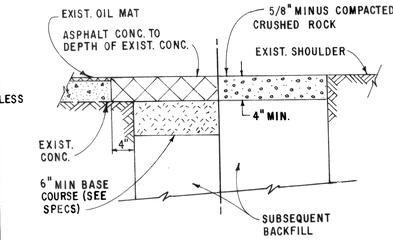

SURFACE RESTORATION (3 / U1-U5)
NO SCALE

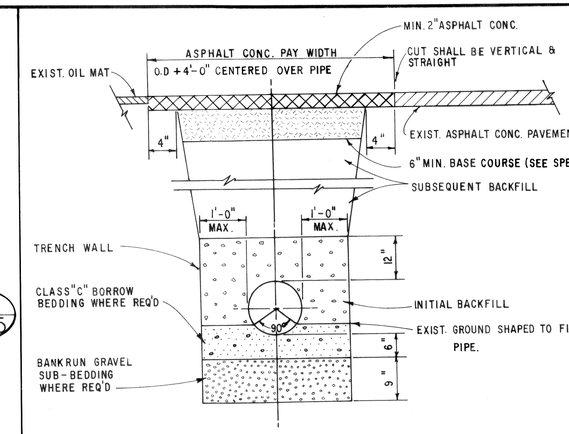

TYPICAL TRENCH (4 / U1-U5)
NO SCALE

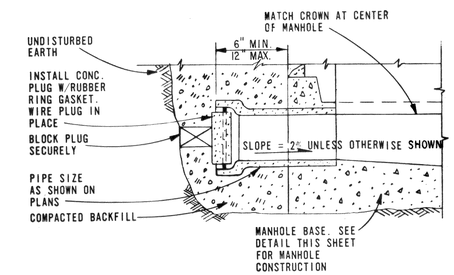

TYPICAL STUB (8 / U1-U3)
NO SCALE

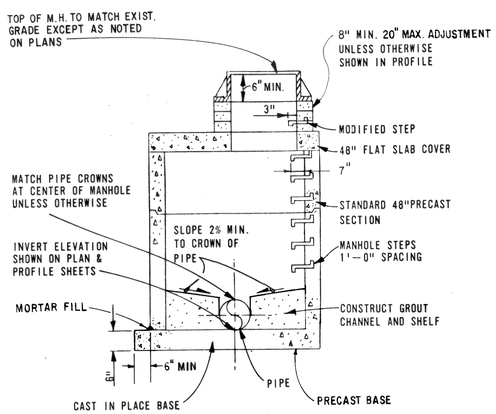

SHALLOW MANHOLE (5 / U1-U4)
PIPE SIZE 21"
NO SCALE

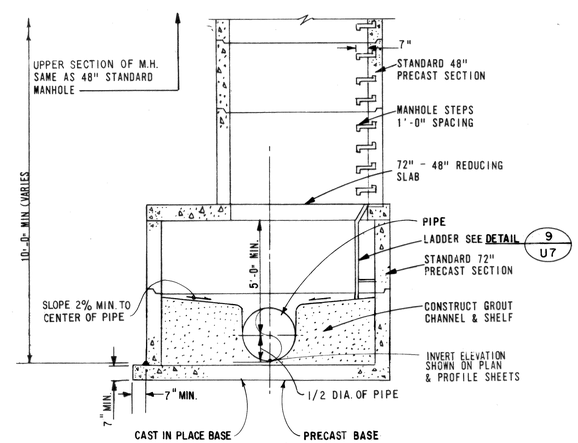

STANDARD MANHOLE (6 / U1)
PIPE SIZE 24"
NO SCALE

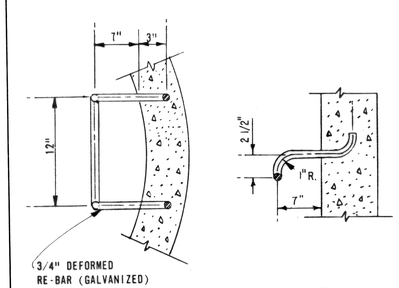

PLAN SECTION

MANHOLE STEP (7 / U1-U4)
NO SCALE

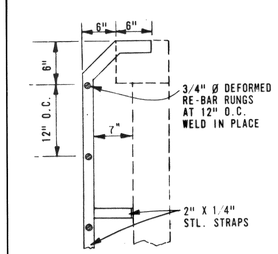

NOTE: GALVANIZE ALL STEEL AFTER FABRICATION

MANHOLE LADDER (9 / U7)
NO SCALE

TED STRICKLIN — STATE OF WASHINGTON — REGISTERED PROFESSIONAL ENGINEER

MICROFILMED

DATE	NO.	REVISION	BY

DESIGNED T.S. | DRAWN E.J. | CHECKED LHC | APPROVED | SCALE NONE | DATE JULY, 1972 | FILE 71-S-425.002

Stevens, Thompson & Runyan, Inc.
Engineers/Planners
PORTLAND SEATTLE BOISE

TOWN OF FERNDALE, WASHINGTON
AXTON ROAD INTERCEPTOR
SCHEDULE II

SEWER DETAILS

U7 / 8

MICROFILMED

NOTE:
1. PLUG ENDS OF ALL SIDE SEWERS TYP. STUB DETAIL

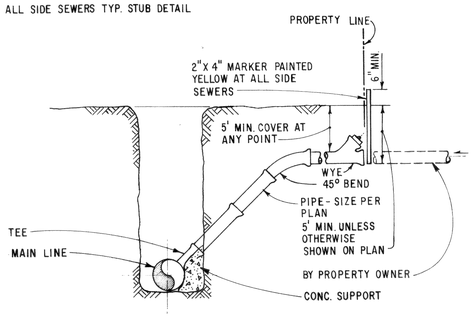

SIDE SEWER (1 / U1-U3)
NO SCALE

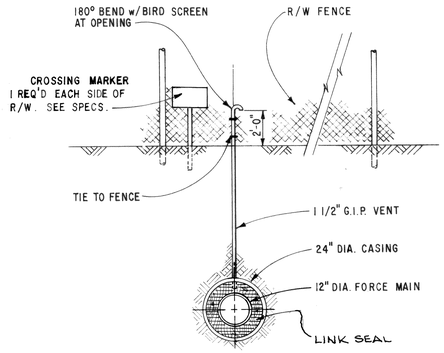

CASING VENT PIPE (2 / U2)
NO SCALE

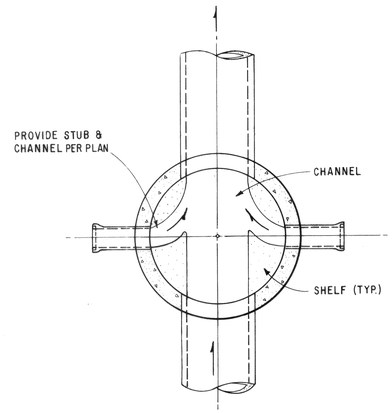

TYPICAL CHANNEL (3 / U1-U4)
NO SCALE

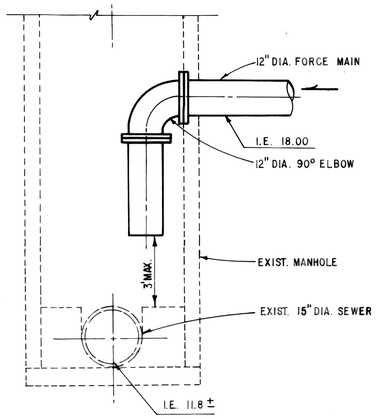

FORCE MAIN CONNECTION TO EXISTING MANHOLE (6 / U1)
NO SCALE

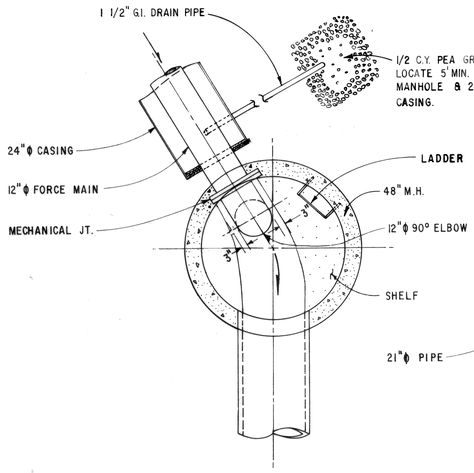

PLAN

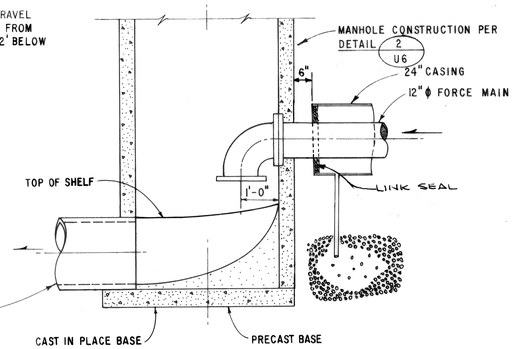

SECTION

MANHOLE A-10 (4 / U2)
NO SCALE

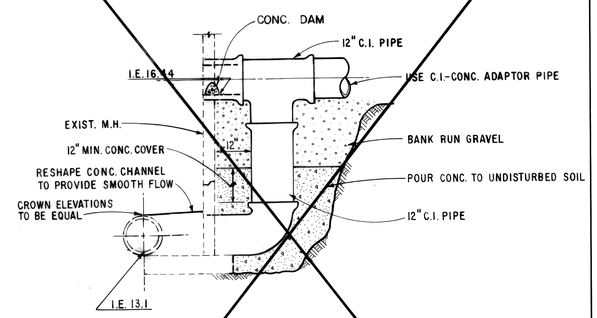

DROP CONNECTION (5 / U4)
EXISTING MANHOLE

DELETED

TED STRICKLIN
STATE OF WASHINGTON
9683
REGISTERED
PROFESSIONAL ENGINEER

MICROFILMED

DATE	NO.	REVISION	BY

DESIGNED T.S. | DRAWN E.J. | CHECKED DRS
APPROVED Ted Harmer
SCALE NONE | DATE JULY, 1972
FILE 71-S-425.002

Stevens, Thompson & Runyan, Inc.
Engineers/Planners
PORTLAND SEATTLE BOISE

TOWN OF FERNDALE, WASHINGTON
AXTON ROAD INTERCEPTOR
SCHEDULE II

SEWER DETAILS

U8 / 8

00240.042 2-7-06 KR

SHANNON & CO

1. PLAN SHOWN FOR MH E-3, E-4, E-5 & E-7 SIMILAR
2. FOR NEW MH DETAILS SEE NOTE 3, SHT. G1
3. ABANDON EXISTING SEWER & MANHOLES. SEE SPECS.

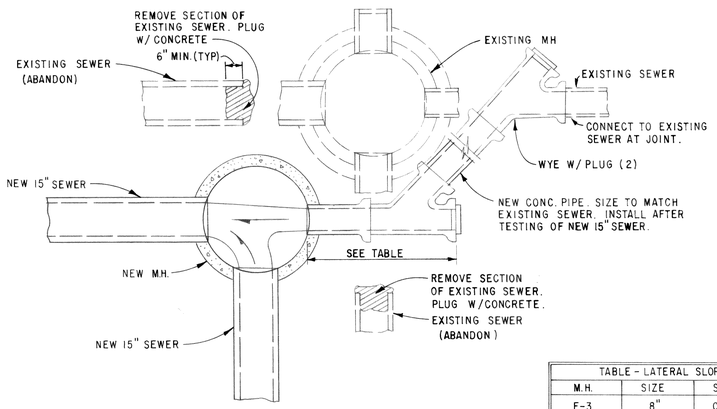

TABLE - LATERAL SLOPES		
M.H.	SIZE	SLOPE
E-3	8"	0.40 %
E-4	12"	0.90 %
E-5	8"	0.65 %
E-7	12"	0.43 %

NEW MANHOLE CONNECTION TO EXISTING SEWER DETAIL (1 / U4A)

NOT TO SCALE

1. INSTALL NEW MH OVER EXISTING 8" SEWER WITHOUT DISRUPTING SERVICE.
2. ABANDON EXISTING SEWER AND PLUG W/ CONCRETE AFTER TESTING OF NEW 15" SEWER.
3. FOR NEW M.H. DETAILS SEE NOTE 3, SHT. G1

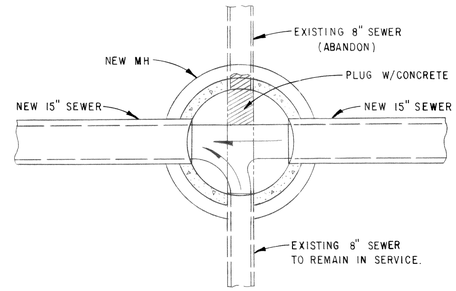

MANHOLE E-2 (3 / U4A)

NOT TO SCALE

1. INSTALL NEW M.H. OVER EXISTING 15" SEWER WITHOUT DISRUPTING SERVICE.
2. ABANDON EXISTING SEWER AND PLUG W/CONCRETE AFTER TESTING OF NEW 15" SEWER.
3. FOR NEW M.H. DETAILS SEE NOTE 3, SHT. G1 EXCEPT USE CAST IN PLACE BASE.

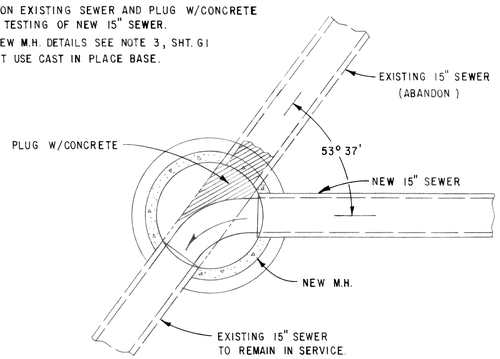

MANHOLE E-1 (2 / U4A)

NOT TO SCALE

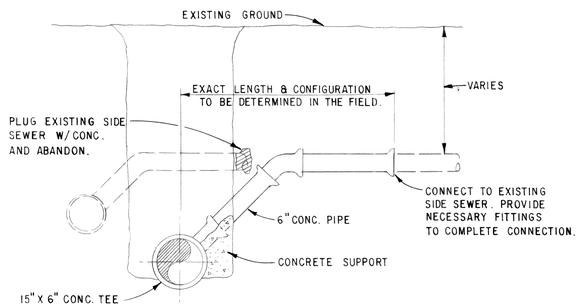

SIDE SEWER RECONNECTION (4 / U4A)

NOT TO SCALE

TED STRICKLIN STATE OF WASHINGTON 9683 REGISTERED PROFESSIONAL ENGINEER

DATE	NO.	REVISION	BY
NOV. 72	1	ADDENDUM 1	

DESIGNED T.S. | DRAWN J.M.H. | CHECKED RVH | APPROVED Dennis N. Priebe | SCALE AS SHOWN | DATE NOV. 1972 | FILE 71-S-425.022

Stevens, Thompson & Runyan, Inc.
Engineers/Planners
PORTLAND SEATTLE BOISE

TOWN OF FERNDALE, WASHINGTON
AXTON ROAD INTERCEPTOR
SCHEDULE II

SEWER DETAILS

MICROFILMED

U9 / 9

00210.046 2-7-00 KR

SHANNON & CO.