2' SQUARE CONCRETE BLOCK TO ENCASE CLEAN-OUT. IN AREAS WHERE CLEAN-OUT OCCURS IN ASPHALT, THIS BLOCK IS TO BE LEFT APPROX. 1 1/2" LOW TO ALLOW FOR AN ASPHALT TOPPING OF LIKE MIXTURE AS THE SURROUNDING AREA. IF CLEAN-OUT OCCURS IN CONCRETE OR IN SOME TYPE OF SOIL, THE BLOCK IS TO BE MADE THE FULL 1' DEPTH AND FLUSH WITH THE SURROUNDING SURFACE.

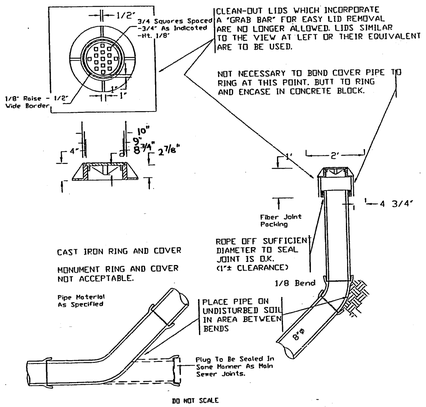


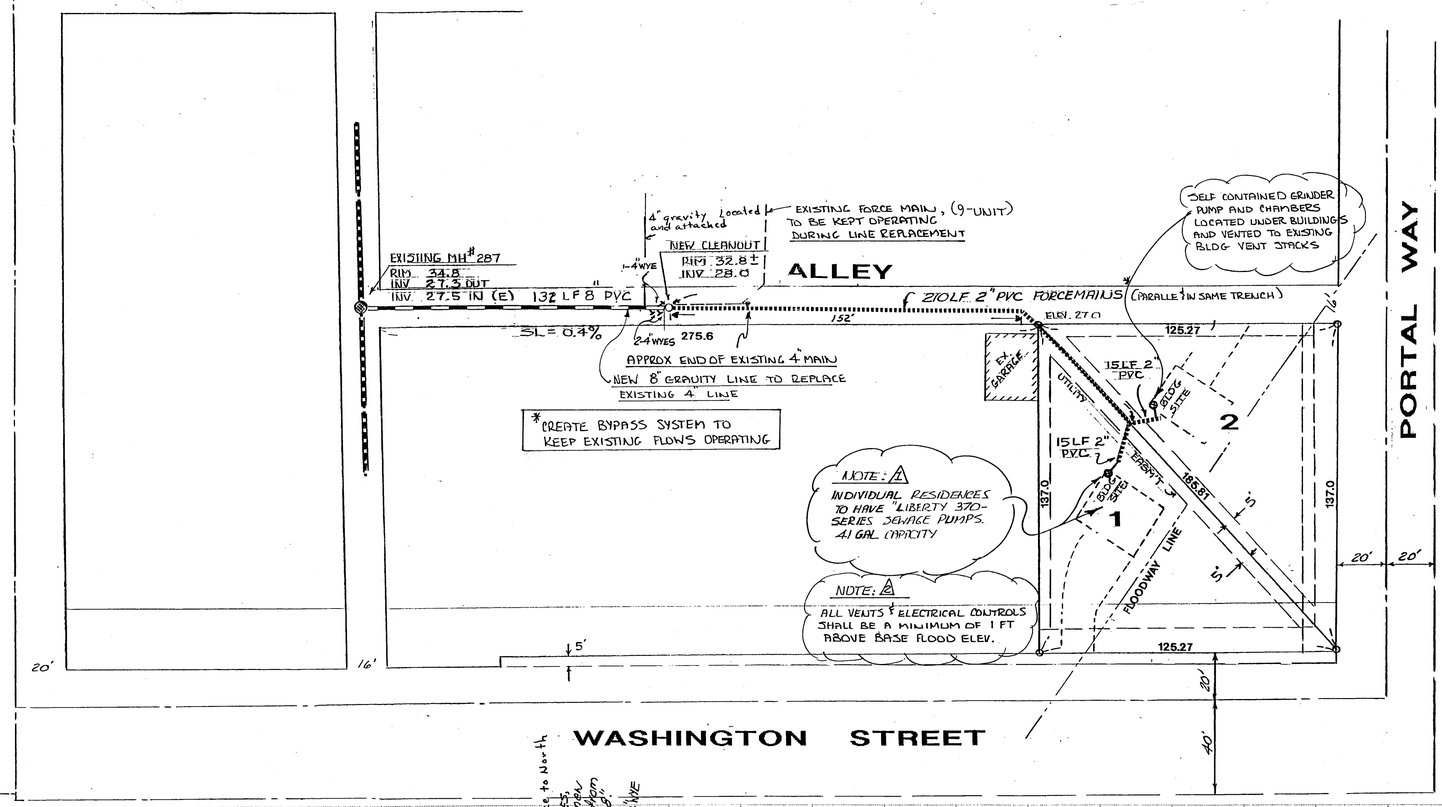


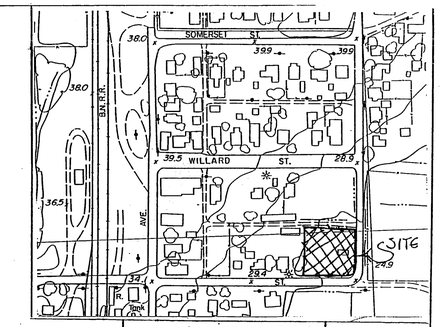


## GENERAL NOTES:

**Bank-Run Gravel for Trench Backfill.** Whenever a trench is excavated in the existing or newly-paved roadway, sidewalk or other areas where minor settlement would be detrimental, the entire trench shall be backfilled with Bank-Run Gravel, Class "B", and compacted to a 95 percent density as defined by ASTM D-1556. Selected native materials may be used for trench backfill in other areas if approved by the Public Works Director.

**Joints and Infiltration.** The method of making joints and materials used shall be included in the specifications. Leakage tests shall be according to Washington State Department of Transportation Standard Specification for Road, Bridge and Municipal · construction SE-7-17.3(4)F for non-air-permeable materials and SE-7-17.3(4)D for air-permeable materials.

**Connection to Existing Sewer Main.** When a sewer service or main must be connected to an existing sewer main, installation shall conform to City of Ferndale Standard Detail SS-12.

**Specifications for Sewer Pipe.** The following specifications are to be used in conjunction with the Standard Specifications for Road, Bridge, and Municipal Construction.

Material to be used for bedding of these flexible conduits shall conform to materials listed in WSDOT Standard Specifications. No bedding material shall be used unless accepted by the Public Works Director. Samples shall be submitted by the Contractor at least 72 hours in advance of its intended use to enable it to be inspected and tested.

**Material.** Any generally accepted material for sewers will be given consideration, but the material selected should be adapted to local conditions, such as characteristics of industrial wastes, possibility of septicity , soil characteristics, exceptionally-heavy external loadings, abrasion, and similar problems.

Material and installation specifications for all pipe, except cleanouts, shall conform to the Standard Specifications, current edition. Cleanouts shall be according to City of Ferndale Standard Details SS-5 (DOT B-18b). Unless otherwise stated, all materials specifications shall conform to the Standard Specifications, current edition. Requirements shall be set forth in the specifications for the pipe and methods of bedding and backfilling so as not to damage the pipe or its joints, impede cleaning operations and future tapping, nor create excessive side fill pressure or ovulation of the pipe, nor seriously impair flow capacity.

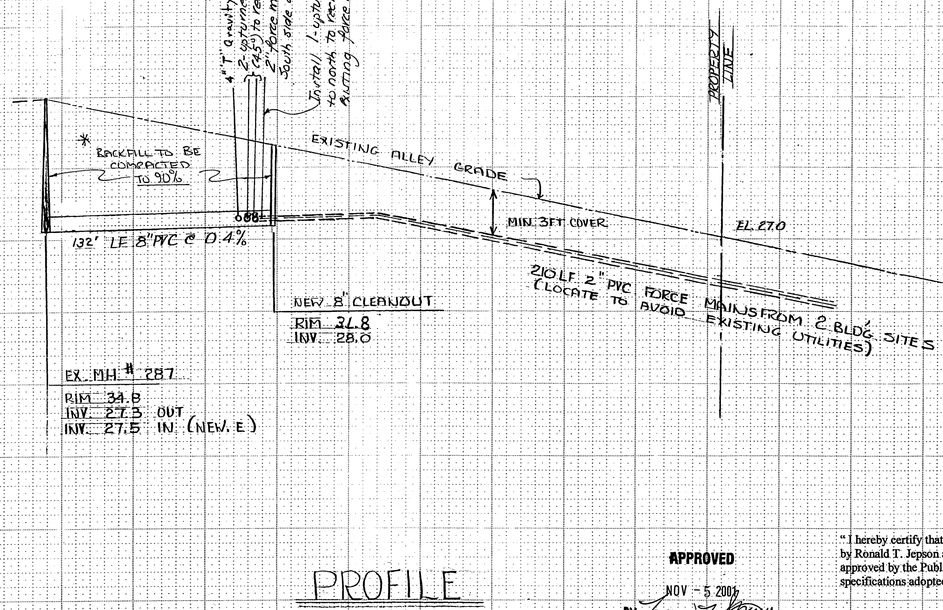


PROFILE
HORIZ. 1" = 40
VERT. 1" = 4

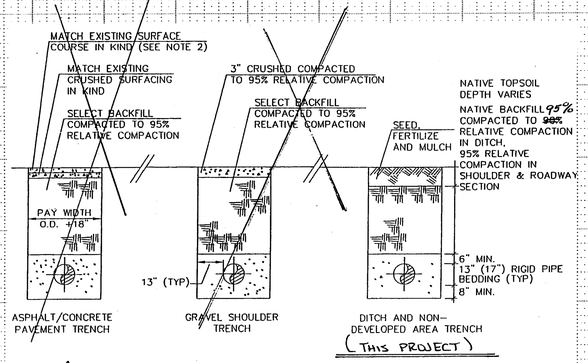


NOTES: ⚠ 1. NATIVE BACKFILL SHALL BE COMPACTED TO 90% RELATIVE COMPACTION.
2. SELECT BACKFILL/CRUSHED SURFACE COURSE SHALL BE COMPACTED TO 95% COMPACTION.
3. PAVEMENT SHALL BE SAW CUT, TACKED, AND COMPACTED TO 92% OF ABSOLUTE DENSITY.
4. P.C.C. REPLACEMENT SHALL BE 2" GREATER THAN EXISTING COURSE, 7" MINIMUM, 6.5 P.C.C. (HES – AIR ENTRAINED)
5. ALL TRENCH RESTORATION SHALL MEET CITY STANDARDS.

NOT TO SCALE

TYPICAL INDIVIDUAL PUMP SYSTEM

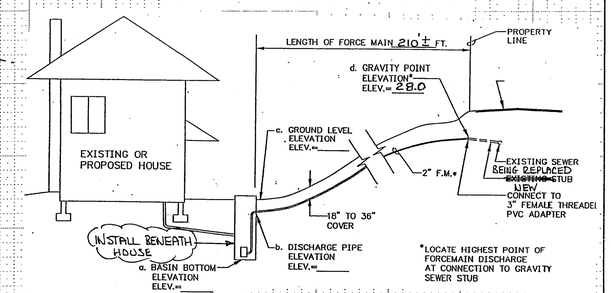


APPROVED
NOV - 5 2001
BY CITY OF FERNDALE

"I hereby certify that the improvements in the Three Legs Short Plat have been inspected by Ronald T. Jepson and Associates and constructed in conformance with the plans approved by the Public Works Director for said development and the general specifications adopted by the City of Ferndale Department of Public Works."

Aug 02 01

RONALD T. JEPSON — STATE OF WASHINGTON — 8361 — REGISTERED PROFESSIONAL ENGINEER — EXPIRES 2/01/2001 — Oct 18, 2000

RONALD T. JEPSON — STATE OF WASHINGTON — 8361 — REGISTERED PROFESSIONAL LAND SURVEYOR — EXPIRES 2/01/2002 — Oct 18, 2000

"AS-BUILT"

# RONALD T. JEPSON & ASSOC.

REGISTERED PROFESSIONAL ENGINEERS AND LAND SURVEYORS 222 GRAND AVE., SUITE C / BELLINGHAM, WA 98225 / (206) 733-5760

SCALE 1"=50' DATE Oct 6, 00
DRAWN BY R.T.J.
CHECKED BY:
APPROVED:

REVISIONS
JUL 19/01 "AS-BUILT" TAU

CLIENT
MR DAN TAYLOR
(THREELEGS DEV. COMPANY)

SANITARY SEWER SERVICE TO THREELEGS SHORT PLAT

SHEET 1/1

JOB NO. 00124

00434.pdf 5/17/12 CL