FLEXSPACE
CIVIL IMPROVEMENTS
BEING A PORTION OF THE NE 1/4, NW 1/4, SECTION 17, TOWNSHIP 39 NORTH, RANGE 2 EAST OF W.M.

LEGEND

- = FOUND CONCRETE MONUMENT
- = FOUND 1" IRON PIPE MARKED "LS.9642"
- = FOUND NAIL & SHINER/FLASHER
- = EXISTING GAS LOCATE POST
- = EXISTING CATCH BASIN (TYPE I)
- = EXISTING CATCH BASIN (TYPE 2)
- = EXISTING SD CLEANOUT
- = EXIST SANITARY SEWER MANHOLE
- = EXISTING SANITARY SEWER CLEANOUT
- = PROPOSED SEWER CLEANOUT
- = PROPOSED SEWER MANHOLE
- = EXISTING WATER BLOW-OFF VALVE
- = EXISTING WATER METER BOX
- = EXISTING WATER VALVE
- = EXISTING FIRE HYDRANT
- = PROPOSED FIRE HYDRANT
- = PROPOSED FIRE DEPT CONNECTION
- = PROPOSED POST INDICATOR VALVE
- = PROPOSED WATER METER/BOX
- = PROPOSED RAINLEADER/DOWNSPOUT
- = PROPOSED STORM DRAIN CLEANOUT
- = PROPOSED STORM DRAIN CATCH BASIN
- = PROPOSED STORM DRAIN MANHOLE (TYPE 2)
- = EXISTING POWER METER/STRUCTURE
- = EXISTING POWER VAULT
- = EXISTING POWER/AND OR UTILITY POLE
- = EXISTING GUY WIRE
- = EXISTING ELECTRICAL J-BOX
- = EXISTING TELEPHONE PEDESTAL
- = EXISTING NATURAL GAS REGULATOR (NGR)
- = EXISTING SIGN
- = PROPOSED SIGN
- = PROPOSED ASPHALT PAVEMENT REPAIR
- = PROPOSED ASPHALT SURFACING
- = PROPOSED IMPERMEABLE CONCRETE
- = EXISTING EDGE OF ASPHALT PAVEMENT
- = EXISTING EDGE OF CONCRETE PAVEMENT OR CURI
- = EXISTING EDGE OF GRAVEL SURFACING
- = EXISTING FIBER OPTIC LINE
- = EXISTING OVERHEAD POWER
- = EXISTING UNDERGROUND POWER
- = EXISTING UNDERGROUND PHONE
- = EXISTING OVERHEAD UTILITES (UNKNOWN)
- = EXISTING UNDERGROUND TV CABLE
- = EXISTING GAS MAIN
- = EXISTING WATER LINE
- = EXISTING SANITARY SEWER LINE
- = EXISTING STORM DRAIN LINE
- = EXISTING WOOD FENCE
- = EXISTING CHAIN LINK FENCE
- = PROPOSED ORANGE CONSTRUCTION FENCE
- = EXISTING CONTOUR (INDEX)
- = EXISTING CONTOUR (NORMAL)
- = EXISTING TOP OF SLOPE
- = EXISTING TOE OF SLOPE
- = EXISTING EASEMENT LINE
- = PROPOSED EASTMENT LINE
- = EXISTING PROPERTY LINE
- = EXISTING ROAD CENTER LINE
- = EXISTING SECTION LINE
- = PROPOSED STORM DRAIN LINE (SOLID WALL)
- = PROPOSED PERFORATED STORM DRAIN PIPE
- = PROPOSED DOWNSPOUT COLLECTOR
- = PROPOSED SANITARY SEWER MAIN
- = PROPOSED WATERMAIN
- = PROPOSED WATER SERVICE LINE
- = PROPOSED FIRE SUPPRESSION LINE
- = PROPOSED C.I.P RETAINING WALL
- = PROPOSED SECONDARY POWER LINE
- = DETAIL CALLOUT

SHEET INDEX

C1	COVER SHEET
C2	EXISTING CONDITIONS
C3	PHASING PLAN
C4	TEMPORARY EROSION AND SEDIMENTATION CONTROL PLAN
C5	TEMPORARY EROSION AND SEDIMENTATION CONTROL DETAILS AND SWPPP
C6	SITE PLAN (WEST)
C7	SITE PLAN (EAST)
C8	DRAINAGE PLAN (WEST)
C9	DRAINAGE PLAN (EAST)
C10	GRADING PLAN (WEST)
C11	GRADING PLAN (EAST)
C12	UTILITY PLAN OVERVIEW
C13	UTILITY PLAN (WEST)
C14	UTILITY PLAN (EAST)
C15	SITE SECTIONS (BUILDING TO BUILDING)
C16	SITE SECTIONS (BUILDING TO BUILDING)
C17	PAVING AND DRAINAGE DETAILS
C18	DRAINAGE DETAILS
C18	SANITARY SEWER DETAILS
C20	SANITARY SEWER AND WATER DETAILS
C21	WATER DETAILS
C22	WATER DETAILS
C23	SITE SECTIONS (BUILDING TO PROPERTY LINE)
C24	SITE SECTIONS (BUILDING TO PROPERTY LINE)
L1	LANDSCAPE PLANS
L2	LANDSCAPE DETAILS
L3	LANDSCAPE DETAILS
S1 OF 2	RETAINING WALL PLANS
S2 OF 2	RETAINING WALL PLANS

SURVEY

SURVEYOR'S NOTES:

1. "○" DENOTES 5/8 INCH REBAR WITH 1 INCH PLASTIC CAP MARKED "NWS & GPS 49276 & 50982" SET PER THE GENERAL AND SPECIFIC BINDING SITE PLAN No.1 FOR ALPINE INVESTMENTS, LLC.
2. "⊗" DENOTES CAPPED REBAR MARKED "LS. 18074" FOUND BY THIS SURVEY.
3. "✳" DENOTES CALCULATED POINT ONLY.
4. THIS SURVEY WAS PERFORMED BY STANDARD FIELD TRAVERSE USING A LEICA TS12 TOTAL STATION WITH A CARLSON SURVEYOR PLUS COLLECTOR/FIELD COMPUTER IN JANUARY AND FEBRUARY OF 2018.
5. THIS SURVEY TIED INTO CONTROL POINTS FROM OUR PREVIOUS WORK WITHIN THE AREA AND LOT CORNERS AS SHOWN AND RELIED UPON THE CITY OF FERNDALE SURVEY MONUMENT NETWORK FOR BASIS OF BEARINGS.
6. THIS SURVEY WAS COMPLETED WITHOUT THE BENEFIT OF A CURRENT TITLE REPORT AND DOES NOT PURPORT TO SHOW ANY OR ALL EASEMENTS THAT A CURRENT TITLE REPORT MIGHT REVEAL.
7. VERTICAL DATUM IS PER THE CITY OF FERNDALE MONUMENT NETWORK (NGVD29).
8. BASIS OF BEARINGS = CITY OF FERNDALE SURVEY MONUMENT NETWORK.
9. CONTOUR INTERVALS ARE 1 FOOT. CONTOURS ARE COMPUTER GENERATED FROM GROUND FIELD TOPOGRAPHY GATHERED FOR THIS SURVEY.
10. NORTHWEST SURVEYING & GPS INC. ASSUMES NO LIABILITY FOR ANY SUBSURFACE CONDITIONS OR UTILITIES NOT SHOWN HEREON. UNDERGROUND UTILITIES ARE KNOWN TO EXIST WITHIN THE AREA OF CONSTRUCTION. THE LOCATION OF EXISTING UTILITIES SHOWN ARE BASED UPON FIELD SURVEY AND VISUAL IDENTIFICATION. ALL EXISTING UTILITIES MAY NOT BE INDICATED WITHIN THE CONSTRUCTION DOCUMENTS. IT IS THE RESPONSIBILITY OF THE CONTRACTOR TO FIELD VERIFY ANY AND ALL UNDERGROUND UTILITY LOCATIONS PRIOR TO CONSTRUCTION AND TO ALERT THE ENGINEER AND OWNER PROMPTLY IN CASE OF CONFLICT.

VICINITY MAP

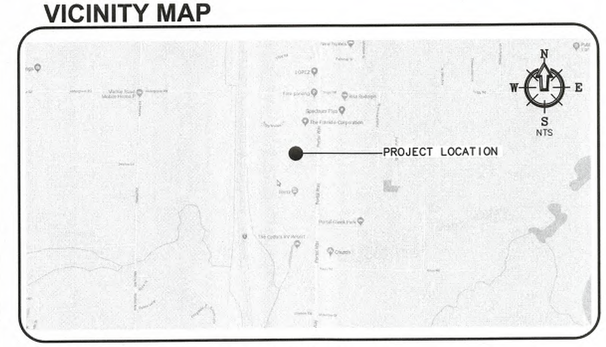

PROJECT INFORMATION

OWNER
PIONEER FLEXSPACE, LLC
4040 MT. BAKER HWY
EVERSON, WA 98247
(360) 815-8806

CONTRACTOR
PIONEER POST FRAME, INC
DOUG SCOGGINS
6208 PORTAL WAY
FERNDALE, WA 98248
(360) 380-4436
dougscoggins@comcast.net

PUGET SOUND ENERGY
LIZ BARTLETT
1600 PARK LANE
BURLINGTON, WA 98233
425-466-2251
elizabeth.bartlett@pse.com

NATURAL GAS
BRANDON HAUGNESS
CASCADE NATURAL GAS
(360) 788-2362
brandon.haugness@cngc.com

CIVIL ENGINEER
FREELAND & ASSOCIATES, INC.
TONY FREELAND, PE
220 W. CHAMPION ST., STE 200
BELLINGHAM, WA 98225
PHONE (360) 650-1408
tfreeland@freelandengineering.com

SURVEYOR
NORTHWEST SURVEYING & GPS, INC.
BRETT DE VRIES, PLS
407 5TH STREET
LYNDEN, WA 98264
PHONE (360) 815-0291

ARCHITECT
HAVEN DESIGN WORKSHOP
SEAN HEGSTAD, AP
5828 2nd AVENUE, STE #101
FERNDALE, WA 98248
(360) 527-2840
sean@haven-dw.com

STRUCTURAL (BLDG)
MADRONA ENGINEERING, LLC
CRAIG OLSON, P.E.
1315 TWEEDSMUIR COURT
BELLINGHAM, WA 98226
(360) 510-0480
craig@madronaengineering.com

TAX PARCEL NO.
390217 230414 0000
390217 183414 0000

COMMUNICATIONS
BARB ROBINSON
FRONTIER
(360) 393-3131
brobinson@ftr.com

COMMUNICATIONS
CASEY JONES
COMCAST
(360) 527-8243
casey_jones@cable.comcast.com

STRUCTURAL (WALL)
BRADLEY ENGINEERING, INC.
DAVID BRADLEY, P.E.
(360) 752-5795

GENERAL NOTES

GENERAL REQUIREMENTS

1. ALL WORK SHALL BE PERFORMED IN ACCORDANCE WITH THE STANDARD SPECIFICATIONS FOR ROAD, BRIDGE AND MUNICIPAL CONSTRUCTION, CURRENT EDITION AND THE CITY OF FERNDALE DEVELOPMENT STANDARDS AND SHALL BE SUBJECT TO APPROVAL BY THE CITY OF FERNDALE. IN THE EVENT OF A CONFLICT, THE MORE STRINGENT REQUIREMENT SHALL APPLY. A WRITTEN CONTRACT BETWEEN THE PROJECT OWNER AND A LICENSED GEOTECHNICAL FIRM IS REQUIRE AND WILL BE PROVIDED AT OR BEFORE THE PROJECT PRECONSTRUCTION MEETING. ALL SOIL OBSERVATIONS AND COMPACTION TESTING PER THE CITY OF FERNDALE STANDARDS WILL REQUIRED TO PROCEED WITH CONSTRUCTION AND/OR OBTAIN FINAL PROJECT ACCEPTANCE. A LIST OF MATERIAL TESTING AND COMPACTION TESTING REQUIREMENTS CAN BE PROVIDED BY THE CITY ANYTIME AT OR BEFORE THE PROJECTS SCHEDULED PRECONSTRUCTION MEETING. OBTAINING THIS LIST OF REQUIREMENTS PRIOR TO THE PROJECT PRECONSTRUCTION MEETING IS ADVISED TO DETERMINE THE SIZE, SCOPE AND COSTS ASSOCIATED WITH YOUR PROJECT.
2. PRIOR TO THE START OF CONSTRUCTION, THE CONTRACTOR SHALL VERIFY THAT ALL REQUIRED PERMITS AND APPROVALS HAVE BEEN OBTAINED. NO CONSTRUCTION OR FABRICATION SHALL BEGIN UNTIL THE CONTRACTOR HAS RECEIVED AND THOROUGHLY REVIEWS ALL PLANS AND OTHER CONSTRUCTION DOCUMENTS APPROVED BY ALL OF THE PERMITTING AUTHORITIES. THROUGHOUT THE PERIOD OF CONSTRUCTION, CONTRACTOR SHALL COMPLY WITH THE THE TERMS OF ALL PERMITS.
3. THE CONTRACTOR SHALL BE RESPONSIBLE FOR DETERMINING SUB-SURFACE CONDITIONS AND SOILS TYPES.
4. THE SURVEYOR SHALL LAY OUT AND SET ANY CONSTRUCTION STAKES AND MARKS NEEDED TO ESTABLISH THE LINES, GRADES, SLOPES OR CROSS-SECTIONS AS SHOWN ON THE PLANS OR AS STAKED BY THE ENGINEER.
5. THE CONTRACTOR SHALL PROTECT ALL PRIVATE AND PUBLIC UTILITIES FROM DAMAGE RESULTING FROM THE WORK. CONTRACTOR SHALL RESTORE ALL PRIVATE AND PUBLIC PROPERTY DISRUPTED BY THE PROJECT IMMEDIATELY AFTER CONSTRUCTION.
6. WHEN THE CONTRACTOR CONSIDERS THE WORK PHYSICALLY COMPLETE AND READY FOR FINAL INSPECTION, THE CONTRACTOR SHALL REQUEST THAT CITY INSPECTOR SCHEDULE A FINAL INSPECTION. THE INSPECTOR WILL MAKE A FINAL INSPECTION AND NOTIFY THE CONTRACTOR IN WRITING OF ALL PARTICULARS IN WHICH THE FINAL INSPECTION REVEALS THE WORK INCOMPLETE OR UNACCEPTABLE. THE CONTRACTOR SHALL IMMEDIATELY TAKE SUCH CORRECTIVE MEASURES AS ARE NECESSARY TO REMEDY THE LISTED DEFICIENCIES.
7. BEFORE ANY CONSTRUCTION OR DEVELOPMENT ACTIVITY A PRE-CONSTRUCTION MEETING MUST BE HELD BETWEEN THE CONTRACTOR, OWNER, CITY ENGINEER AND PROJECT ENGINEER. (MINIMUM 3 DAYS PRIOR TO STARTING WORK)
8. A COPY OF THESE APPROVED PLANS MUST BE ON THE JOB SITE WHENEVER CONSTRUCTION IS IN PROGRESS.
9. THE CONTRACTOR SHALL BE RESPONSIBLE FOR PROVIDING ADEQUATE SAFEGUARDS, SAFETY DEVICES, PROTECTIVE EQUIPMENT, FLAGGERS, AND ANY OTHER NEEDED ACTIONS TO PROTECT THE LIFE, HEALTH AND SAFETY OF THE PUBLIC, AND TO PROTECT PROPERTY IN CONNECTION WITH THE PERFORMANCE OF WORK COVERED BY THE CONTRACTOR. ANY WORK WITHIN THE TRAVELED RIGHT-OF-WAY THAT MAY INTERRUPT NORMAL TRAFFIC FLOW SHALL REQUIRE AT LEAST ONE FLAGGER FOR EACH LANE OF TRAFFIC AFFECTED. ALL SECTIONS OF THE WSDOT STANDARD SPECIFICATIONS 1-07.23-PUBLIC CONVENIENCE AND SAFETY, SHALL APPLY.
10. PROOF OF LIABILITY INSURANCE SHALL BE SUBMITTED TO THE CITY PRIOR TO THE PRE- CONSTRUCTION MEETING.
11. NO WORK SHALL OCCUR BETWEEN 7:00 PM & 7:00 AM. NO EXCEPTIONS.
12. ALL HARD SURFACED PAVEMENTS MUST BE REPAIRED AT THE CLOSE OF EACH WORK DAY. THE REPAIRS CAN BE TEMPORARY WITH ASPHALT COLD MIX OR PERMANENT WITH HOT MIX ASPHALT OR CONCRETE. ALL REPAIRS SHALL BE ACCORDING TO CITY OF FERNDALE DRAWING R-11.
13. ALL WORK MUST BE INSPECTED BY A REPRESENTATIVE OF THE CITY OF FERNDALE ENGINEERING DIVISION, AND 24 HOURS NOTICE MUST BE GIVEN PRIOR TO STARTING WORK OR TO SCHEDULE INSPECTIONS IN ACCORDANCE WITH SECTION 302 OF THE DEVELOPMENT STANDARDS.
14. THE CONTRACTOR SHALL INFORM THE ENGINEER AND OBTAIN APPROVAL FROM THE CITY OF FERNDALE PUBLIC WORKS DIRECTOR OF ANY PROPOSED DEVIATION FROM THE APPROVED PLANS PRIOR TO CONSTRUCTION OF THE REVISED IMPROVEMENTS. THE CONTRACTOR SHALL KEEP RECORDS OF ALL DEVIATIONS AND SHALL FORWARD THEM TO THE ENGINEER AND TO THE CITY OF FERNDALE PUBLIC WORKS DEPARTMENT.
15. AS-BUILT DATA SHALL BE PROVIDED TO THE CITY OF FERNDALE UPON COMPLETION OF CONSTRUCTION AND PROVIDED IN CITY OF FERNDALE DATUM-VERTICAL (NGVD 29) AND HORIZONTAL (NAD 83/91). CONTACT THE CITY FOR MORE INFORMATION ON SUBMITTAL REQUIREMENTS.
16. METHOD OF SURVEY, SURVEY DATA, AND SURVEY EQUIPMENT UTILIZED TO CREATE THE BASE MAP/EXISTING CONDITIONS ARE NOTED ON SHEET C2 OF THIS PLAN SET.
17. COMPLETE PLAT SURVEY STAKING AND MONUMENTATION PER CITY STANDARD REQUIRED PRIOR TO FINAL ACCEPTANCE.

GENERAL REQUIREMENTS CONTINUED

17. THE LOCATIONS OF UNDERGROUND FACILITIES SHOWN ON THESE PLANS ARE BASED ON FIELD SURVEYS AND LOCAL UTILITY COMPANY RECORDS. IT SHALL BE THE CONTRACTOR'S FULL RESPONSIBILITY TO CONTACT THE VARIOUS UTILITY COMPANIES TO LOCATE THEIR FACILITIES PRIOR TO STARTING CONSTRUCTION. NO EXTRA COMPENSATION SHALL BE PAID TO THE CONTRACTOR FOR DAMAGE AND REPAIR TO THESE FACILITIES CAUSED BY HIS WORK FORCE. CALL 1-800-424-5555 FOR UTILITY LOCATE 48 HOURS PRIOR TO WORK, CONTRACT TO HOLD. THE CONTRACTOR SHALL NOTIFY THE ENGINEER PROMPTLY OF ANY CONFLICT. THE CONTRACTOR SHALL BE RESPONSIBLE FOR MAINTAINING THE INTEGRITY OF ALL ADJACENT UTILITIES WHICH INCLUDE BUT ARE NOT LIMITED TO: WATER, SEWER, STORM SEWER, POWER, TELEPHONE, CABLE TV, IRRIGATION, AND STREET LIGHTING. CONTRACTOR SHALL RESTORE ALL PRIVATE AND PUBLIC PROPERTY DISTURBED BY THE PROJECT UPON COMPLETION OF THE PROJECT.
18. A REVOCABLE ENCROACHMENT PERMIT SHALL BE OBTAINED PRIOR TO COMMENCING WORK IN THE PUBLIC RIGHT-OF-WAY.
19. ALL UNDERGROUND UTILITIES SHOWN ON THIS PLAN ARE IN APPROXIMATE LOCATIONS ONLY AND THERE IS NO GUARANTEE THAT ALL UTILITIES ON THIS SITE ARE SHOWN. THE CONTRACTOR SHALL FIELD VERIFY THE LOCATIONS OF ALL UTILITIES PRIOR TO CONSTRUCTION. CONTACT THE WASHINGTON STATE UTILITY LOCATED CENTER AT LEAST 48 HOURS BEFORE CONSTRUCTION.
20. THE CITY OF FERNDALE DOES NOT GUARANTEE THAT AS-BUILT INFORMATION ON RECORD FOR EXISTING UTILITIES ARE CORRECT. THE CITY REQUIRES THAT THE PROJECT OWNER/ENGINEER OF RECORD POT HOLE ALL EXISTING UTILITIES TO AVOID COSTLY DELAYS OR DEVIATION FROM YOUR APPROVED PLANS. ALL COSTS ASSOCIATED TO THESES DELAYS AND/OR DEVIATIONS FROM THE APPROVED PLANS DUE TO INACCURATE INFORMATION WILL BE THE RESPONSIBILITY OF THE PROJECT OWNER/CONTCTARATION, NOT THE CITY OF FERNDALE.

BASES

1. GRAVEL BASES AND BALLAST MAXIMUM PARTICLE SIZE PASSING THE U.S. NO. 200 SIEVE SHALL NOT EXCEED 5%
2. BALLAST, GRAVEL BASE AND CRUSHED SURFACING SHALL BE COMPACTED TO AT LEAST 95% OF ITS MAXIMUM DRY DENSITY.
3. THE CONTRACTOR OR PROPONENT SHALL BE RESPONSIBLE FOR ALL COMPACTION TESTING. PRIOR TO IMPORTING OF MATERIAL FOR BASE AND CSTC THE CONTRACTOR SHALL PROVIDE EVIDENCE OF SATISFACTORY PASSING GRADING AND DEGRADATION TEST RESULTS TO THE ENGINEER.

PAVEMENTS

1. WHERE SHOWN ON THE PLANS, PAVEMENT MARKINGS SHALL BE OBLITERATED UNTIL BLEMISHES CAUSED BY THE PAVEMENT MARKING REMOVAL CONFORM TO THE COLORATION OF THE ADJACENT PAVEMENT.
2. SOIL RESIDUAL HERBICIDE SHALL BE PLACED WITHIN 24 HOURS OF PAVING.
3. A TACK COAT OF ASPHALT SHALL BE APPLIED BETWEEN ALL COURSES OF ASPHALT.
4. ALL PAVEMENT REPAIR SHALL BE SAW-CUT BEFORE REMOVAL. AR-4000W SHALL BE APPLIED TO ALL EDGES OF EXISTING PAVEMENT.
5. ASPHALT CONCRETE PAVEMENT SHALL NOT BE PLACED NOR COMPACTED DURING HOURS OF DARKNESS.
6. SUBGRADE SHALL BE CERTIFIED IN WRITTING BY THE ENGINEER PRIOR TO PAVING.

WATER MAINS

1. TEST PRESSURE FOR WATERMAIN ACCEPTANCE SHALL BE 225 p.s.i. AT THE HIGHEST POINT ON THE WATER LINE AND SHALL BE DONE ACCORDING TO CITY OF FERNDALE REQUIREMENTS. ALL PURIFICATION ACCEPTANCE TESTING SHALL BE ACCORDING TO CITY OF FERNDALE REQUIREMENTS. THE PIPE WILL NOT PASS UNLESS A ZERO BACTERIA COUNT IS OBTAINED FOR TWO CONSECUTIVE TESTS 24 HOURS APART. SEPARATION MUST BE MAINTAINED BETWEEN THE NEW WATER MAIN AND THE CITY'S WATER MAIN UNTIL PRESSURE AND BACTERIA TESTING ARE APPROVED BY THE CITY OF FERNDALE.
2. ALL WORK AND MATERIALS SHALL CONFORM TO THE REQUIREMENTS OF THE CITY OF FERNDALE DEVELOPMENT STANDARDS, SECTIONS 702 AND 705 AND THE MOST RECENT VERSION OF WSDOT STANDARD SPECIFICATIONS.
3. ALL BACKFILL SHALL BE IMPORTED GRAVEL AND SHALL CONFORM TO SECTION 2-09 OF THE STANDARD SPECIFICATIONS FOR ROAD, BRIDGE AND MUNICIPAL CONSTRUCTION.
4. ALL PIPE SHALL HAVE A MINIMUM COVER OF 3.0 FEET.

EARTHWORK

1. THE CONTRACTOR SHALL CLEAR, GRUB AND CLEAN UP THOSE AREAS SHOWN ON THE PLANS.

EARTHWORK CONTINUED

2. THE CONTRACTOR SHALL EXCAVATE AND GRADE TO THE ALIGNMENT, GRADE AND CROSS-SECTIONS SHOWN IN THE PLANS OR ESTABLISHED BY THE ENGINEER. IN ACCORDANCE WITH THE PROJECT GEOTECHNICAL ENGINEERING STUDY.
3. MAXIMUM DENSITY AND OPTIMUM MOISTURE FOR GRANULAR MATERIALS WILL BE DETERMINED USING ASTM D-1557 TEST METHOD.
4. THE UNSUITABLE MATERIAL NOT FIT FOR A SUB-GRADE SHALL BE EXCAVATED TO THE BOUNDARIES SET BY THE ENGINEER AND REPLACED WITH A SUITABLE BACKFILL MATERIAL.

STORM DRAINAGE

1. ALL PIPE AND APPURTENANCES SHALL BE LAID ON A PROPERLY PREPARED FOUNDATION IN ACCORDANCE WITH WSDOT 7-08. THIS SHALL INCLUDE LEVELING AND COMPACTING THE TRENCH BOTTOM, THE TOP OF THE FOUNDATION MATERIAL AND ANY REQUIRED PIPE BEDDING, TO A UNIFORM GRADE SO THAT THE ENTIRE PIPE IS SUPPORTED BY A UNIFORMLY DENSE UNYIELDING BASE.
2. ALL DRAINAGE STRUCTURES, SUCH AS CATCH BASINS AND MANHOLES, NOT LOCATED WITHIN A TRAVELED ROADWAY OR SIDEWALS, SHALL HAVE SOLID LOCKING LIDS. ALL DRAINAGE STRUCTURES ASSOCIATED WITH A PERMANENT RETENTION/DETENTION FACILITY SHALL HAVE SOLID LOCKING LIDS.
3. ALL CATCH BASIN GRATES SHALL INCLUDE THE STAMPING "OUTFALL TO STREAM, DUMP NO POLLUTANTS".
4. ALL DRIVEWAY CULVERTS LOCATED WITHIN THE RIGHT-OF-WAY SHALL BE OF SUFFICIENT LENGTH TO PROVIDE A MINIMUM 3:1 SLOPE FROM THE EDGE OF THE DRIVEWAY TO THE BOTTOM OF THE DITCH. CULVERTS SHALL HAVE BEVELED END SECTIONS PER WSDOT
5. THE CONTRACTOR IS RESPONSIBLE FOR COORDINATING THE LOCATIONS OF ALL STUB-OUT CONVEYANCE LINES WITH RESPECT TO THE UTILITIES (E.G. POWER, GAS, TELEPHONE, TELEVISION).

SANITARY SEWER SPECIFICAITONS

1. ALL WORK AND MATERIALS SHALL BE IN ACCORDANCE WITH THE STANDARD SPECIFICATIONS FOR ROAD, BRIDGE, AND MUNICIPAL CONSTRUCITON, CURRENT EDITION AND THE CITY OF FERNDALE DEVELOPMENT STANDARDS SECTON 5 AND SHALL BE SUBJECT TO APPROVAL BY THE CITY OF FERNDALE.
2. FOUR INCH THROUGH TWELVE-INCH PIPE SHALL BE PVC PIPE CONFORMING TO ASTM D-3034, SDR-35 OR EQUAL. PIPE JOINTS SHALL BE MADE WITH FLEXIBLE GASKETS CONFOMING TO THE REQUIREMENTS OF SECTION 7-17.3G (2)E OF THE STANDARD SPECIFICATIONS.
3. TRENCH EXCAVATION SHALL BE ACCORDING TO SECTION 7-08.3(1) OF THE STANDARD SPECIFICATIONS.
4. THE BEDDING SHALL BE PEA GRAVEL PER SS-1.
5. PIPE LAYING SHALL MEET THE REQUIREMENTS OF SECTION 7-08.3(2)B OF THE STANDARD SPECIFICATIONS.
6. ALL SIDE SEWERS SHALL BE CONSTRUCTED ACCORDING TO THE CITY OF FERNDALE DRAWINGS SS-6 THROUGH SS-8, AND SS-13. MARK EACH SERVICE WITH A WHITE 2-INCH DIAMER SCHEDULE 40 PVC PIPE WITH THE TOP PAINTED GREEN, STENCILED WITH THE WORD "SEWER" IN BLACK TEXT AND THE DEPTH NOTED ON THE MARKER TO THE SERVICE INVERT.
7. ALL TRENCH BACKFILL UNDER EXISTING OR FUTURE PAVING SHALL BE BANK RUN GRAVEL, CLASS "B" AND SHALL BE COMPACTED TO 95% OF MAXIMUM DENSITY.
8. ALL SEWER PIPE WILL BE PRESSURE TESTED AND WILL SCANNED BY MEANS OF A TV CAMERA PRIOR TO ACCEPTANCE BY THE CITY OF FERNDALE. ALL STRUCTURES AND CONVEYANCE WILL BE JETTED AND CLEANED PRIOR TO CALLING FOR INSPECTION. LINES TOO DIRTY FOR INSPECTION WILL REQUIRE A REINSPECTION, ADDITIONAL FEES WILL APPLY FOR REQUIRED REINSPECTION.
9. ALL MANHOLES WILL BE ACCORDING TO THE CITY OF FERNDALE STANDARD PLAN NO. SS-2. THROUGH SS-4 AND WSDOT MH TYPE 1 STANDARD PLAN B-15.20.01.
10. ALL CLEANOUTS SHALL BE ACCORDING TO CITY OF FERNDALE STANDARD PLAN NO. SS-5.
11. ALL HARD SURFACED PAVEMENTS MUST BE REPAIRED AT THE CLOSE OF EACH WORK DAY. THE REPAIRS CAN BE TEMPORARY WITH ASPHALT COLD MIX OR PERMANENT WITH HOT MIX ASPHALT OR CONCRETE.
12. ALL WORK MUST BE INSPECTED AND APPROVED BY A REPRESENTATIVE OF THE CITY OF FERNDALE PUBLIC WORKS, AND 24 HOURS NOTICE MUST BE GIVEN PRIOR TO STARTING WORK OR TO SCHEDULE INSPECTIONS. 13. ALL TESTING SHALL BE DONE IN THE PRESENCE AND UNDER THE SUPERVISION OF A REPRESENTATIVE OF THE CITY OF FERNDALE.

ABBREVIATIONS

1'/1"	ONE FOOT/ONE INCH
AC	ACRE
AD	ABSOLUTE VALUE OF THE ALGEBRAIC GRADE DIFFERENCE
AF#	AUDITORS FILE NUMBER
APPROX	APPROXIMATE
ASB/AB	AS-BUILT
ASPH	ASPHALT
BLDG	BUILDING
BMP	BEST MANAGEMENT PRACTICE
BNDRY	BOUNDARY
BVCS	BEGINNING OF VERTICAL CURVE STATION
BVCE	BEGINNING OF VERTICAL CURVE ELEVATION
C	COMPACT PARKING STALL
CC	CURB CUT
CB	CATCH BASIN
CL	CENTERLINE
CMP	CORRUGATED METAL PIPE
CNTRL	CONTROL
CO	CLEANOUT
COR	CORNER
CPP	CORRUGATED POLYETHYLENE PIPE
CONC	CONCRETE
CSTC	CRUSHED SURFACING TOP COURSE
CULV	CULVERT
ø	DIAMETER
DEMO	DEMOLITION
DI	DUCTILE IRON
DWGS	DRAWINGS
E	EAST
EA	EACH
EL/ELEV	ELEVATION
ENC	REVOCABLE ENCROACHMENT PERMIT
EP/EOP	EDGE OF PAVEMENT
ESMT	EASEMENT
EVCS	END OF VERTICAL CURVE STATION
EVCE	END OF VERTICAL CURVE ELEVATION
EX/EXIST	EXISTING
FDC	FIRE DEPARTMENT CONNECTION
FFE/FF	FINISH FLOOR ELEVATION
FG	FINISH GRADE
FH	FIRE HYDRANT
FND	FOUND
GND	GROUND
GUTT	GUTTER
HP	HIGH POINT
INV	INVERT
IE/I.E.	INVERT ELEVATION
IRRIG	IRRIGATION
LF	LINEAR FOOT
L.S.	LAND SURVEYOR
MAX	MAXIMUM
MIN	MINIMUM
MON	MONUMENT
NIC	NOT IN CONTRACT
N	NORTH
No./#	NUMBER
O.C.	ON CENTER
PC	POINT OF CURVATURE
PCL	PARCEL
PERF	PERFORATED
PI	POINT OF INTERSECTION
PIV	POST INDICATOR VALVE
POB	POINT OF BEGINNING
PP	POWER POLE
PROP	PROPERTY
K	LENGTH OF VERTICAL CURVE PER PERCENT GRADE DIFFERENCE
PT/POT	POINT OF TANGENCY
PVC	POLYVINYL CHLORIDE
PVI	POINT OF VERTICAL INFLECTION
PWR	POWER
R	RADIUS
R/C	REBAR WITH CAP
RCP	REINFORCED CONCRETE PIPE
RET	RETAINING
RIM	RIM
ROW	RIGHT-OF-WAY
RPP	REDUCED PRESSURE PRINCIPAL
RR	RAILROAD
S	SOUTH
SAN	SANITARY
SCH	SCHEDULE
SD	STORM DRAIN
SDCB	STORM DRAIN CATCH BASIN
SDCO	STORM DRAIN CLEANOUT
SDMH	STORM DRAIN MAN HOLE
SERV	SERVICE
STND/STD	STANDARD
SS	SANITARY SEWER
SSCO	SANITARY SEWER CLEANOUT
SSMH	SANITARY SEWER MANHOLE
ST	STREET
TBM	TEMPORARY BENCH MARK
TC	TOP OF CURB
TEL/TELE	TELEPHONE
TESC	TEMPORARY EROSION & SEDIMENTATION CONTROL
TP	TOP OF PAVEMENT
TS	TOP OF SIDEWALK
TW	TOP OF WALL
TYP	TYPICAL
UG	UNDERGROUND
VC	VERTICAL CURVE
VEG	VEGETATION
W	WEST
WA	WATER
W/IN	WITHIN
WSDOT	WASHINGTON STATE DEPARTMENT OF TRANSPORTATION

ENGINEER'S CERTIFICATION:
"I HEREBY CERTIFY THAT THE IMPROVEMENTS OF PIONEER FLEXSPACE (PHASE 5) HAVE BEEN INSPECTED BY FREELAND & ASSOCIATES, INC. AND CONSTRUCTED IN GENERAL CONFORMANCE WITH THE PLANS APPROVED BY PUBLIC WORKS DIRECTOR FOR SAID DEVELOPMENT AND THE GENERAL SPECIFICATIONS ADOPTED BY THE CITY OF FERNDALE DEPARTMENT OF PUBLIC WORKS."

BY: _____ DATE: 8-30-21

APPROVED
AUG 31 2021
CITY OF FERNDALE
PUBLIC WORKS DEPARTMENT

AS-BUILT DRAWING
AS-BUILT NOTE:
ONLY INFORMATION NOTED AS AS-BUILT "(AB)" HAS BEEN PROVIDED BY PROJECT SURVEYOR. DATE OF POINT FILES 10/1/2019, 10/18/2019, 10/23/2020, 07/12/2021. CONTRACTOR PROVIDED ADDITIONAL MEASURE DOWNS 10/21/2019.

220 West Champion Street, Suite 200 t: 360.650.1408
Bellingham, WA 98225 f: 360.650.1401
FREELAND & ASSOCIATES

REV:	DATE:	DESCRIPTION:	BY:

CLIENT: PIONEER POST FRAME
6208 PORTAL WAY
FERNDALE, WASHINGTON

CALL BEFORE YOU DIG
FOR BURIED UTILITY LOCATIONS
1-800-424-5555

PROJECT LOCATION: PIONEER FLEXSPACE, LLC
6407 PORTAL WAY,
FERNDALE, WASHINGTON

DRAWING #: 1808&SP26 (PH5).DWG
DRAWN BY: CJL
DESIGNED BY: HAF
CHECKED BY: HAF

SHEET CONTENTS: COVER SHEET

HAYDEN A. FREELAND III
STATE OF WASHINGTON
28519
REGISTERED
PROFESSIONAL ENGINEER

JOB #: 18084
DATE: 8-30-2021
SCALE: HORIZ: N/A VERT: N/A
SHEET: C1

00716.001 08/31/2021 RH

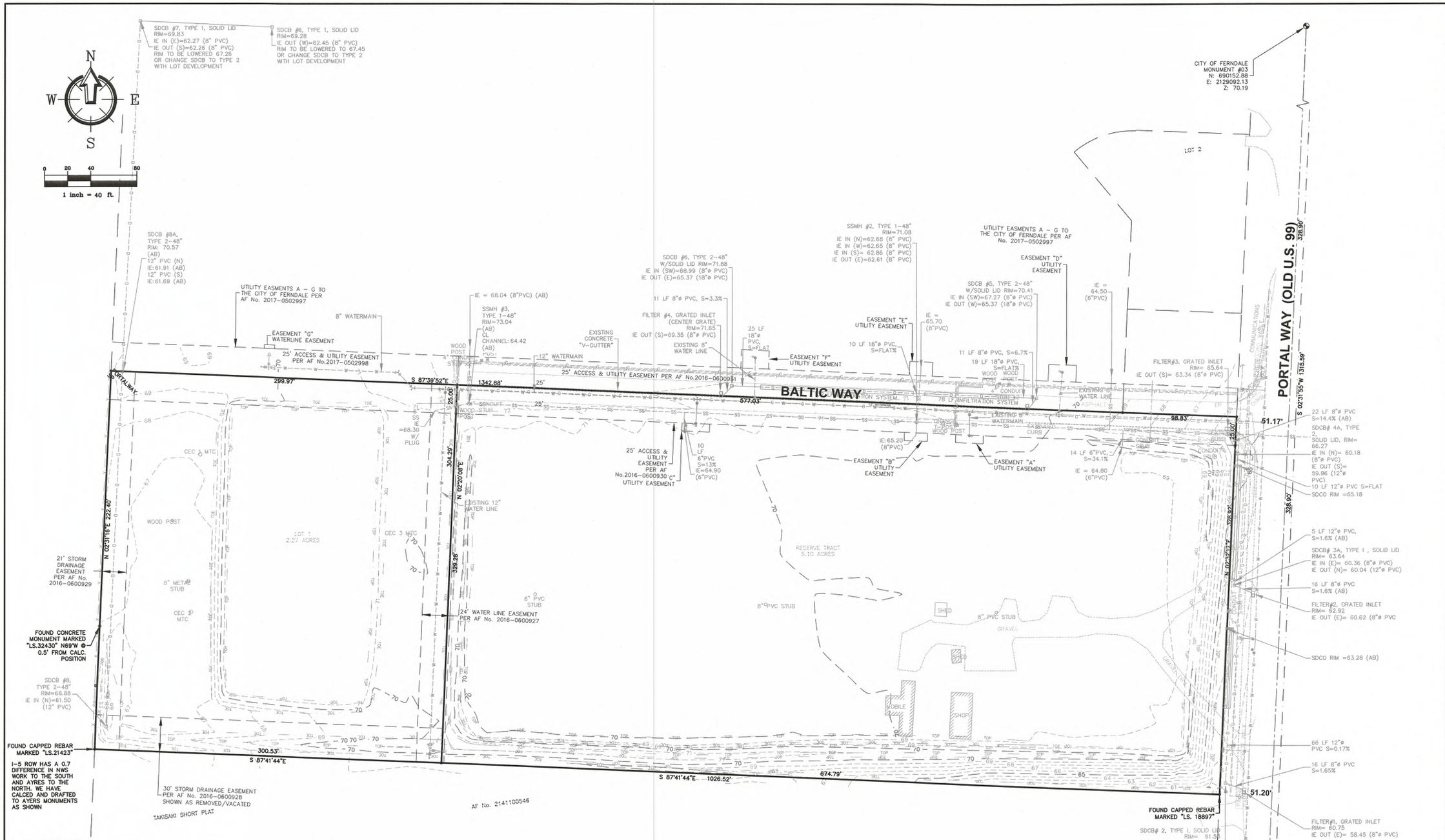

SURVEYOR'S NOTES:

1. "○" DENOTES 5/8 INCH REBAR WITH 1 INCH PLASTIC CAP MARKED "NWS & GPS 49276 & 50982" SET PER THE GENERAL AND SPECIFIC BINDING SITE PLAN No.1 FOR ALPINE INVESTMENTS, LLC.

2. "⊗" DENOTES CAPPED REBAR MARKED "LS. 18074" FOUND BY THIS SURVEY.

3. "✳" DENOTES CALCULATED POINT ONLY.

4. THIS SURVEY WAS PERFORMED BY STANDARD FIELD TRAVERSE USING A LEICA TS12 TOTAL STATION WITH A CARLSON SURVEYOR PLUS COLLECTOR/FIELD COMPUTER IN JANUARY AND FEBRUARY OF 2018.

5. THIS SURVEY TIED INTO CONTROL POINTS FROM OUR PREVIOUS WORK WITHIN THE AREA AND LOT CORNERS AS SHOWN AND RELIED UPON THE CITY OF FERNDALE SURVEY MONUMENT NETWORK FOR BASIS OF BEARINGS.

6. THIS SURVEY WAS COMPLETED WITHOUT THE BENEFIT OF A CURRENT TITLE REPORT AND DOES NOT PURPORT TO SHOW ANY OR ALL EASEMENTS THAT A CURRENT TITLE REPORT MIGHT REVEAL.

7. VERTICAL DATUM IS PER THE CITY OF FERNDALE MONUMENT NETWORK (NGVD29).

8. CONTOUR INTERVALS ARE 1 FOOT. CONTOURS ARE COMPUTER GENERATED FROM GROUND FIELD TOPOGRAPHY GATHERED FOR THIS SURVEY.

9. NORTHWEST SURVEYING & GPS INC. ASSUMES NO LIABILITY FOR ANY SUBSURFACE CONDITIONS OR UTILITIES NOT SHOWN HEREON. UNDERGROUND UTILITIES ARE KNOWN TO EXIST WITHIN THE AREA OF CONSTRUCTION. THE LOCATION OF EXISTING UTILITIES SHOWN ARE BASED UPON FIELD SURVEY AND VISUAL IDENTIFICATION. ALL EXISTING UTILITIES MAY NOT BE INDICATED WITHIN THE CONSTRUCTION DOCUMENTS. IT IS THE RESPONSIBILITY OF THE CONTRACTOR TO FIELD VERIFY ANY AND ALL UNDERGROUND UTILITY LOCATIONS PRIOR TO CONSTRUCTION AND TO ALERT THE ENGINEER AND OWNER PROMPTLY IN CASE OF CONFLICT.

ENGINEER'S CERTIFICATION:
"I HEREBY CERTIFY THAT THE IMPROVEMENTS OF PIONEER FLEXSPACE (PHASE 5) HAVE BEEN INSPECTED BY FREELAND & ASSOCIATES, INC. AND CONSTRUCTED IN GENERAL CONFORMANCE WITH THE PLANS APPROVED BY PUBLIC WORKS DIRECTOR FOR SAID DEVELOPMENT AND THE GENERAL SPECIFICATIONS ADOPTED BY THE CITY OF FERNDALE DEPARTMENT OF PUBLIC WORKS."

BY: HAF DATE: 8-30-21

APPROVED
AUG 31 2021
BY: [signature] FOR KEVIN
CITY OF FERNDALE
PUBLIC WORKS DEPARTMENT

CITY OF FERNDALE
MONUMENT #06
N: 690152.88
E: 2129092.13
Z: 48.96'

AS-BUILT DRAWING

AS-BUILT NOTE:
ONLY INFORMATION NOTED AS AS-BUILT "(AB)" HAS BEEN PROVIDED BY PROJECT SURVEYOR. DATE OF POINT FILES 10/1/2019, 10/18/2019, 10/23/2020, 07/12/2021. CONTRACTOR PROVIDED ADDITIONAL MEASURE DOWNS 10/21/2019.

220 West Champion Street, Suite 200 t: 360.650.1408
Bellingham, WA 98225 f: 360.650.1401
FREELAND & ASSOCIATES

REV:	DATE:	DESCRIPTION:	BY:

CLIENT: PIONEER POST FRAME
6208 PORTAL WAY
FERNDALE, WASHINGTON

CALL BEFORE YOU DIG
FOR BURIED UTILITY LOCATIONS
1-800-424-5555

PROJECT LOCATION: PIONEER FLEXSPACE, LLC
6407 PORTAL WAY
FERNDALE, WASHINGTON

DRAWING #: 18084SP26 (PHS).DWG
DRAWN BY: CJL
DESIGNED BY: HAF
CHECKED BY: HAF

SHEET CONTENTS: EXISTING CONDITIONS

HARRILL A. FREELAND III
STATE OF WASHINGTON
28513
REGISTERED PROFESSIONAL ENGINEER

JOB #:	DATE:
18084	8-30-2021
SCALE: HORIZ: 1"=40' VERT: N/A	SHEET: C2

00716.002 08/31/2021 RH

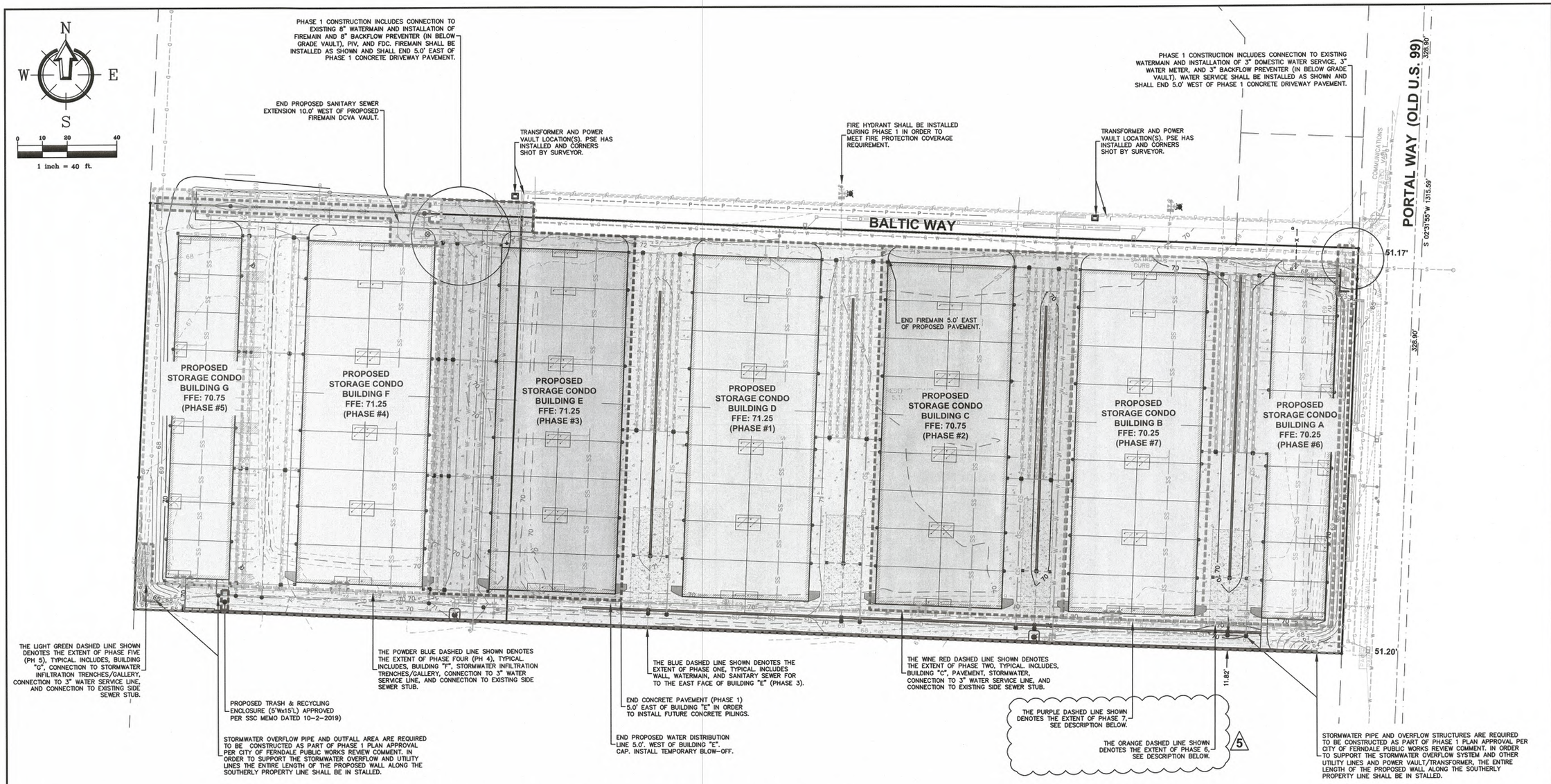

PHASE 1:
- RELOCATED EXISTING WATERMAIN TO WEST OF BUILDING "E" AND EXTEND PAST WALL 10.0' AND INSTALL BLOW-OFF ASSEMBLY.
- INSTALL 8" WATERMAIN SHOWN BETWEEN BUILDINGS "B" AND "C" IN ORDER TO AVOID CONFLICTS BY INSTALLING ALL THE INFRASTRUCTURE IN THAT AREA AT SAME TIME.
- INSTALL 8" FIREMAIN BACKFLOW PREVENTER IN VAULT AND PIV. INSTALL 8" FIREMAIN AND FDC. EXTEND 8" FIREMAIN TO BUILDINGS "A-G", INSTALL 8"x4" TEE AND GATE VALVE. CONNECT 4" FIREMAIN TO BUILDING "D". INSTALL BLIND FLANGE AT END OF THE REMAINING BUILDING'S 4" GATE VALVE FOR FUTURE CONNECTION.
- INSTALL 3" DOMESTIC WATER METER AND BACKFLOW PREVENTER IN VAULT. EXTENT WATER SERVICE PIPE SOUTH THEN WEST, PAST PHASE 1 CONCRETE DRIVEWAY PAVEMENT.
- INSTALL ALL STORMWATER OVERFLOW PIPE AND STRUCTURES ALONG THE SOUTHERLY PROPERTY LINE.
- INSTALL SANITARY SEWER EXTENSION FROM "EXISTING SSMH #3" TO PROPOSED SSMH #2. AND EXTEND 8" PVC SEWER MAIN 10.0' WEST OF PROPOSED FIREMAIN DCVA VAULT. CAP END FOR FUTURE CONNECTION.
- INSTALL FULL DRIVEWAY ON ALL SIDES OF BUILDING. MAINTAIN 5.0' SETBACK TO ADJACENT FUTURE BUILDINGS.

PHASE 2:
- INSTALL FULL DRIVEWAY ON ALL SIDES OF BUILDING "C". MAINTAIN 5.0' SETBACK TO ADJACENT FUTURE BUILDING TO EAST.
- INSTALL STORMWATER INFILTRATION TRENCHES AND GALLERY. CONNECT TO OVERFLOW CONVEYANCE SYSTEM (CONSTRUCTED DURING PHASE 1).
- CONNECT TO 8" FIREMAIN LINE AND INSTALL SPRINKLER SYSTEM.
- CONNECT TO 3" DOMESTIC WATER SERVICE INSTALLED DURING PHASE 1.
- CONNECT TO EXISTING SIDE SEWER STUB.

PHASE 3:
- INSTALL FULL DRIVEWAY ON ALL SIDES OF BUILDING "E". MAINTAIN 5.0' SETBACK TO ADJACENT FUTURE BUILDING TO WEST (BUILDING "F").
- INSTALL STORMWATER INFILTRATION TRENCHES AND PERMEABLE PAVEMENT. CONNECT TO OVERFLOW CONVEYANCE SYSTEM (CONSTRUCTED DURING PHASE 1).
- CONNECT TO 8" FIREMAIN LINE AND INSTALL SPRINKLER SYSTEM.
- CONNECT TO 3" DOMESTIC WATER SERVICE INSTALLED DURING PHASE 1.
- CONNECT TO EXISTING SANITARY SEWER MAIN WITH PROPOSED SIDE SEWER STUB.

PHASE 4:
- INSTALL FULL DRIVEWAY ON ALL SIDES OF BUILDING "F". MAINTAIN 5.0' SETBACK TO ADJACENT FUTURE BUILDING TO WEST (BUILDING "G").
- INSTALL STORMWATER INFILTRATION TRENCHES. CONNECT TO OVERFLOW CONVEYANCE SYSTEM (CONSTRUCTED DURING PHASE 1).
- CONNECT TO 8" FIREMAIN LINE AND INSTALL SPRINKLER SYSTEM.
- CONNECT TO 3" DOMESTIC WATER SERVICE INSTALLED DURING PHASE 1.
- CONNECT TO EXISTING SANITARY SEWER MAIN WITH PROPOSED SIDE SEWER STUB.
- COMPLETE WATER MAIN INSTALL TO WEST PROPERTY LINE.

PHASE 5:
- INSTALL REMAINING DRIVEWAY AROUND BUILDING "G".
- CONNECT TO STORMWATER INFILTRATION TRENCHES.
- CONNECT TO 8" FIREMAIN LINE AND INSTALL SPRINKLER SYSTEM.
- CONNECT TO 3" DOMESTIC WATER SERVICE INSTALLED DURING PHASE 1.
- CONNECT TO EXISTING SANITARY SEWER MAIN WITH PROPOSED SIDE SEWER STUB.

5

PHASE 6:
- INSTALL FULL DRIVEWAY ON ALL SIDES OF BUILDING "A". MAINTAIN 5.0' SETBACK TO ADJACENT FUTURE BUILDING TO WEST (BUILDING "B").
- INSTALL STORMWATER INFILTRATION TRENCHES. CONNECT TO OVERFLOW CONVEYANCE SYSTEM (CONSTRUCTED DURING PHASE 1).
- CONNECT TO 8" FIREMAIN LINE AND INSTALL SPRINKLER SYSTEM.
- CONNECT TO 3" DOMESTIC WATER SERVICE INSTALLED DURING PHASE 1.
- CONNECT TO EXISTING SANITARY SEWER MAIN WITH PROPOSED SIDE SEWER STUB.

PHASE 7:
- INSTALL REMAINING DRIVEWAY AROUND BUILDING "B".
- CONNECT TO STORMWATER INFILTRATION TRENCHES.
- CONNECT TO 8" FIREMAIN LINE AND INSTALL SPRINKLER SYSTEM.
- CONNECT TO 3" DOMESTIC WATER SERVICE INSTALLED DURING PHASE 1.
- CONNECT TO EXISTING SANITARY SEWER MAIN WITH PROPOSED SIDE SEWER STUB.

FUTURE PHASES:
- EACH BUILDING SITE SHALL BE FULLY SERVICED WITH SEWER SERVICE, POTABLE WATER SERVICE, AND FIRE SERVICE PRIOR TO ISSUANCE OF FUTURE BUILDING PERMIT(S). FULL DRIVEWAY AND ASSOCIATED INFILTRATION STORMWATER FACILITIES SHALL BE INSTALLED AND ACCEPTED PRIOR TO BUILDING OCCUPANCY.

FINAL OCCUPANCY OF PROPOSED BUILDING WILL NOT BE GRANTED UNTIL ALL PUBLIC WORKS REQUIREMENTS ARE MET.

APPROVED
AUG 31 2021
BY CITY OF FERNDALE
PUBLIC WORKS DEPARTMENT
Kevin Renz

220 West Champion Street, Suite 200 t: 360.650.1408
Bellingham, WA 98225 f: 360.650.1401
FREELAND & ASSOCIATES

REV:	DATE:	DESCRIPTION:	BY:
1	06/13/2019	PHASE 2 – BUILDING "C" SUBMITTAL	HAF
2	12/02/2019	PHASE 3 – BUILDING "E" SUBMITTAL	HAF
3	3/15/2020	PHASE 4 – BUILDING "B" SUBMITTAL	HAF
4	10/14/2020	PHASE 5 – BUILDING "G" SUBMITTAL	HAF
5	10/14/2020	PHASE 6&7 – BUILDING "A" & "B" SUBMITTAL	HAF

CLIENT:
PIONEER POST FRAME
6208 PORTAL WAY
FERNDALE, WASHINGTON

CALL BEFORE YOU DIG
FOR BURIED UTILITY LOCATIONS
1-800-424-5555

PROJECT LOCATION:
PIONEER FLEXSPACE, LLC
6407 PORTAL WAY,
FERNDALE, WASHINGTON

DRAWING #: 18084SP26 (PH5).DWG
DRAWN BY: CJL
DESIGNED BY: HAF
CHECKED BY: HAF

SHEET CONTENTS:
PHASING PLAN

HARVILL A. FREELAND III
STATE OF WASHINGTON
28519
REGISTERED PROFESSIONAL ENGINEER

JOB #:	DATE:
18084	8-30-2021
SCALE: HORIZ: 1"=40' VERT: N/A	SHEET: C3

00716.003 08/31/2021 RH

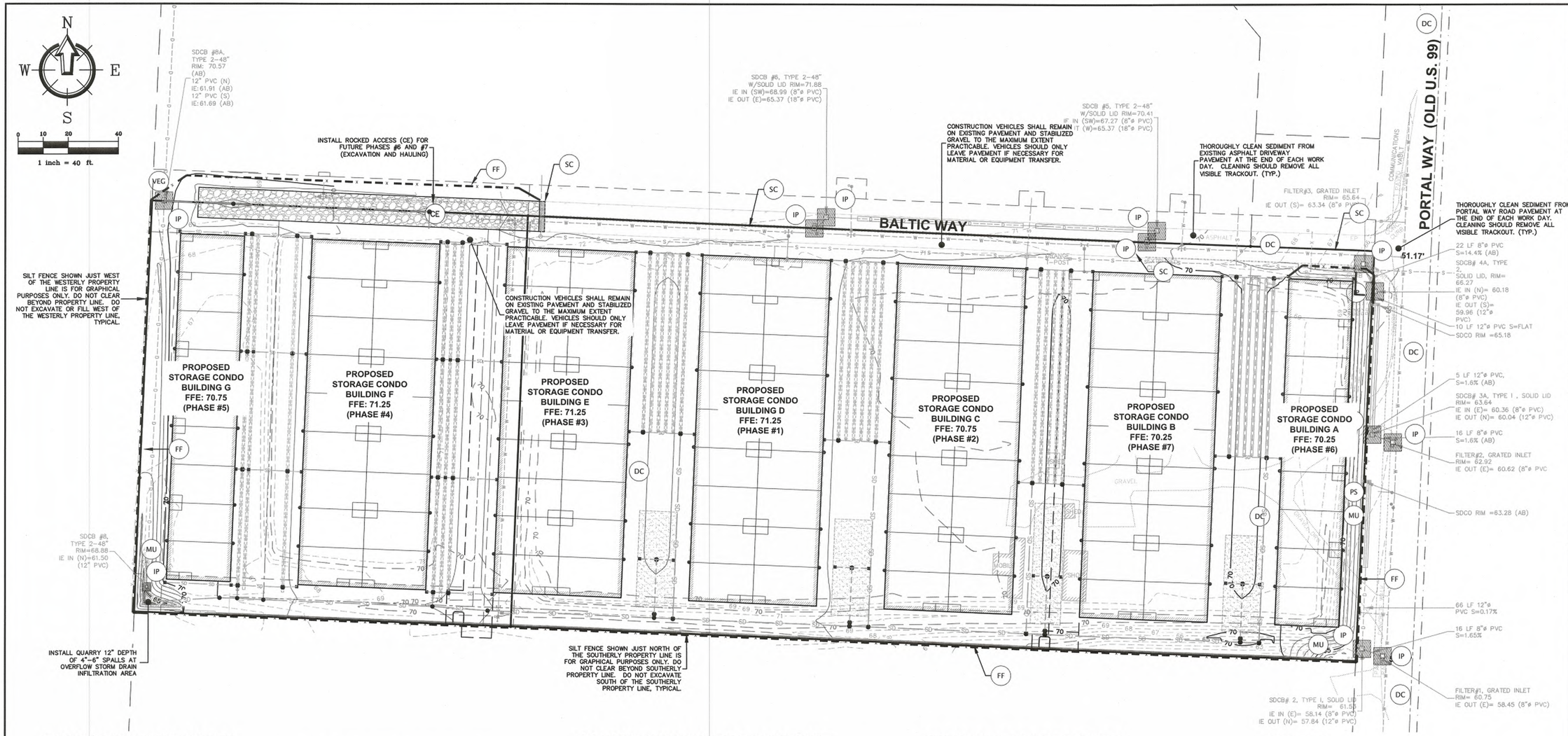

EROSION CONTROL NOTES:

1. APPROVAL OF THE EROSION/SEDIMENTATION CONTROL (ESC) PLAN DOES NOT CONSTITUTE AN APPROVAL OF PERMANENT ROAD OR DRAINAGE DESIGN (E.G., SIZE AND LOCATION OF ROADS, PIPES, RESTRICTORS, CHANNELS, RETENTION FACILITIES, UTILITIES, ETC.).
2. THE IMPLEMENTATION OF THE ESC PLANS AND THE CONSTRUCTION, MAINTENANCE, REPLACEMENT AND UPGRADING OF THESE ESC FACILITIES IS THE RESPONSIBILITY OF THE CONTRACTOR UNTIL ALL CONSTRUCTION IS APPROVED, AND LANDSCAPING IS ESTABLISHED.
3. THE ESC FACILITIES SHOWN ON THE PLANS MUST BE CONSTRUCTED IN CONJUNCTION WITH ALL CLEARING AND GRADING ACTIVITIES, AND IN SUCH A MANNER AS TO ENSURE THAT SEDIMENT LADEN WATER DOES NOT ENTER THE DRAINAGE SYSTEM OR VIOLATE APPLICABLE WATER QUALITY STANDARDS.
4. THE ESC FACILITIES SHOWN ON THE PLANS ARE THE MINIMUM REQUIREMENTS FOR ANTICIPATED SITE CONDITIONS. DURING THE CONSTRUCTION PERIOD, THESE ESC FACILITIES SHALL BE UPGRADED (E.G., ADDITIONAL SUMPS, RELOCATION OF DITCHES AND SILT FENCES, ETC.) AS NEEDED FOR UNEXPECTED STORM EVENTS, AND TO ENSURE THAT SEDIMENT AND SEDIMENT-LADEN WATER DO NOT LEAVE THE SITE.
5. THE CONTRACTOR OR THE CERTIFIED EROSION AND SEDIMENTATION CONTROL LEAD (CESCL) SHALL INSPECT BMPs DAILY OR AS APPROPRIATE. IF NEEDED, THE CONTRACTOR SHALL MAINTAIN AND REPAIR BMPs IMMEDIATELY TO ENSURE THEIR CONTINUED PERFORMANCE.
6. THE ESC FACILITIES ON INACTIVE SITES SHALL BE INSPECTED AND MAINTAINED A MINIMUM OF ONCE A MONTH OR WITHIN THE 24 HOURS FOLLOWING A MAJOR STORM EVENT.
7. AT NO TIME SHALL MORE THAN 6 INCHES OF SEDIMENT BE ALLOWED TO ACCUMULATE WITHIN SUMPS. TRASH PUMPS SHALL PUMP TO GRASSY AREAS ON SITE.
8. CONSTRUCTION ENTRANCE/EXIT IS REQUIRED. REPLACE OR RESTORE AS NECESSARY AND MAINTAINED FOR THE DURATION OF THE PROJECT. ADDITIONAL MEASURES SUCH AS WASH PADS MAY BE REQUIRED TO INSURE THAT ALL PAVED AREAS ARE KEPT CLEAN FOR THE DURATION OF THE PROJECT.
9. COVER ALL DIRT/TOPSOIL PILES WITH PLASTIC COVERING (BMP C123) DURING CONSTRUCTION WHEN NOT IN USE.
10. NETS AND BLANKETS (BMP C122) OR PLASTIC COVERING (BMP C123) MAY BE USED IN LIEU OF TEMPORARY MULCHING.
11. CONSTRUCTION SCHEDULE- PENDING APPROVAL OF PLANS FROM CITY OF FERNDALE, CONSTRUCTION START, SUMMER 2018.
12. ADDITIONAL BMPs, INCLUDING SEDIMENT TRAPS, MAY BE USED OR REQUIRED AS CONDITIONS WARRANT. BMPs SHALL BE INSTALLED PER RECOMMENDATIONS IN THE DOE STORMWATER MANAGEMENT MANUAL FOR WESTERN WASHINGTON, 2014 EDITION.
13. AN NPDES CONSTRUCTION STORMWATER GENERAL PERMIT FROM WASHINGTON STATE DEPARTMENT OF ECOLOGY (DOE) WILL BE REQUIRED FOR THIS PROJECT SINCE CONSTRUCTION ACTIVITIES WILL DISTURB MORE THAN ONE ACRE OF SOIL.
14. THE CONTRACTOR SHALL INSTALL, IMPLEMENT, AND MAINTAIN BMPs AS RECOMMENDED BY THE PROJECT ENGINEER OR CERTIFIED EROSION AND SEDIMENTATION CONTROL LEAD (CESCL) OR SHALL PROVIDE JUSTIFICATION WHY THE RECOMMENDATIONS MAY NOT APPLY.
15. NO SOIL SHALL REMAIN EXPOSED AND UNWORKED FOR MORE THAN 7 DAYS BETWEEN MAY 1 AND SEPTEMBER 30. BETWEEN OCTOBER 1 AND APRIL 30, NO SOIL SHALL REMAIN EXPOSED AND UNWORKED FOR MORE THAN 2 DAYS. ALL EXPOSED SOILS SHALL BE COVERED WITH MULCH, NETS/BLANKETS, COARSE GRAVEL, SEEDING AND PLANTINGS, OR PLASTIC. WITHIN 48 HOURS OF INITIAL CLEARING. EXCAVATION PILES SHALL BE COVERED WITH SECURED PLASTIC COVERING (BMP C123) WHEN NOT BEING WORKED.
16. ALL CONSTRUCTION TRAFFIC THAT WILL ROUTINELY LEAVE THE SITE (E.G. WORK TRUCKS, PERSONAL VEHICLES, ETC.) SHALL REMAIN ON PAVED OR STABILIZED SURFACES TO THE MAXIMUM EXTENT PRACTICABLE. OTHER VEHICLES THAT WILL REMAIN ON SITE, SUCH AS EXCAVATORS OR BACKHOES, MAY WORK WITHIN AREAS OF EXPOSED SOIL.
17. THE TRACKING OF MUD AND DEBRIS ONTO CITY ROAD IS PROHIBITED. PORTAL WAY AND EXISTING ASPHALT DRIVEWAY SHALL BE CLEANED AT END OF EACH WORK DAY OR AS DIRECTED BY THE CONTRACTOR OR CERTIFIED EROSION AND SEDIMENTATION CONTROL LEAD (CESCL).

CONSTRUCTION SCHEDULING NOTE:

1. THE CESCL & CONTRACTOR SHALL MONITOR WEATHER CONDITIONS AND FORECASTS DURING CONSTRUCTION. THE AMOUNT OF SOIL THAT MAY BE EXPOSED AT ANY TIME DEPENDS ON THE CONTRACTOR'S AVAILABLE CREW, MATERIALS, AND EQUIPMENT.
2. CONTRACTOR SHALL SCHEDULE WORK SO THAT ALL EXPOSED SOIL (INCLUDING TRENCHES AND STOCKPILES) CAN BE COMPLETELY COVERED AND STABILIZED PRIOR TO ANY SIGNIFICANT RAINFALL EVENT ON SITE.
3. WET WEATHER WORK SHOULD BE AVOIDED IF POSSIBLE. CONSTRUCT ROAD IMPROVEMENTS IN MULTIPLE PHASES OR SEGMENTS IF NECESSARY.
4. REMOVE TESC BMP(S) WITHIN 30 DAYS AFTER ALL DISTURBED AREAS HAVE BEEN STABILIZED.

CONSTRUCTION SEQUENCE:

1. HOLD THE PRE-CONSTRUCTION MEETING.
2. FLAG, PAINT, OR FENCE CLEARING LIMITS.
3. ALL DOWN GRADIENT PERIMETER SEDIMENT CONTROL BMPS (E.G. SEDIMENT POND, TEMPORARY OUTLET CONTROLS) MUST BE IN PLACE BEFORE ANY UP GRADIENT LAND-DISTURBING ACTIVITY BEGINS.
4. TOPSOIL AND SUBGRADE FROM THE SITE IS OF HIGH QUALITY AND SHALL NOT BE USED IN LANDSCAPE BEDS. SUBGRADE SOIL CAN BE USED AS NATIVE BACKFILL IF APPROVED BY GEOTECHNICAL ENGINEER AT TIME OF TRENCH BACKFILL. COVER STOCKPILE WITH MULCH OR PLASTIC COVERING (BMP C123) IF THE STOCKPILE IS TO REMAIN IN PLACE FOR MORE THAN TWO DAYS.
5. ROUGH GRADE THE SITE. COVER ALL AREAS THAT WILL BE UNWORKED FOR MORE THAN SEVEN DAYS DURING THE DRY SEASON (MAY 1 TO SEPTEMBER 30) OR TWO DAYS DURING THE WET SEASON (OCTOBER 1 TO APRIL 30) WITH STRAW, WOOD FIBER, COMPOST, PLASTIC COVERING, OR EQUIVALENT.
6. RELOCATE EROSION CONTROL MEASURES, OR INSTALL NEW MEASURES SO THAT AS SITE CONDITIONS CHANGE, THE EROSION AND SEDIMENT CONTROL IS ALWAYS IN ACCORDANCE WITH THE CITY OF BELLINGHAM AND DOE EROSION AND SEDIMENT CONTROL STANDARDS.
7. SEED, STABILIZE, OR COVER ANY AREAS TO REMAIN UNWORKED FOR MORE THAN 30 DAYS.
8. PERFORM ALL OTHER SITE IMPROVEMENTS IN A MANNER THAT MINIMIZES ADVERSE IMPACTS TO THE LOCATION AND FUNCTION OF THE STORMWATER BMP'S.
9. INSTALL ANY REQUIRED EROSION CONTROL BLANKETS, DITCH CHECKS, AND OTHER SEMI-PERMANENT AND PERMANENT EROSION CONTROL MEASURES.
10. REMOVE THE TEMPORARY EROSION AND SEDIMENT CONTROLS WITHIN 30 DAYS AFTER ALL DISTURBED AREAS HAVE BEEN STABILIZED.

LEGEND:

VEG	WSDOE BMP C101 PRESERVING NATURAL (OR CROP) VEGETATION	
CE	WSDOE BMP C105 STABILIZED CONSTRUCTION EXIT	B/C5
PS	WSDOE BMP C120 TEMPORARY AND PERMANENT SEEDING	
MU	WSDOE BMP C121 MULCHING	
DC	WSDOE BMP C140 DUST CONTROL	
IP	WSDOE BMP C220 STORM DRAIN INLET PROTECTION	A/C5
SC	WSDOE BMP C152 SAWCUTTING & SURFACE POLLUTION PREVENTION	D/C6
FF	WSDOE BMP C233 SILT FENCE	C/C7

APPROVED
AUG 31 2021
BY: CITY OF FERNDALE
PUBLIC WORKS DEPARTMENT

ENGINEER'S CERTIFICATION:
"I HEREBY CERTIFY THAT THE IMPROVEMENTS OF PIONEER FLEXSPACE (PHASE 5) HAVE BEEN INSPECTED BY FREELAND & ASSOCIATES, INC. AND CONSTRUCTED IN GENERAL CONFORMANCE WITH THE PLANS APPROVED BY PUBLIC WORKS DIRECTOR FOR SAID DEVELOPMENT AND THE GENERAL SPECIFICATIONS ADOPTED BY THE CITY OF FERNDALE DEPARTMENT OF PUBLIC WORKS."

BY: [signature] DATE: 8-30-21

AS-BUILT DRAWING

AS-BUILT NOTE:
ONLY INFORMATION NOTED AS AS-BUILT "(AB)" HAS BEEN PROVIDED BY PROJECT SURVEYOR. DATE OF POINT FILES 10/1/2019, 10/18/2019, 10/23/2020, 07/12/2021. CONTRACTOR PROVIDED ADDITIONAL MEASURE DOWNS 10/21/2019.

220 West Champion Street, Suite 200 t: 360.650.1408
Bellingham, WA 98225 f: 360.650.1401
FREELAND & ASSOCIATES

REV:	DATE:	DESCRIPTION:	BY:

CLIENT: PIONEER POST FRAME, 6208 PORTAL WAY, FERNDALE, WASHINGTON

CALL BEFORE YOU DIG FOR BURIED UTILITY LOCATIONS 1-800-424-5555

PROJECT LOCATION: PIONEER FLEXSPACE, LLC, 6407 PORTAL WAY, FERNDALE, WASHINGTON

DRAWING #: 18084SP26 (PH5).DWG | DRAWN BY: CJL | DESIGNED BY: HAF | CHECKED BY: HAF

SHEET CONTENTS: TEMPORARY EROSION AND SEDIMENTATION CONTROL PLAN

HAROLD A. FREELAND III, STATE OF WASHINGTON, 28519, REGISTERED PROFESSIONAL ENGINEER

JOB #: 18084	DATE: 8-30-2021
SCALE: HORIZ: 1"=40' VERT: N/A	SHEET: C4

00716.004 08/31/2021 RH

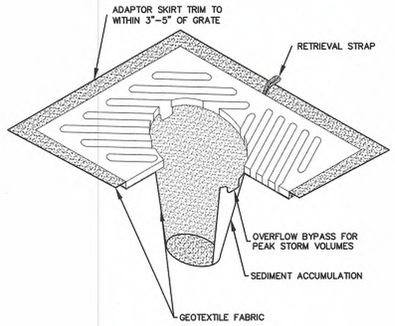

NOTES:

1. INSERT SHALL BE INSTALLED PRIOR TO CLEARING AND GRADING ACTIVITY, OR UPON PLACEMENT OF A NEW CATCH BASIN.
2. SEDIMENT SHALL BE REMOVED FROM THE UNIT WHEN IT BECOMES HALF FULL .
3. SEDIMENT REMOVAL SHALL BE ACCOMPLISHED BY REMOVING THE INSERT, EMPTYING, AND RE-INSERTING IT INTO THE CATCH BASIN.

(A) INLET PROTECTION
nts

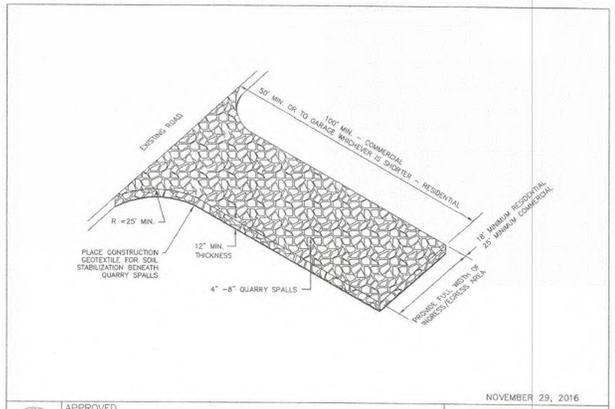

APPROVED

Public Works Director — 8/11/17 Date

NOVEMBER 29, 2016

TEMPORARY CONSTRUCTION ENTRANCE

STANDARD DETAIL ST-25

NOT TO SCALE

(B) TEMPORARY CONSTRUCTION ENTRANCE/EXIT
nts

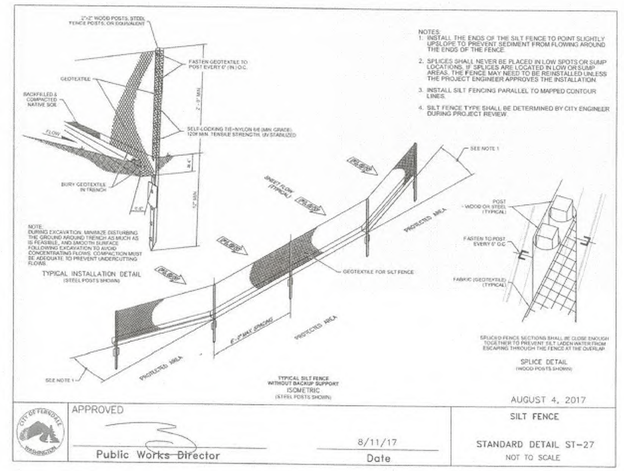

APPROVED

Public Works Director — 8/11/17 Date

AUGUST 4, 2017

SILT FENCE

STANDARD DETAIL ST-27

NOT TO SCALE

(C) SILT FENCE
nts

BMP C152: Sawcutting and Surfacing Pollution Prevention

Purpose

Sawcutting and surfacing operations generate slurry and process water that contains fine particles and high pH (concrete cutting), both of which can violate the water quality standards in the receiving water. Concrete spillage or concrete discharge to surface waters of the State is prohibited. Use this BMP to minimize and eliminate process water and slurry created through sawcutting or surfacing from entering waters of the State.

Conditions of Use

Utilize these management practices anytime sawcutting or surfacing operations take place. Sawcutting and surfacing operations include, but are not limited to, the following:

- Sawing
- Coring
- Grinding
- Roughening
- Hydro-demolition
- Bridge and road surfacing

Design and Installation Specifications

- Vacuum slurry and cuttings during cutting and surfacing operations.
- Slurry and cuttings shall not remain on permanent concrete or asphalt pavement overnight.
- Slurry and cuttings shall not drain to any natural or constructed drainage conveyance including stormwater systems. This may require temporarily blocking catch basins.
- Dispose of collected slurry and cuttings in a manner that does not violate ground water or surface water quality standards.
- Do not allow process water generated during hydro-demolition, surface roughening or similar operations to drain to any natural or constructed drainage conveyance including stormwater systems. Dispose process water in a manner that does not violate ground water or surface water quality standards.
- Handle and dispose cleaning waste material and demolition debris in a manner that does not cause contamination of water. Dispose of sweeping material from a pick-up sweeper at an appropriate disposal site.

Maintenance Standards

Continually monitor operations to determine whether slurry, cuttings, or process water could enter waters of the state. If inspections show that a violation of water quality standards could occur, stop operations and immediately implement preventive measures such as berms, barriers, secondary containment, and vacuum trucks.

Volume II – Construction Stormwater Pollution Prevention - August 2012
4-44

(D) SAWCUTTING
nts

STORMWATER POLLUTION PREVENTION PLAN

Element #1: Mark Clearing Limits

Clearing limits and nearby sensitive areas and their buffers will be clearly marked prior to beginning land disturbing activities, which includes clearing and grading. These areas will be clearly marked; both in the field and on site plans, to prevent damage and offsite impacts.

Washington State Department of Ecology BMP's considered for Element #1 include:
BMP C101: Preserving Natural Vegetation
BMP C103: High Visibility Plastic or Metal Fence

Element #2: Establish Construction Access

For Phases #1 - #5 construction vehicles shall use the existing road (Baltic Way) along the north property line to access the site. A second site access will be installed at the northwest property corner for Phases #6 & #7, see sheet C4, TESC Plan for location. Earthwork equipment will remain within the disturbed area to the maximum extent practicable. Construction traffic that will routinely leave the site (e.g. work trucks, personal vehicles) shall remain on paved surfaces to the maximum extent practicable. Paved roads & parking areas shall be cleaned at the end of each day. Sediment transported to roads from the site shall be swept and disposed of at a controlled sediment disposal area on site or removed off site and disposed at an approved fill site. If street washing is needed, it will only occur after sediment has been removed as described. The resulting wash wastewater would then be controlled by pumping it back on site. All construction access points will be restored to pre-construction or proposed conditions.

Washington State Department of Ecology BMPs considered for Element #2 include:
BMP C105: Stabilized Construction Entrance
Housekeeping/Maintenance BMP: Daily Street Sweeping
Housekeeping/Maintenance BMP: BMP C140 Dust Control

Element #3: Control Flow Rates

Flow rates shall be controlled to the maximum extent practical. Contractor shall preserve vegetated areas on the site as allowable throughout the construction process. Temporary sediment traps or ponds may be designed, located, and installed if the project engineer or CESCL deems necessary.

Washington State Department of Ecology BMPs considered for Element #3 include:
BMP C241: Temporary Sediment Pond

Element #4: Install Sediment Controls

The duff layer, native topsoil, and natural and existing vegetation will be not be retained since there is currently none available due to previous clearing/grading. Element #1 of this plan, including implementing *Preserving Natural Vegetation,* will not be practiced or applicable for Phase 1 and Phase 2 construction. Silt fencing will be installed downhill from disturbed areas to trap and retain sediment on site. Other sediment controls, such as temporary sediment traps, sumps, gravel filter berms, straw wattles, etc. may be installed if warranted as conditions change on site during construction.

Washington State Department of Ecology BMPs considered for Element #4 include:
BMP C233: Silt Fence
BMP C208: Triangular Silt Dike
BMP C235: Wattles

Element #5: Stabilize Soils

If construction occurs in the dry season, (5/1 through 9/30) soils will not remain exposed and unworked for more than 7 days. If construction occurs in the wet season (10/1 through 4/30) soils will not remain exposed and unworked for more than 2 days. When active grading is in progress, the deadline for soil stabilization may be extended upon determining that the likelihood of erosion impacts is low based on the type and amount of soil exposed, site topography, potential for discharge to critical areas and lakes, and other factors. In addition, weather conditions will continually be monitored, including before holidays and weekends, for purposes of preparing the site for predicted weather conditions. BMPs that are effective in stabilizing soils and protecting them from exposure to rain and wind or other climatic conditions will be implemented throughout the project. Evaluation and monitoring of BMP effectiveness will occur on a daily basis. In addition, in the event of forecasted precipitation events, additional measures to stabilize soils will be taken.

BMPs that will be considered throughout construction include but are not limited to temporary and permanent seeding, sodding, mulching, plastic covering, erosion control fabrics and matting, the early application of gravel base on areas to be paved, and dust control.

Washington State Department of Ecology BMPs considered for Element #5 include:
BMP C120: Temporary and Permanent Seeding
BMP C121: Mulching
BMP C122: Nets and Blankets
BMP C123: Plastic Covering
BMP C125: Topsoiling
BMP C140: Dust Control

Element #6: Protect Slopes

Significant cut or fill slopes are not proposed as part of this project.

Element #7: Protect Drain Inlets

Storm drain inlets are proposed as part of this project. Operable storm drain inlets on the site and within 500 feet downstream of the construction area roads will be protected so that stormwater runoff does not enter the conveyance system without filtration or other treatment for sediment. *Storm Drain Inlet Protection* will be used to determine the most appropriate inlet protection design for the site and the downstream area.

Inlets will be inspected weekly at a minimum and daily during storm events. Inlet protection devices shall be cleaned or removed and replaced before six inches of sediment can accumulate. Construction access points and approaches will be monitored and swept to minimize the potential of sediment transport. If street washing occurs, the wash wastewater will be pumped back on site.

Washington State Department of Ecology BMPs considered for Element #7 include:
BMP C220: Storm Drain Inlet Protection

Element #8: Stabilize Channels and Outlets

A temporary drainage swale/channel is proposed as a part of this project phase 1. The on-site conveyance channel has been designed to be armored with 2"-4" Ø quarry spalls and is not anticipated to have flow since it is an emergency overflow for the infiltration system. It shall be constructed and stabilized to prevent erosion from the expected flow velocity of a 2-year, 24-hour frequency storm.

Outlets of all conveyance systems will be protected and stabilized to prevent erosion of outlets and swales. *Outlet Protection* will be considered for purposes of designing and implementing the most effective outlet protection approach.

Washington State Department of Ecology BMPs considered for Element #8 include:
BMP C202: Channel Lining
BMP C209: Outlet Protection

Element #9: Control Pollutants

Waste materials generated on site will be handled and disposed of in a manner that does not cause contamination of stormwater; including covering soil stockpiles. Provide cover, containment, and protection from vandalism for all chemicals, liquid products, petroleum products, and other materials that have the potential to pose a threat to human health or the environment. On-site fueling tanks must include secondary containment. Routine inspections of the waste material storage areas will be conducted to make sure that leaks or spills do not occur. Any leakage or spills will be cleaned up immediately.

Maintenance of heavy equipment involving oil changes, hydraulic system drain down, solvent and de-greasing cleaning and/or other activities that may result in discharge or spillage of pollutants to the ground or into stormwater runoff will be conducted with spill prevention measures in place, including conducting maintenance on a temporary pad that can be used to capture large spills and the use of drip pans. In the event that emergency repairs need to be performed and climatic conditions may result in a precipitation event prior to the repair being completed, the repair area, which includes the vehicle, will be covered with tarps or other plastic sheeting. Discharges, spills, or leaks will be cleaned immediately. The notification procedure outlined in the permanent site SWPPP is as follows:

All spills will be reported to the Department of Ecology, Spill Response Program:
(425) 649-7000.

BMPs considered for Element #9 include: Spill Cleanup and Response Practices

Element #10: Control De-Watering

No de-watering is proposed as part of this project. If necessary, clean, non-turbid de-watering water, such as well-point ground water, can be discharged to systems tributary to State surface waters, provided the de-watering flow does not cause erosion or flooding of receiving waters. These clean waters should not be routed through a stormwater sediment pond.

Highly turbid or contaminated dewatering water from construction equipment operation, concrete tremie pour, or work inside a cofferdam shall be handled separately from stormwater.

Other disposal options, depending on site constraints, may include:

- Infiltration
- Transport off site in vehicle, such as a vacuum flush truck, for legal disposal in a manner that does not pollute state waters,
- On-site treatment using chemical treatment or other suitable treatment technologies,
- Sanitary sewer discharge with local sewer district approval, or
- Use of a sedimentation bag with outfall to a ditch or swale for small volumes of localized dewatering

Element #11: Maintain BMPs

All temporary and permanent erosion and sediment control BMPs will be inspected by the CESCL, and shall be maintained, and repaired by the contractor to assure continued performance of their intended function. Maintenance and repair shall be conducted in accordance with the relevant BMP identified in Elements #1 through #10. Temporary erosion and sediment controls identified above will be inspected daily during the wet season. Needed repairs and maintenance will occur as soon as practicable or, in the event of a forecast of inclement weather, repairs and maintenance will occur immediately.

Temporary erosion and sediment control BMPs will be removed within 30 days after final site stabilization is achieved or after the temporary BMPs are no longer needed. Trapped sediment will be removed or stabilized on site. Disturbed soil resulting from removal of BMPs or vegetation shall be permanently stabilized.

Element #12: Manage the Project

Construction

Exposed areas during the clearing and grading process will be mulched as part of the clearing and grading activities. Clearing and grading activities will occur after the applicable permits have been obtained. Revegetation of exposed areas and maintenance of that vegetation will occur as part of the planting phase of the project to be installed after sub-grade road base material has been installed and prior to final gravel surfacing. This project will be constructed in phases as shown on sheet C3, Phasing Plan.

Seasonal Work Limitations

From May 1 through September 30, soil will not be exposed/unworked for 7 days. From October 1 through April 30, soil will not remain exposed and unworked for more than 2 days. In addition, weather conditions will continually be monitored including before holidays and weekends for purposes of preparing the site for predicted weather conditions. BMPs that are effective in stabilizing soils and protecting them from exposure to rain and wind or other climatic conditions will be implemented throughout the project. Inspection and evaluation of the effectiveness of the BMPs will occur on a daily basis. In addition, in the event of forecasted precipitation events, additional measures to stabilize soils will be taken.

Coordination with Utilities and Other Contractors

The stormwater management requirements for all aspects of the construction project, including utilities, were considered in preparing the Construction SWPPP.

Inspection and Monitoring

As previously mentioned, all BMPs will be inspected, maintained, and repaired as needed to assure continued performance of their intended function. In the event that inspection and/or monitoring reveals that the BMPs identified in this Construction SWPPP are inadequate, due to the actual discharge of or potential to discharge a significant amount of any pollutant, this SWPPP shall be modified, as appropriate, in a timely manner.

Maintenance of the Construction SWPPP

CESCL contact information shall be provided to the City of Ferndale at or before pre-construcion. The Construction SWPPP will be retained on-site and will be updated on a regular basis. Modifications to the Construction SWPPP will be made whenever there is a significant change in the design, construction, operation, or maintenance of any BMP.

Element #13: Protect Low Impact Development

This project includes several Low Impact Development BMPs including Downspout Infiltration Trenches, Infiltration Basins, and Permeable Pavement. These facilities must be protected from sedimentation during construction. Excavate the stormwater management systems to within one foot of final bottom elevation of the facility during construction. Excavate to final depth only after all disturbed areas in the up gradient project drainage area have been permanently stabilized. After construction of the infiltration facilities, prevent sediment from entering the facilities by first conveying runoff through an appropriate pretreatment system (e.g. pre-settling basin, temporary sediment pond, or sand filter). Infiltration facilities should not be used as temporary sediment traps during construction. Any accumulated sediment within the infiltration facilities shall be removed before putting the facilities into service. Relatively light tracked equipment is recommended for this operation to avoid compaction to the basin floor. The used of draglines and track hoes should be considered for constructing infiltration basins if possible. The infiltration area shall be flagged or marked to keep heavy equipment away.

APPROVED
AUG 31 2021
BY: CITY OF FERNDALE
PUBLIC WORKS DEPARTMENT

AS-BUILT DRAWING

AS-BUILT NOTE:
ONLY INFORMATION NOTED AS AS-BUILT "(AB)" HAS BEEN PROVIDED BY PROJECT SURVEYOR. DATE OF POINT FILES 10/1/2019, 10/18/2019, 10/23/2020, 07/12/2021. CONTRACTOR PROVIDED ADDITIONAL MEASURE DOWNS 10/21/2019.

220 West Champion Street, Suite 200 t: 360.650.1408
Bellingham, WA 98225 f: 360.650.1401
FREELAND & ASSOCIATES

REV:	DATE:	DESCRIPTION:	BY:

CLIENT: PIONEER POST FRAME
6208 PORTAL WAY
FERNDALE, WASHINGTON

CALL BEFORE YOU DIG
FOR BURIED UTILITY LOCATIONS
1-800-424-5555

PROJECT LOCATION: PIONEER FLEXSPACE, LLC
6407 PORTAL WAY,
FERNDALE, WASHINGTON

DRAWING #: 18084SP26 (PH5).DWG
DRAWN BY: CJL
DESIGNED BY: HAF
CHECKED BY: HAF

SHEET CONTENTS: TEMPORARY EROSION AND SEDIMENTATION CONTROL DETAILS AND SWPPP

HARVILLA FREELAND III
STATE OF WASHINGTON
38512
REGISTERED PROFESSIONAL ENGINEER

JOB #: 18084
DATE: 8-30-2021
SCALE: HORIZ: 1"=40' VERT: N/A
SHEET: C5

00716.005 08/31/2021 RH

00716.006 08/31/2021 RH

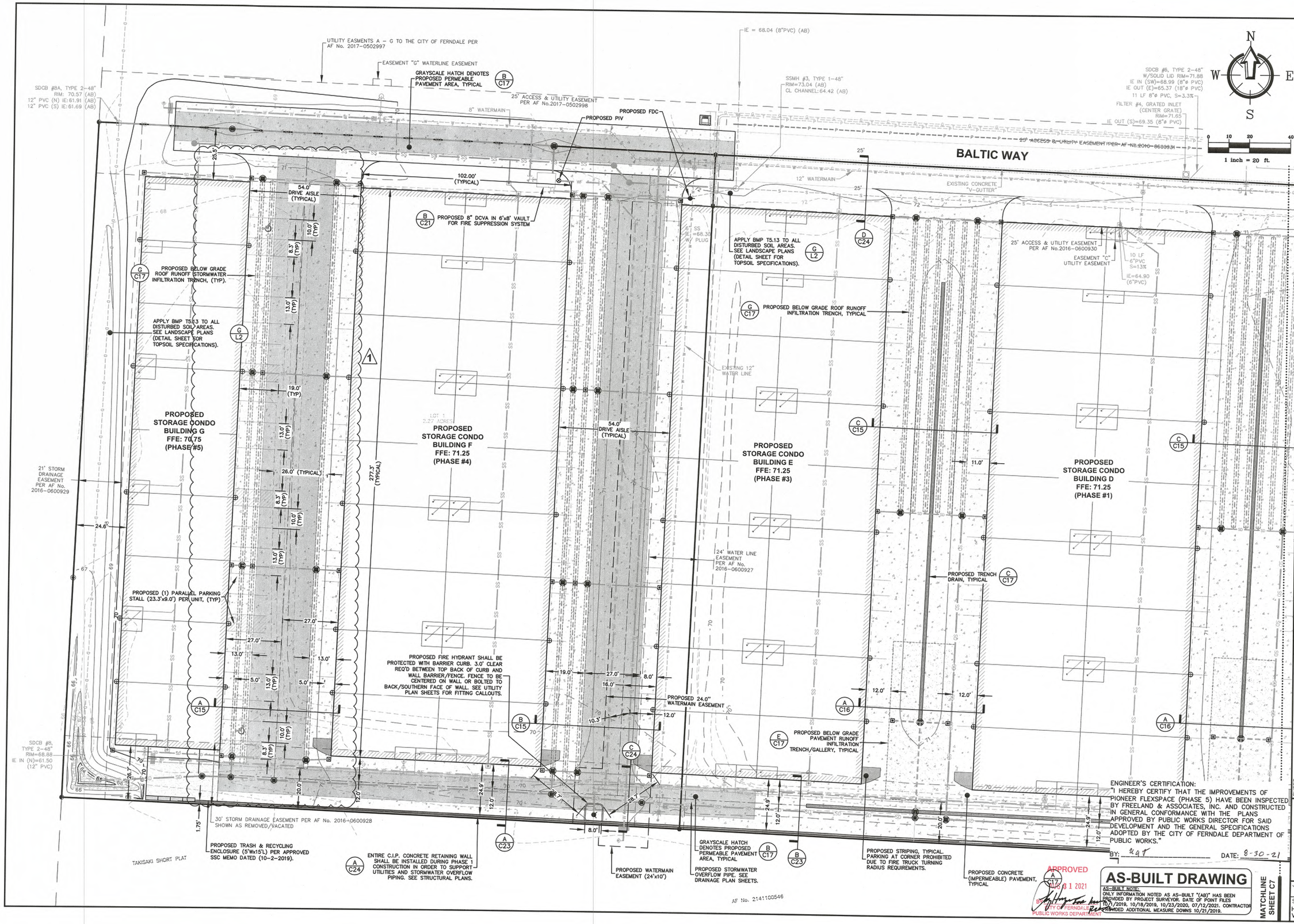

ENGINEER'S CERTIFICATION:
"I HEREBY CERTIFY THAT THE IMPROVEMENTS OF PIONEER FLEXSPACE (PHASE 5) HAVE BEEN INSPECTED BY FREELAND & ASSOCIATES, INC. AND CONSTRUCTED IN GENERAL CONFORMANCE WITH THE PLANS APPROVED BY PUBLIC WORKS DIRECTOR FOR SAID DEVELOPMENT AND THE GENERAL SPECIFICATIONS ADOPTED BY THE CITY OF FERNDALE DEPARTMENT OF PUBLIC WORKS."

BY: [illegible] DATE: 8-30-21

HAROLD A. FREELAND III — STATE OF WASHINGTON — 28519 — REGISTERED PROFESSIONAL ENGINEER

APPROVED
AUG 31 2021
BY [illegible]
CITY OF FERNDALE
PUBLIC WORKS DEPARTMENT

AS-BUILT DRAWING

AS-BUILT NOTE:
ONLY INFORMATION NOTED AS AS-BUILT "(AB)" HAS BEEN PROVIDED BY PROJECT SURVEYOR. DATE OF POINT FILES 10/1/2018, 10/18/2019, 10/23/2020, 07/12/2021. CONTRACTOR PROVIDED ADDITIONAL MEASURE DOWNS 10/21/2019.

MATCHLINE SHEET C7

220 West Champion Street, Suite 200 t: 360.650.1408
Bellingham, WA 98225 f: 360.650.1401
FREELAND & ASSOCIATES

REV:	DATE:	DESCRIPTION:	BY:
1	10-21-20	REVISED BUILDING G PARKING LAYOUT	

CLIENT: **PIONEER POST FRAME**
6208 PORTAL WAY
FERNDALE, WASHINGTON

CALL BEFORE YOU DIG
FOR BURIED UTILITY LOCATIONS
1-800-424-5555

PROJECT LOCATION: **PIONEER FLEXSPACE, LLC**
6407 PORTAL WAY,
FERNDALE, WASHINGTON

DRAWING #: 18084SP26 (PH5).DWG
DRAWN BY: CJL
DESIGNED BY: HAF
CHECKED BY: HAF

SHEET CONTENTS: **SITE PLAN (WEST)**

JOB #:	DATE:
18084	8-30-2021
SCALE: HORIZ: 1"=20' VERT: N/A	SHEET: C6

00716.007 08/31/2021 RH

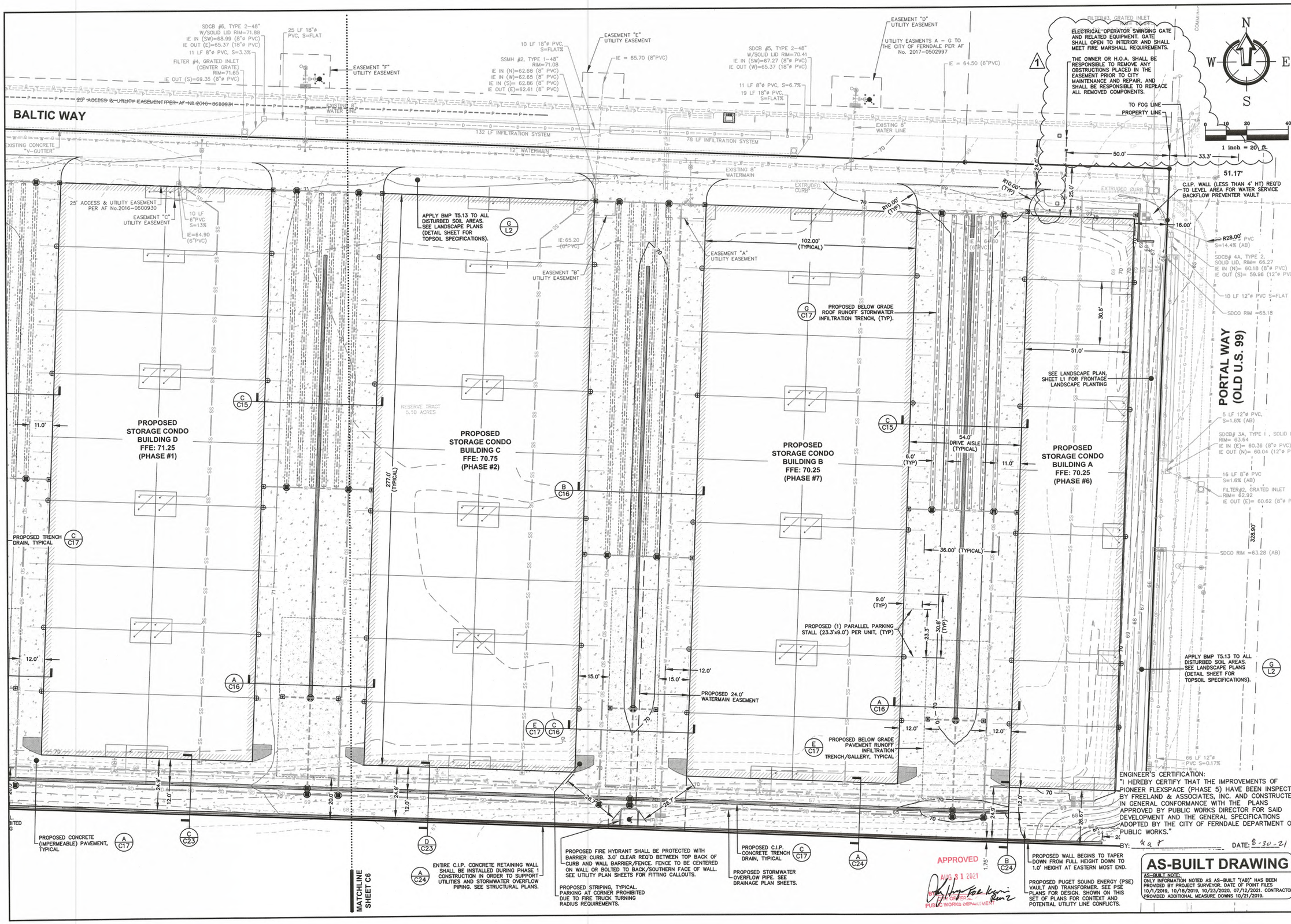

220 West Champion Street, Suite 200 t: 360.650.1408
Bellingham, WA 98225 f: 360.650.1401

FREELAND & ASSOCIATES

REV:	DATE:	DESCRIPTION:	BY:
1	11-25-2020	ENTRY GATE	NSP

CLIENT: **PIONEER POST FRAME** 6208 PORTAL WAY FERNDALE, WASHINGTON

CALL BEFORE YOU DIG FOR BURIED UTILITY LOCATIONS 1-800-424-5555

PROJECT LOCATION: **PIONEER FLEXSPACE, LLC** 6407 PORTAL WAY, FERNDALE, WASHINGTON

DRAWING #: 18084SP26 (PH5).DWG | DRAWN BY: CJL | DESIGNED BY: HAF | CHECKED BY: HAF

SHEET CONTENTS: **SITE PLAN (EAST)**

JOB #: 18084 | DATE: 8-30-2021

SCALE: HORIZ: 1"=20' VERT: N/A | SHEET: C7

00716.008 08/31/2021 RH

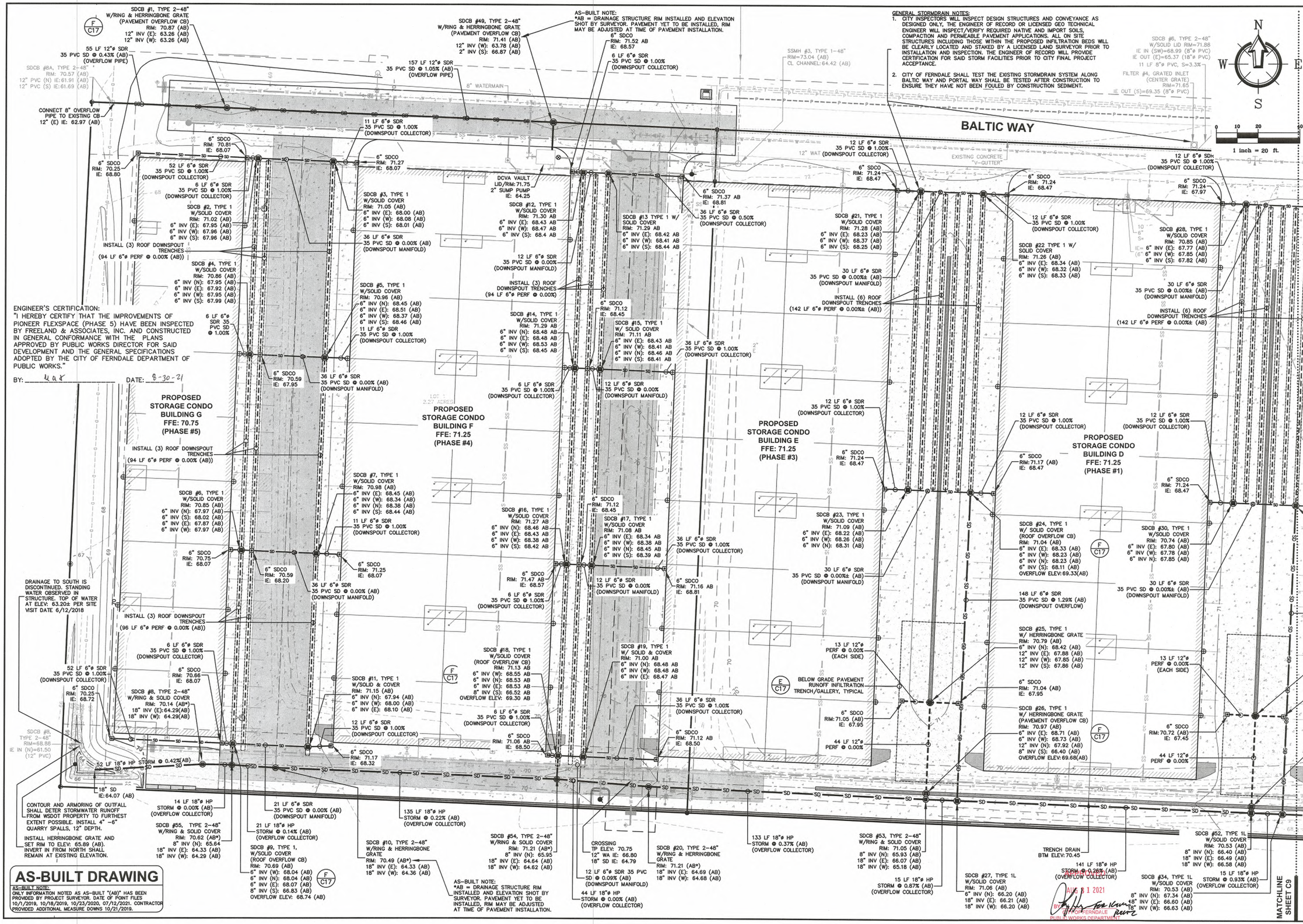

ENGINEER'S CERTIFICATION:
"I HEREBY CERTIFY THAT THE IMPROVEMENTS OF PIONEER FLEXSPACE (PHASE 5) HAVE BEEN INSPECTED BY FREELAND & ASSOCIATES, INC. AND CONSTRUCTED IN GENERAL CONFORMANCE WITH THE PLANS APPROVED BY PUBLIC WORKS DIRECTOR FOR SAID DEVELOPMENT AND THE GENERAL SPECIFICATIONS ADOPTED BY THE CITY OF FERNDALE DEPARTMENT OF PUBLIC WORKS."

BY: HAF DATE: 8-30-21

GENERAL STORMDRAIN NOTES:
1. CITY INSPECTORS WILL INSPECT DESIGN STRUCTURES AND CONVEYANCE AS DESIGNED ONLY, THE ENGINEER OF RECORD OR LICENSED GEO TECHNICAL ENGINEER WILL INSPECT/VERIFY REQUIRED NATIVE AND IMPORT SOILS, COMPACTION AND PERMEABLE PAVEMENT APPLICATIONS. ALL ON SITE STRUCTURES INCLUDING THOSE WITHIN THE PROPOSED INFILTRATION BEDS WILL BE CLEARLY LOCATED AND STAKED BY A LICENSED LAND SURVEYOR PRIOR TO INSTALLATION AND INSPECTION. THE ENGINEER OF RECORD WILL PROVIDE CERTIFICATION FOR SAID STORM FACILITIES PRIOR TO CITY FINAL PROJECT ACCEPTANCE.
2. CITY OF FERNDALE SHALL TEST THE EXISTING STORMDRAIN SYSTEM ALONG BALTIC WAY AND PORTAL WAY SHALL BE TESTED AFTER CONSTRUCTION TO ENSURE THEY HAVE NOT BEEN FOULED BY CONSTRUCTION SEDIMENT.

AS-BUILT DRAWING
AS-BUILT NOTE:
ONLY INFORMATION NOTED AS AS-BUILT "(AB)" HAS BEEN PROVIDED BY PROJECT SURVEYOR. DATE OF POINT FILES 10/1/2019, 10/18/2019, 10/23/2020, 07/12/2021. CONTRACTOR PROVIDED ADDITIONAL MEASURE DOWNS 10/21/2019.

AUG 31 2021
BY: CITY OF FERNDALE PUBLIC WORKS DEPARTMENT
AS-BUILT REVIEW

220 West Champion Street, Suite 200 t: 360.650.1408
Bellingham, WA 98225 f: 360.650.1401
FREELAND & ASSOCIATES

REV:	DATE:	DESCRIPTION:	BY:
1	5/20/2019	STORM AND WATERMAIN CROSSING REVISION	HAF

CLIENT: PIONEER POST FRAME
6208 PORTAL WAY
FERNDALE, WASHINGTON

CALL BEFORE YOU DIG
FOR BURIED UTILITY LOCATIONS
1-800-424-5555

PROJECT LOCATION: PIONEER FLEXSPACE, LLC
6407 PORTAL WAY
FERNDALE, WASHINGTON

DRAWING #: (PH5).DWG 18084SP26
DRAWN BY: CJL
DESIGNED BY: HAF
CHECKED BY: HAF

SHEET CONTENTS: DRAINAGE PLAN (WEST)

HAROLD A. FREELAND III — STATE OF WASHINGTON — 28519 — REGISTERED PROFESSIONAL ENGINEER

JOB #:	DATE:
18084	8-30-2021
SCALE: HORIZ: 1"=20' VERT: N/A	SHEET: C8

00716.009 08/31/2021 RH

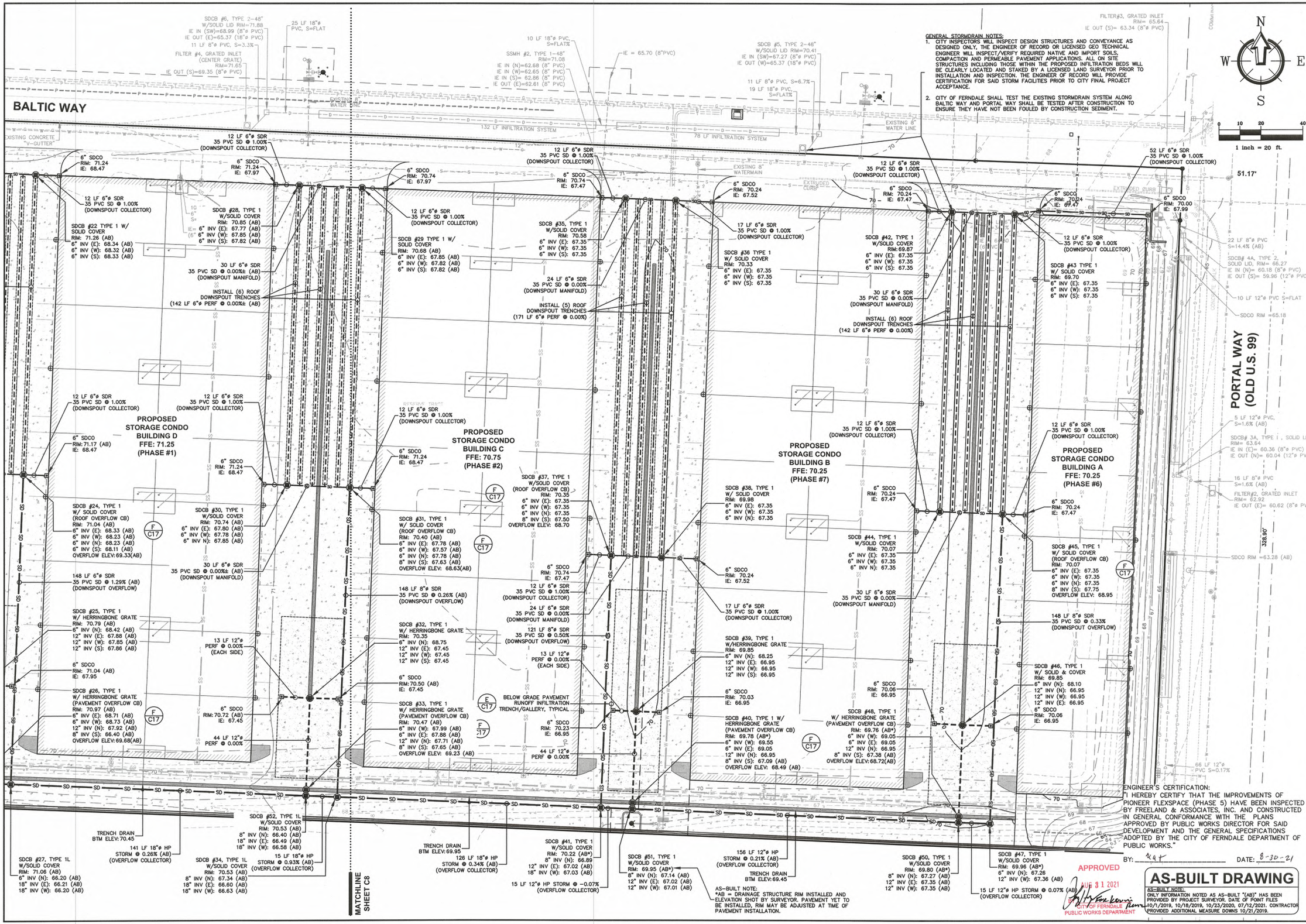

GENERAL STORMDRAIN NOTES:

1. CITY INSPECTORS WILL INSPECT DESIGN STRUCTURES AND CONVEYANCE AS DESIGNED ONLY, THE ENGINEER OF RECORD OR LICENSED GEO TECHNICAL ENGINEER WILL INSPECT/VERIFY REQUIRED NATIVE AND IMPORT SOILS, COMPACTION AND PERMEABLE PAVEMENT APPLICATIONS. ALL ON SITE STRUCTURES INCLUDING THOSE WITHIN THE PROPOSED INFILTRATION BEDS WILL BE CLEARLY LOCATED AND STAKED BY A LICENSED LAND SURVEYOR PRIOR TO INSTALLATION AND INSPECTION. THE ENGINEER OF RECORD WILL PROVIDE CERTIFICATION FOR SAID STORM FACILITIES PRIOR TO CITY FINAL PROJECT ACCEPTANCE.
2. CITY OF FERNDALE SHALL TEST THE EXISTING STORMDRAIN SYSTEM ALONG BALTIC WAY AND PORTAL WAY SHALL BE TESTED AFTER CONSTRUCTION TO ENSURE THEY HAVE NOT BEEN FOULED BY CONSTRUCTION SEDIMENT.

ENGINEER'S CERTIFICATION:
"I HEREBY CERTIFY THAT THE IMPROVEMENTS OF PIONEER FLEXSPACE (PHASE 5) HAVE BEEN INSPECTED BY FREELAND & ASSOCIATES, INC. AND CONSTRUCTED IN GENERAL CONFORMANCE WITH THE PLANS APPROVED BY PUBLIC WORKS DIRECTOR FOR SAID DEVELOPMENT AND THE GENERAL SPECIFICATIONS ADOPTED BY THE CITY OF FERNDALE DEPARTMENT OF PUBLIC WORKS."

BY: _____ DATE: 8-30-21

APPROVED
AUG 31 2021
CITY OF FERNDALE
PUBLIC WORKS DEPARTMENT

AS-BUILT DRAWING

AS-BUILT NOTE:
ONLY INFORMATION NOTED AS AS-BUILT "(AB)" HAS BEEN PROVIDED BY PROJECT SURVEYOR. DATE OF POINT FILES 10/1/2019, 10/18/2019, 10/23/2020, 07/12/2021. CONTRACTOR PROVIDED ADDITIONAL MEASURE DOWNS 10/21/2019.

220 West Champion Street, Suite 200 t: 360.650.1408
Bellingham, WA 98225 f: 360.650.1401
FREELAND & ASSOCIATES

BY:	DATE:	DESCRIPTION:	REV:

CLIENT: PIONEER POST FRAME, 6208 PORTAL WAY, FERNDALE, WASHINGTON

CALL BEFORE YOU DIG FOR BURIED UTILITY LOCATIONS 1-800-424-5555

PROJECT LOCATION: PIONEER FLEXSPACE, LLC, 6407 PORTAL WAY, FERNDALE, WASHINGTON

DRAWING #: 18084SP26 (PHS).DWG
DRAWN BY: CJL
DESIGNED BY: HAF
CHECKED BY: HAF

SHEET CONTENTS: DRAINAGE PLAN (EAST)

JAMES A. FREELAND III, STATE OF WASHINGTON, 26519, REGISTERED PROFESSIONAL ENGINEER

JOB #:	DATE:
18084	8-30-2021
SCALE: HORIZ: 1"=20' VERT: N/A	SHEET: C9

00716.010 08/31/2021 RH

WALL CONSTRUCTION NOTE:
THE CITY OF FERNDALE APPROVES OF THE NEW WATER MAIN CONFIGURATION PROPOSED WITHIN THE EASEMENT TO FACILITATE FUTURE DEVELOPMENT PLANS ON THE ADJACENT SOUTH PARCEL. THE WATER MAIN WILL BE INSTALLED APPROXIMATELY 2' DEEPER THAN THE ORIGINAL DESIGN AND THE HYDRANT CONFIGURATION WILL BE ALTERED TO BETTER SUIT THE ADJUSTED GRADES NEEDED TO DEVELOP THE SOUTH PARCEL. SPECIFIC CHANGES TO THE DEPTH OF FOOTING FOR THE PROJECT RETAINING WALL HAVE ALSO BEEN ADJUSTED DEEPER TO FACILITATE THE ADJACENT SOUTH PARCEL DEVELOPMENT PLAN PROJECTED FINISH GRADES. PUBLIC WORKS HAS NO OPPOSITION TO THE GRADE /ELEVATION CHANGES PROPOSED FOR THE RETAINING WALL HOWEVER, DUE TO CONTRACTUAL OBLIGATIONS BETWEEN THE TWO PARTIES INVOLVED WITH THE TWO SEPARATE PARCELS THE CITY RECOMMENDS A SEPARATE THIRD PARTY INSPECTION / SURVEY BE PERFORMED TO VERIFY SPECIFIC FOOTING GRADE REQUIREMENTS HAVE BE MET TO SATISFY SAID CONTRACTUAL OBLIGATIONS AS THIS IS NOT PART OF THE CITY'S NORMAL INSPECTION PROCESS. PUBLIC WORKS CANNOT APPROVE STRUCTURAL CHANGES TO THE WALL AS PROPOSED AND WILL THEREFORE RECOMMEND THE APPLICANT SUBMIT THE PROPOSED CHANGES TO THE BUILDING DEPARTMENT FOR REVIEW AND APPROVAL PRIOR TO CONSTRUCTION.

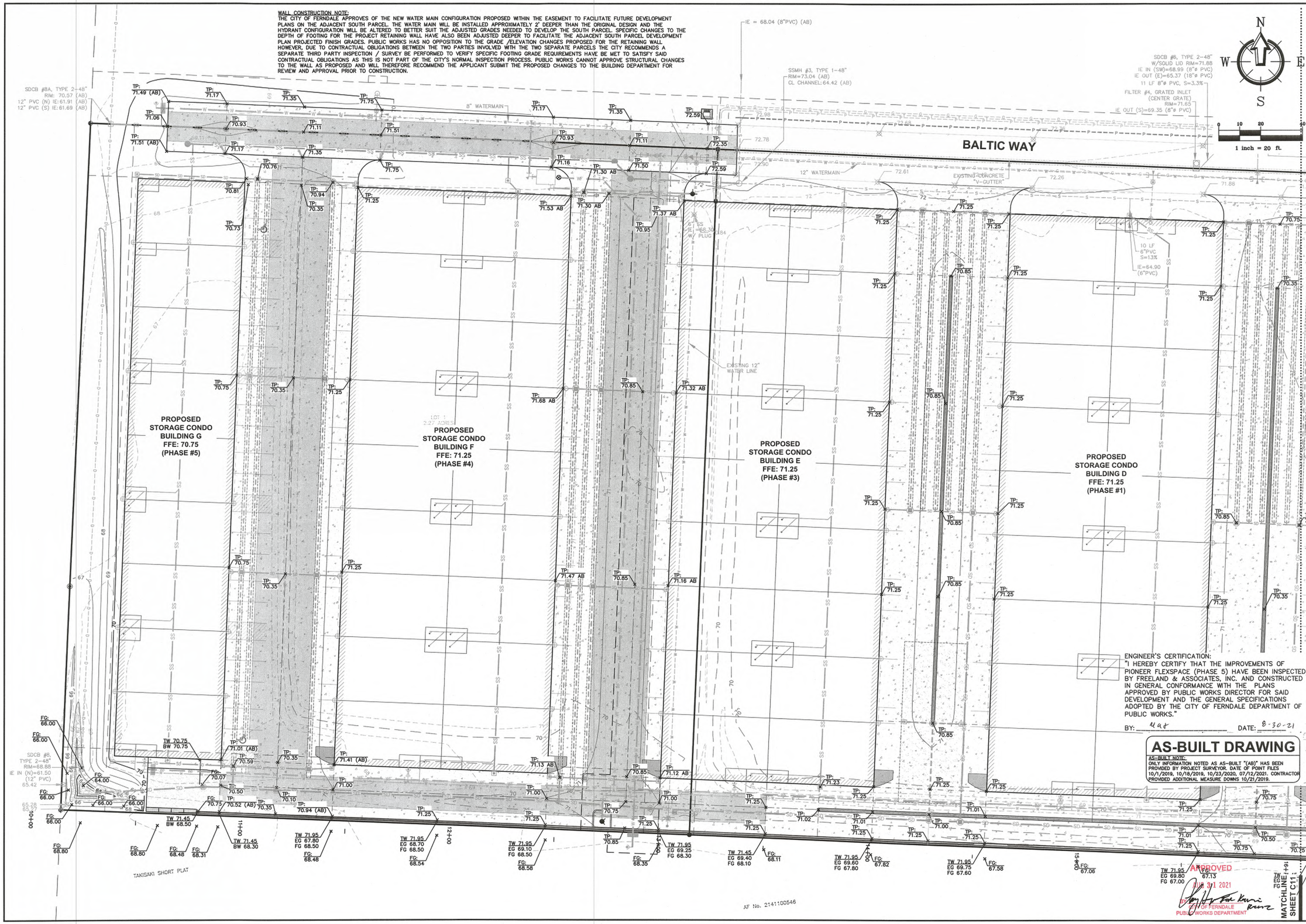

ENGINEER'S CERTIFICATION:
"I HEREBY CERTIFY THAT THE IMPROVEMENTS OF PIONEER FLEXSPACE (PHASE 5) HAVE BEEN INSPECTED BY FREELAND & ASSOCIATES, INC. AND CONSTRUCTED IN GENERAL CONFORMANCE WITH THE PLANS APPROVED BY PUBLIC WORKS DIRECTOR FOR SAID DEVELOPMENT AND THE GENERAL SPECIFICATIONS ADOPTED BY THE CITY OF FERNDALE DEPARTMENT OF PUBLIC WORKS."

BY: HAF DATE: 8-30-21

AS-BUILT DRAWING

AS-BUILT NOTE:
ONLY INFORMATION NOTED AS AS-BUILT "(AB)" HAS BEEN PROVIDED BY PROJECT SURVEYOR. DATE OF POINT FILES 10/1/2019, 10/18/2019, 10/23/2020, 07/12/2021. CONTRACTOR PROVIDED ADDITIONAL MEASURE DOWNS 10/21/2019.

APPROVED
AUG 31 2021
CITY OF FERNDALE
PUBLIC WORKS DEPARTMENT

220 West Champion Street, Suite 200 t: 360.650.1408
Bellingham, WA 98225 f: 360.650.1401
FREELAND & ASSOCIATES

REV:	DATE:	DESCRIPTION:	BY:
1	1/30/2019	CROSS SECTION REVISION PER OWNER REQUEST	HAF

CLIENT: PIONEER POST FRAME
6208 PORTAL WAY
FERNDALE, WASHINGTON

CALL BEFORE YOU DIG
FOR BURIED UTILITY LOCATIONS
1-800-424-5555

PROJECT LOCATION: PIONEER FLEXSPACE, LLC
6407 PORTAL WAY
FERNDALE, WASHINGTON

DRAWING #: 18084SP26 (PH5).DWG
DRAWN BY: CJL
DESIGNED BY: HAF
CHECKED BY: HAF

SHEET CONTENTS: GRADING PLAN (WEST)

STATE OF WASHINGTON — HAROLD A. FREELAND III — 28519 — REGISTERED PROFESSIONAL ENGINEER

JOB #:	DATE:
18084	8-30-2021
SCALE: HORIZ: 1"=20' VERT: N/A	SHEET: C10

00716.011 08/31/2021 RH

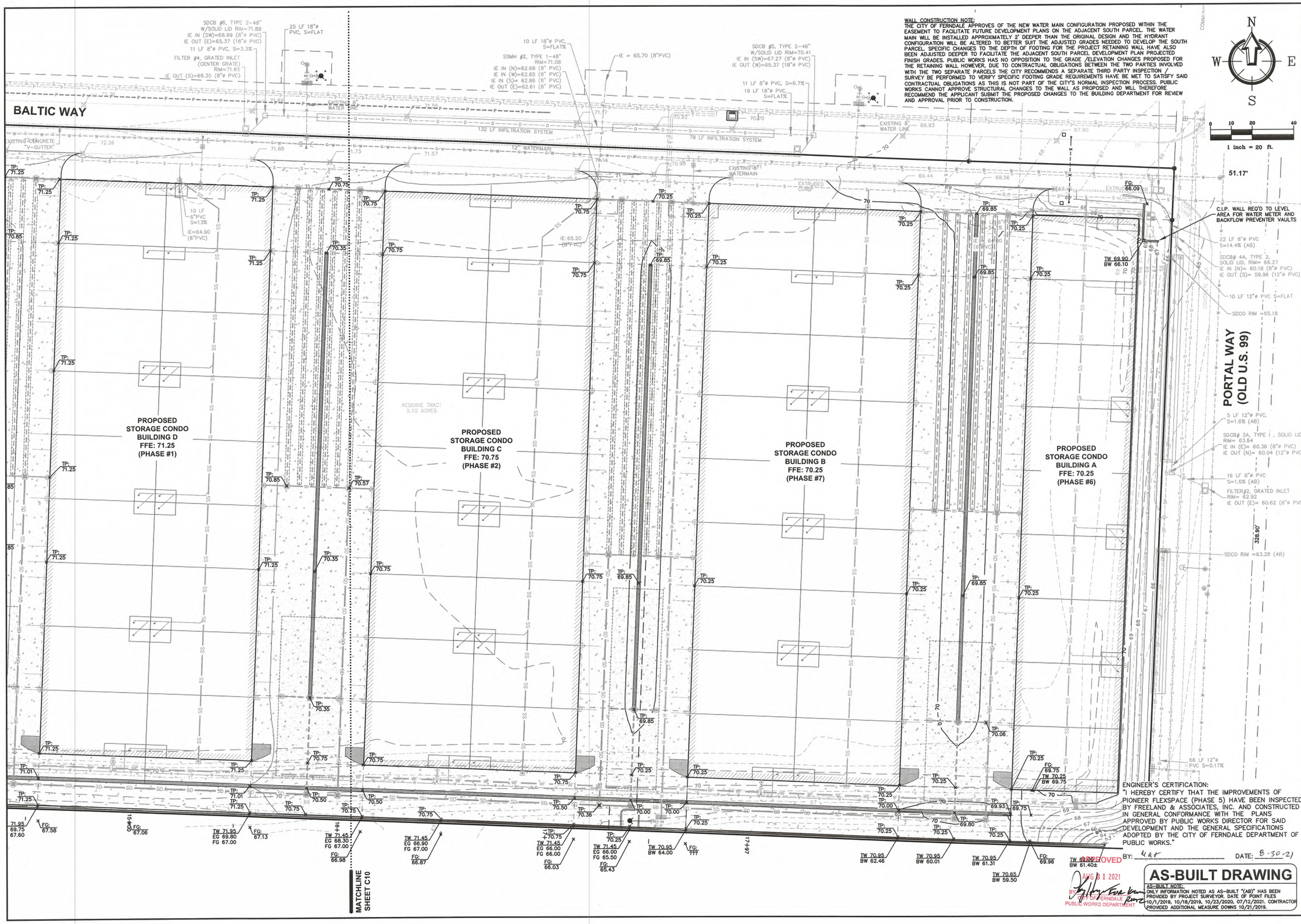

WALL CONSTRUCTION NOTE:
THE CITY OF FERNDALE APPROVES OF THE NEW WATER MAIN CONFIGURATION PROPOSED WITHIN THE EASEMENT TO FACILITATE FUTURE DEVELOPMENT PLANS ON THE ADJACENT SOUTH PARCEL. THE WATER MAIN WILL BE INSTALLED APPROXIMATELY 2' DEEPER THAN THE ORIGINAL DESIGN AND THE HYDRANT CONFIGURATION WILL BE ALTERED TO BETTER SUIT THE ADJUSTED GRADES NEEDED TO DEVELOP THE SOUTH PARCEL. SPECIFIC CHANGES TO THE DEPTH OF FOOTING FOR THE PROJECT RETAINING WALL HAVE ALSO BEEN ADJUSTED DEEPER TO FACILITATE THE ADJACENT SOUTH PARCEL DEVELOPMENT PLAN PROJECTED FINISH GRADES. PUBLIC WORKS HAS NO OPPOSITION TO THE GRADE /ELEVATION CHANGES PROPOSED FOR THE RETAINING WALL HOWEVER, DUE TO CONTRACTUAL OBLIGATIONS BETWEEN THE TWO PARTIES INVOLVED WITH THE TWO SEPARATE PARCELS THE CITY RECOMMENDS A SEPARATE THIRD PARTY INSPECTION / SURVEY BE PERFORMED TO VERIFY SPECIFIC FOOTING GRADE REQUIREMENTS HAVE BE MET TO SATISFY SAID CONTRACTUAL OBLIGATIONS AS THIS IS NOT PART OF THE CITY'S NORMAL INSPECTION PROCESS. PUBLIC WORKS CANNOT APPROVE STRUCTURAL CHANGES TO THE WALL AS PROPOSED AND WILL THEREFORE RECOMMEND THE APPLICANT SUBMIT THE PROPOSED CHANGES TO THE BUILDING DEPARTMENT FOR REVIEW AND APPROVAL PRIOR TO CONSTRUCTION.

ENGINEER'S CERTIFICATION:
"I HEREBY CERTIFY THAT THE IMPROVEMENTS OF PIONEER FLEXSPACE (PHASE 5) HAVE BEEN INSPECTED BY FREELAND & ASSOCIATES, INC. AND CONSTRUCTED IN GENERAL CONFORMANCE WITH THE PLANS APPROVED BY PUBLIC WORKS DIRECTOR FOR SAID DEVELOPMENT AND THE GENERAL SPECIFICATIONS ADOPTED BY THE CITY OF FERNDALE DEPARTMENT OF PUBLIC WORKS."

BY: HAF DATE: 8-30-21

APPROVED AUG 31 2021 BY CITY OF FERNDALE PUBLIC WORKS DEPARTMENT

AS-BUILT DRAWING

AS-BUILT NOTE:
ONLY INFORMATION NOTED AS AS-BUILT "(AB)" HAS BEEN PROVIDED BY PROJECT SURVEYOR. DATE OF POINT FILES 10/1/2019, 10/18/2019, 10/23/2020, 07/12/2021. CONTRACTOR PROVIDED ADDITIONAL MEASURE DOWNS 10/21/2019.

220 West Champion Street, Suite 200 t: 360.650.1408
Bellingham, WA 98225 f: 360.650.1401
FREELAND & ASSOCIATES

REV:	DATE:	DESCRIPTION:	BY:
1	1/30/2019	CROSS SECTION REVISION PER OWNER REQUEST	HAF

CLIENT: PIONEER POST FRAME, 6208 PORTAL WAY, FERNDALE, WASHINGTON

CALL BEFORE YOU DIG FOR BURIED UTILITY LOCATIONS 1-800-424-5555

PROJECT LOCATION: PIONEER FLEXSPACE, LLC, 6407 PORTAL WAY, FERNDALE, WASHINGTON

DRAWING #: 18084SP26 (PH5).DWG | DRAWN BY: CJL
DESIGNED BY: HAF | CHECKED BY: HAF

SHEET CONTENTS: GRADING PLAN (EAST)

HAROLD A. FREELAND III, STATE OF WASHINGTON, 28519, REGISTERED PROFESSIONAL ENGINEER

JOB #:	DATE:
18084	8-30-2021
SCALE: HORIZ: 1"=20' VERT: N/A	SHEET: C11

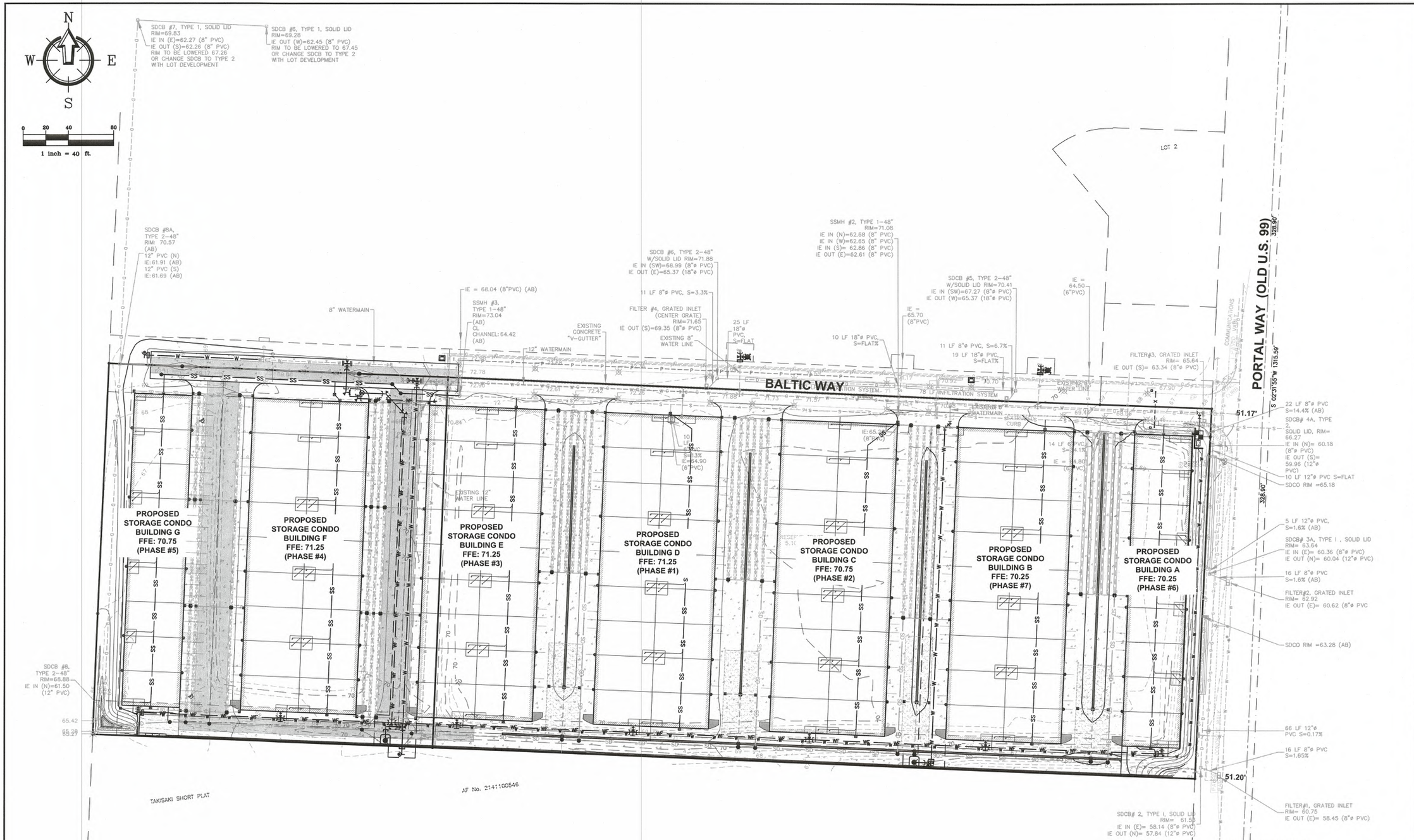

ENGINEER'S CERTIFICATION:
"I HEREBY CERTIFY THAT THE IMPROVEMENTS OF PIONEER FLEXSPACE (PHASE 5) HAVE BEEN INSPECTED BY FREELAND & ASSOCIATES, INC. AND CONSTRUCTED IN GENERAL CONFORMANCE WITH THE PLANS APPROVED BY PUBLIC WORKS DIRECTOR FOR SAID DEVELOPMENT AND THE GENERAL SPECIFICATIONS ADOPTED BY THE CITY OF FERNDALE DEPARTMENT OF PUBLIC WORKS."

BY: _____ DATE: 8-30-21

APPROVED
AUG 31 2021
BY: CITY OF FERNDALE
PUBLIC WORKS DEPARTMENT

AS-BUILT DRAWING

AS-BUILT NOTE:
ONLY INFORMATION NOTED AS AS-BUILT "(AB)" HAS BEEN PROVIDED BY PROJECT SURVEYOR. DATE OF POINT FILES 10/1/2019, 10/18/2019, 10/23/2020, 07/12/2021. CONTRACTOR PROVIDED ADDITIONAL MEASURE DOWNS 10/21/2019.

220 West Champion Street, Suite 200 t: 360.650.1408
Bellingham, WA 98225 f: 360.650.1401
FREELAND & ASSOCIATES

REV:	DATE:	DESCRIPTION:	BY:

CLIENT: PIONEER POST FRAME
6208 PORTAL WAY
FERNDALE, WASHINGTON

CALL BEFORE YOU DIG
FOR BURIED UTILITY LOCATIONS
1-800-424-5555

PROJECT LOCATION: PIONEER FLEXSPACE, LLC
6407 PORTAL WAY
FERNDALE, WASHINGTON

DRAWING #: 18084SP26 (PH5).DWG
DRAWN BY: CJL
DESIGNED BY: HAF
CHECKED BY: HAF

SHEET CONTENTS: UTILITY PLAN OVERVIEW

HARVILL A. FREELAND III
STATE OF WASHINGTON
28519
REGISTERED PROFESSIONAL ENGINEER

JOB #: 18084	DATE: 8-30-2021
SCALE: HORIZ: 1"=40' VERT: N/A	SHEET: C12

00716.012 08/31/2021 RH

00716.013 08/31/2021 RH

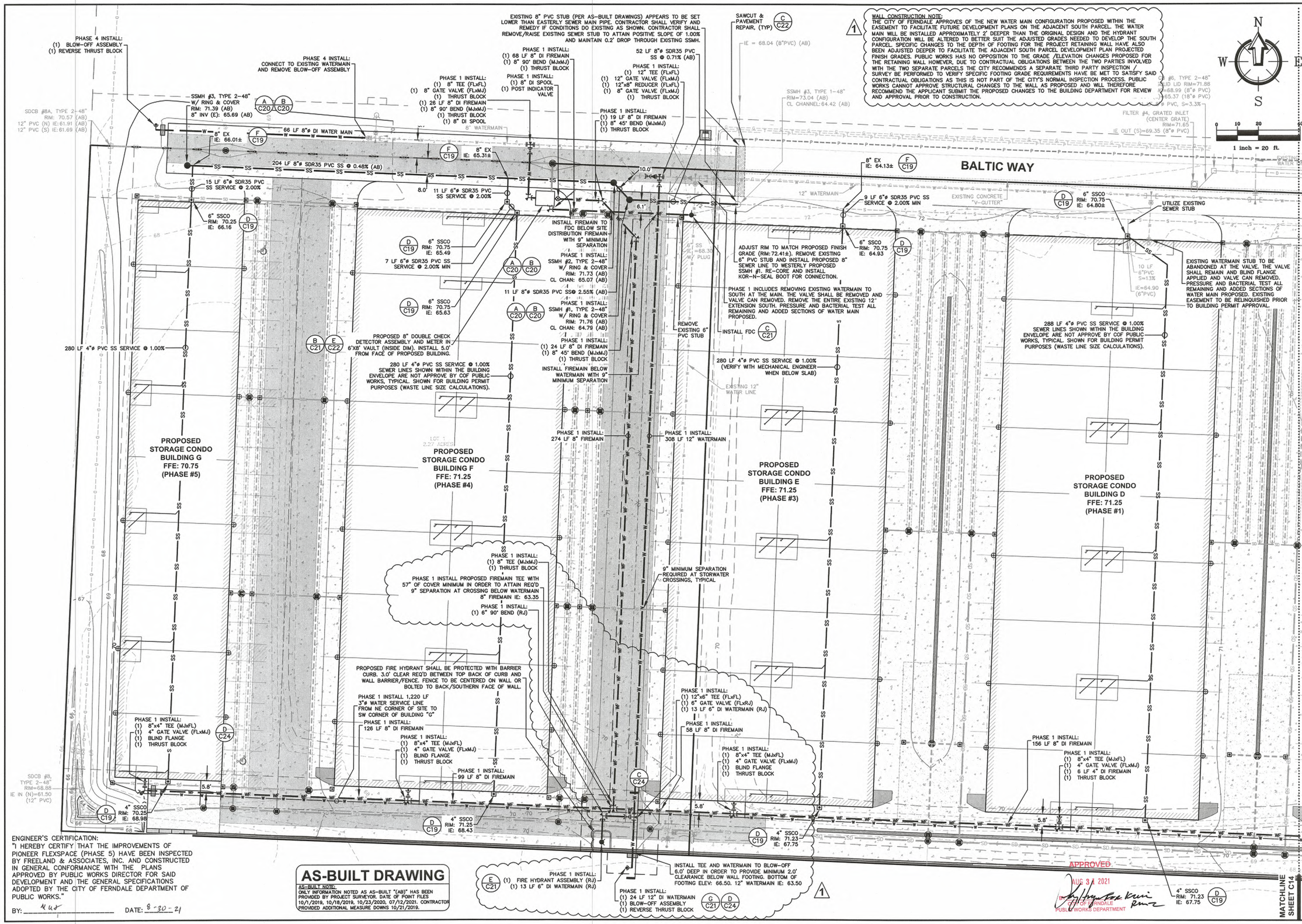

ENGINEER'S CERTIFICATION:
"I HEREBY CERTIFY THAT THE IMPROVEMENTS OF PIONEER FLEXSPACE (PHASE 5) HAVE BEEN INSPECTED BY FREELAND & ASSOCIATES, INC. AND CONSTRUCTED IN GENERAL CONFORMANCE WITH THE PLANS APPROVED BY PUBLIC WORKS DIRECTOR FOR SAID DEVELOPMENT AND THE GENERAL SPECIFICATIONS ADOPTED BY THE CITY OF FERNDALE DEPARTMENT OF PUBLIC WORKS."

BY: _____ DATE: 8-30-21

AS-BUILT DRAWING

AS-BUILT NOTE:
ONLY INFORMATION NOTED AS AS-BUILT "(AB)" HAS BEEN PROVIDED BY PROJECT SURVEYOR. DATE OF POINT FILES 10/1/2019, 10/18/2019, 10/23/2020, 07/12/2021. CONTRACTOR PROVIDED ADDITIONAL MEASURE DOWNS 10/21/2019.

MATCHLINE SHEET C14

220 West Champion Street, Suite 200 t: 360.650.1408
Bellingham, WA 98225 f: 360.650.1401
FREELAND & ASSOCIATES

REV:	DATE:	DESCRIPTION:	BY:
1	1/30/2019	CROSS SECTION REVISION PER OWNER REQUEST	HAF

CLIENT: PIONEER FLEXSPACE, LLC
6407 PORTAL WAY
FERNDALE, WASHINGTON

PROJECT LOCATION: PIONEER POST FRAME
6208 PORTAL WAY
FERNDALE, WASHINGTON

CALL BEFORE YOU DIG
FOR BURIED UTILITY LOCATIONS
1-800-424-5555

DRAWING #: 18084SP26 (PH5).DWG
DRAWN BY: CJL
DESIGNED BY: HAF
CHECKED BY: HAF

SHEET CONTENTS: UTILITY PLAN (WEST)

HARRY A. FREELAND III
STATE OF WASHINGTON
28519
REGISTERED PROFESSIONAL ENGINEER

JOB #:	DATE:
18084	8-30-2021
SCALE: HORIZ: 1"=20' VERT: N/A	SHEET: C13

00716.014 08/31/2021 RH

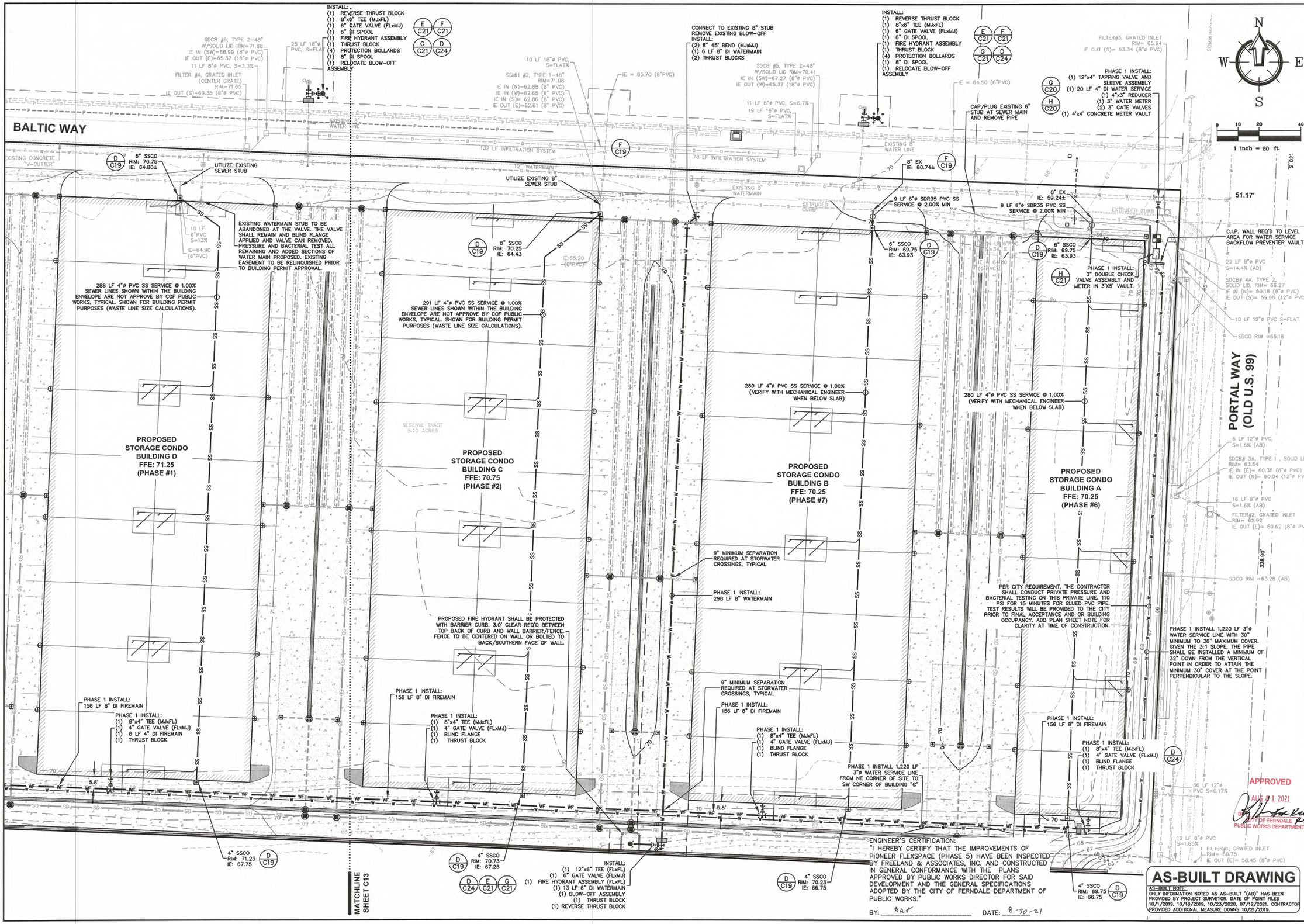

220 West Champion Street, Suite 200 Bellingham, WA 98225
t: 360.650.1408 f: 360.650.1401
FREELAND & ASSOCIATES

REV:	DATE:	DESCRIPTION:	BY:

CLIENT: PIONEER POST FRAME, 6208 PORTAL WAY, FERNDALE, WASHINGTON

CALL BEFORE YOU DIG FOR BURIED UTILITY LOCATIONS 1-800-424-5555

PROJECT LOCATION: PIONEER FLEXSPACE, LLC, 6407 PORTAL WAY, FERNDALE, WASHINGTON

DRAWING #: 180845P26 (PH5).DWG
DRAWN BY: CJL
CHECKED BY: HAF
DESIGNED BY: HAF

SHEET CONTENTS: UTILITY PLAN (EAST)

JOB #:	DATE:
18084	8-30-2021
SCALE: HORIZ: 1"=20' VERT: N/A	SHEET: C14

NOTES:
1. THE DESIGN INTENT REPRESENTED IN THIS SECTION IS TO HORIZONTALLY SEPARATE THE ROOF RUNOFF WATER FROM THE VEHICULAR PAVEMENT RUNOFF.
2. TOP OF WASHED ROCK FOR ROOF RUNOFF INFILTRATION TRENCHES SHALL BE INSTALLED A MINIMUM OF 1'.0 ABOVE PERFORATED PIPE INVERT ELEVATION, TYPICAL.
3. SEE DRAINAGE PLAN SHEETS C8 & C9 FOR SPECIFIED OVERFLOW ELEVATION.
4. THE OVERFLOW CATCH BASIN DETAIL SPECIFIES THE TOP OF WASHED ROCK TO BE SET 0.2' ABOVE THE OVERFLOW ELEVATION SPECIFIED AT EACH OVERFLOW CATCH BASIN.
5. THE GROUND WATER DEPTH IDENTIFIED IN THIS SECTION IS BASED ON GEOTECHNICAL REPORT (SOIL INFILTRATION EVALUATION) PROVIDED BY SOUND GEOLOGY, DATED APRIL 13TH, 2018.

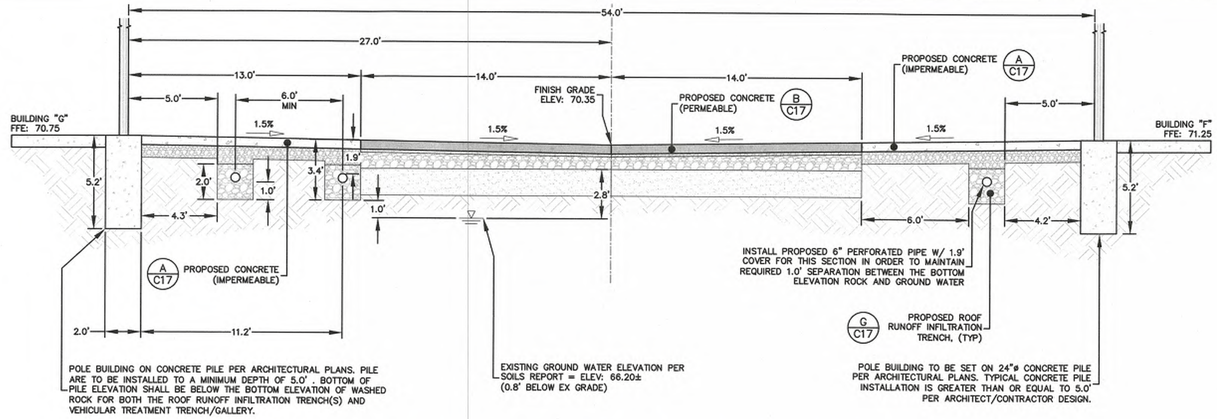

(A) PAVEMENT SECTION BUILDING "G" TO BUILDING "F"

SCALE 1" = 4'

0 2 4 8
1 inch = 4 ft.

INSPECTION NOTE:
1. UNDERGROUND INFILTRATION AREAS AS DESIGNED THROUGH OUT THE PROJECT WILL REQUIRE SPECIAL INSPECTION REQUIREMENTS. THE CITY WILL INSPECT STRUCTURES AND CONVEYANCE ONLY FOR CITY DOCUMENTATION. ALL THINGS RELATED TO SPECIFIC SOILS, GRAVELS AND PLACEMENT OF SAID MATERIALS WILL BE DONE BY THE ENGINEER OF RECORD OR A LICENSED GEOTECHNICAL ENGINEER. CERTIFICATION FOR ALL INFILTRATION FACILITIES FOR THE PROJECT WILL BE CERTIFIED BY THE ENGINEER OF RECORD PRIOR TO FINAL PROJECT ACCEPTANCE BY THE CITY.

NOTES:
1. THE DESIGN INTENT REPRESENTED IN THIS SECTION IS TO HORIZONTALLY SEPARATE THE ROOF RUNOFF WATER FROM THE VEHICULAR PAVEMENT RUNOFF. THE TRENCHES HAVE BEEN MOVED TO WEST SIDE OF THE DRIVE ISLE IN ORDER TO PROVIDE SEPARATION FROM THE WATERMAIN.
2. TOP OF WASHED ROCK FOR ROOF RUNOFF INFILTRATION TRENCHES SHALL BE INSTALLED A MINIMUM OF 1'.0 ABOVE PERFORATED PIPE INVERT ELEVATION, TYPICAL.
3. SEE DRAINAGE PLAN SHEETS C8 & C9 FOR SPECIFIED OVERFLOW ELEVATION.
4. THE OVERFLOW CATCH BASIN DETAIL SPECIFIES THE TOP OF WASHED ROCK TO BE SET 0.2' ABOVE THE OVERFLOW ELEVATION SPECIFIED AT EACH OVERFLOW CATCH BASIN..
5. THE GROUND WATER DEPTH IDENTIFIED IN THIS SECTION IS BASED ON GEOTECHNICAL REPORT (SOIL INFILTRATION EVALUATION) PROVIDED BY SOUND GEOLOGY, DATED APRIL 13TH, 2018.

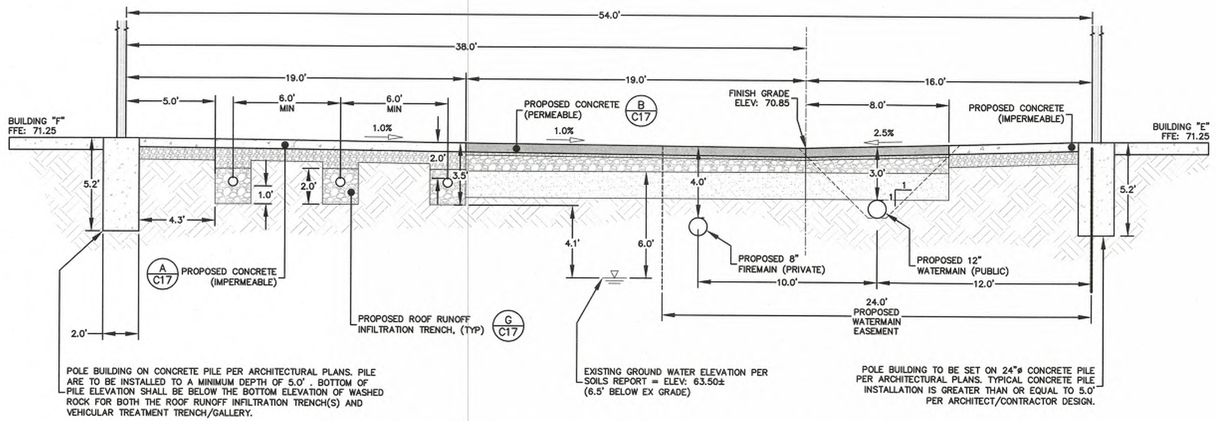

(B) PAVEMENT SECTION BUILDING "F" TO BUILDING "E"

SCALE 1" = 4'

0 2 4 8
1 inch = 4 ft.

NOTES:
1. THIS SECTION IS TYPICAL FOR NORTHERN END OF MOST DRIVE ISLES OTHER THAN THE TWO WITH WATERMAINS AND WHERE PERMEABLE PAVEMENT IS PROPOSED. SEE SHEET C16, DETAIL "B" FOR WATERMAIN AND ROOF INFILTRATION TRENCH SEPARATION AS WELL AS WATERMAIN OFFSET FROM BUILDING PILING.
2. TOP OF WASHED ROCK FOR ROOF RUNOFF INFILTRATION TRENCHES SHALL BE INSTALLED A MINIMUM OF 1'.0 ABOVE PERFORATED PIPE INVERT ELEVATION, TYPICAL.
3. SEE DRAINAGE PLAN SHEETS C8 & C9 FOR SPECIFIED OVERFLOW ELEVATION.
4. THE OVERFLOW CATCH BASIN DETAIL SPECIFIES THE TOP OF WASHED ROCK TO BE SET 0.2' ABOVE THE OVERFLOW ELEVATION SPECIFIED AT EACH OVERFLOW CATCH BASIN.
5. TWO SIMILAR PAVEMENT/SITE SECTIONS ARE LOCATED BETWEEN BUILDING "A" AND "B" AS WELL AS BUILDING "C" AND "D". GROUND WATER DEPTH FROM EXISTING GRADE IS 8.4' DEEP AND 8.0' DEEP RESPECTIVELY. SEE GROUND WATER TO FINISH GRADE INFORMATION FOR THE AFOREMENTIONED SITE SECTIONS TO THE RIGHT OF THIS PARTICULAR SITE SECTION.
6. THE PAVEMENT SECTION/SITE SECTION BETWEEN BUILDING "A" AND "B" WILL REQUIRE ADDITIONAL WASHED ROCK DUE TO PROPOSED HEIGHT OF THE 12" OVERFLOW PIPE. THE TOP OF WASHED ROCK IN THE ROOF RUNOFF INFILTRATION TRENCH(S) SHALL BE RAISED TO ATTAIN POSITIVE DRAINAGE/SLOPE.
7. THE GROUND WATER DEPTH FOR THE REMAINING DRIVE ISLES TO THE EAST PROGRESSIVELY GETS DEEPER. SEE GEOTECHNICAL REPORT (SOIL INFILTRATION EVALUATION) PROVIDED BY SOUND GEOLOGY, DATED APRIL 13TH, 2018.

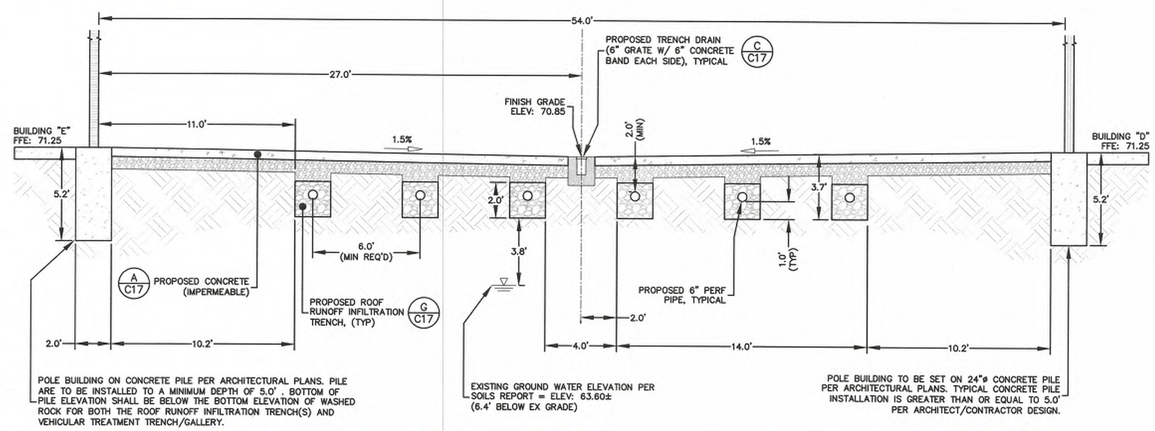

(C) PAVEMENT SECTION BUILDING "E" TO BUILDING "D"

SCALE 1" = 4'

0 2 4 8
1 inch = 4 ft.

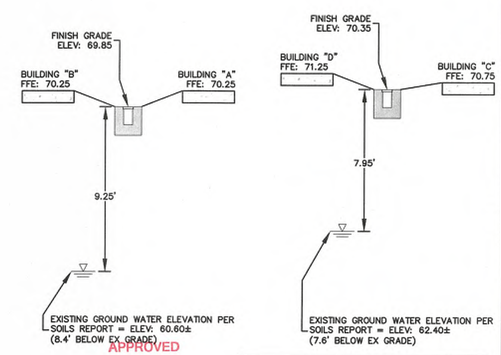

APPROVED
AUG 31 2021
CITY OF FERNDALE
PUBLIC WORKS DEPARTMENT

AS-BUILT DRAWING

AS-BUILT NOTE:
ONLY INFORMATION NOTED AS AS-BUILT "(AB)" HAS BEEN PROVIDED BY PROJECT SURVEYOR. DATE OF POINT FILES 10/1/2019, 10/18/2019, 10/23/2020, 07/12/2021. CONTRACTOR PROVIDED ADDITIONAL MEASURE DOWNS 10/21/2019.

220 West Champion Street, Suite 200 T: 360.650.1408
Bellingham, WA 98225 F: 360.650.1401
FREELAND & ASSOCIATES

REV:	DATE:	DESCRIPTION:	BY:

CLIENT: PIONEER POST FRAME
6208 PORTAL WAY
FERNDALE, WASHINGTON

CALL BEFORE YOU DIG
FOR BURIED UTILITY LOCATIONS
1-800-424-5555

PROJECT LOCATION: PIONEER FLEXSPACE, LLC
6407 PORTAL WAY
FERNDALE, WASHINGTON

DRAWING #: 18084SP26 (PH5).DWG
DRAWN BY: CJL
DESIGNED BY: HAF
CHECKED BY: HAF

SHEET CONTENTS: SITE SECTIONS (BUILDING TO BUILDING)

BARRYLL A. FREELAND III
STATE OF WASHINGTON
28519
REGISTERED PROFESSIONAL ENGINEER

JOB #: 18084
DATE: 8-30-2021
SCALE: HORIZ: 1"=4' VERT: N/A
SHEET: C15

00716.015 08/31/2021 RH

NOTES:
1. THIS SECTION IS TYPICAL FOR SOUTHERN END OF TWO OTHER DRIVE ISLES. SEE SHEET C15 FOR PERMEABLE PAVEMENT/SITE SECTIONS. SEE SHEET C16, DETAIL "C" FOR SITE SECTION WITH WATERMAIN WHICH INCLUDES VEHICULAR PAVEMENT INFILTRATION TRENCH SEPARATION AS WELL AS WATERMAIN OFFSET FROM BUILDING PILING.
2. SEE DRAINAGE PLAN SHEETS C8 & C9 FOR SPECIFIED OVERFLOW ELEVATION.
3. THE OVERFLOW CATCH BASIN DETAIL SPECIFIES THE TOP OF WASHED ROCK TO BE SET 0.2' ABOVE THE OVERFLOW ELEVATION SPECIFIED AT EACH OVERFLOW CATCH BASIN.
4. TWO SIMILAR PAVEMENT/SITE SECTIONS ARE LOCATED BETWEEN BUILDING "A" AND "B" AS WELL AS BUILDING "C" AND "D". GROUND WATER DEPTH FROM EXISTING GRADE IS 10.0' DEEP AND 9.5' DEEP RESPECTIVELY. SEE GROUND WATER TO FINISH GRADE INFORMATION FOR THE AFOREMENTIONED SITE SECTIONS TO THE RIGHT OF THIS PARTICULAR SITE SECTION.
5. THE PAVEMENT SECTION/SITE SECTION BETWEEN BUILDING "A" AND "B" WILL REQUIRE ADDITIONAL WASHED ROCK DUE TO PROPOSED HEIGHT OF THE 12" OVERFLOW PIPE. THE TOP OF THE WASHED ROCK IN THE PAVEMENT INFILTRATION TRENCH/GALLERY SHALL BE RAISED TO ATTAIN POSITIVE DRAINAGE/SLOPE.
5. WASHED ROCK CAN REPLACE A PORTION OF THE 8" GRAVEL BASE SHOWN FOR TYPICAL CONCRETE PAVEMENT (IMPERMEABLE CONCRETE) IF NECESSARY TO ACHIEVE OVERFLOW ELEVATION. THE CRUSHED ROCK ROCK SECTION BELOW CONCRETE CAN BE REDUCED BUT SHALL HAVE MINIMUM 2" GRAVEL/ CHOKER COURSE.
6. THE GROUND WATER DEPTH FOR THE REMAINING DRIVE ISLES TO THE EAST PROGRESSIVELY GETS DEEPER. SEE GEOTECHNICAL REPORT (SOIL INFILTRATION EVALUATION) PROVIDED BY SOUND GEOLOGY, DATED APRIL 13TH, 2018.

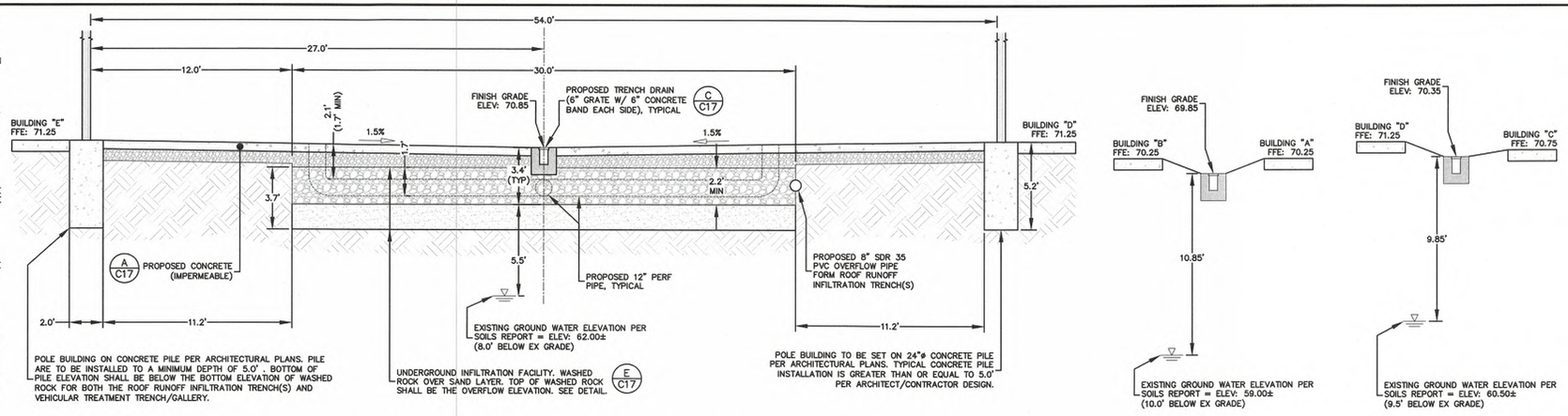

A PAVEMENT SECTION BUILDING "E" TO BUILDING "D"
SCALE 1" = 4'

0 2 4 8
1 inch = 4 ft.

NOTES:
1. THIS SECTION IS ATYPICAL DUE TO THE PROPOSED WATERMAIN TO BE INSTALLED ALONG THE EASTERN SIDE OF THE DRIVE ISLE. THE INTENT OF THIS SECTION IS TO SHOW ROOF RUNOFF INFILTRATION TRENCH SEPARATION AS WELL AS WATERMAIN OFFSET FROM BUILDING PILING.
2. TOP OF WASHED ROCK FOR ROOF RUNOFF INFILTRATION TRENCHES SHALL BE INSTALLED A MINIMUM OF 1'.0 ABOVE PERFORATED PIPE INVERT ELEVATION, TYPICAL.
3. SEE DRAINAGE PLAN SHEETS C8 & C9 FOR SPECIFIED OVERFLOW ELEVATION.
4. THE OVERFLOW CATCH BASIN DETAIL SPECIFIES THE TOP OF WASHED ROCK TO BE SET 0.2' ABOVE THE OVERFLOW ELEVATION SPECIFIED AT EACH OVERFLOW CATCH BASIN. THE WASHED ROCK FOR THE ROOF RUNOFF INFILTRATION TRENCH HAS BEEN RAISED TO ATTAIN POSITIVE DRAINAGE/SLOPE DUE TO THE FACT THAT THE CONNECTION POINT TO THE MAIN OVERFLOW PIPE HAS HIGHER INVERT ELEVATION THAN THE ROOF RUNOFF TRENCH PIPE(S).
5. WASHED ROCK CAN REPLACE A PORTION OF THE 8" GRAVEL BASE SHOWN FOR TYPICAL CONCRETE PAVEMENT (IMPERMEABLE CONCRETE) IF NECESSARY TO ACHIEVE OVERFLOW ELEVATION. THE CRUSHED ROCK ROCK SECTION BELOW CONCRETE CAN BE REDUCED BUT SHALL HAVE MINIMUM 2" GRAVEL/ CHOKER COURSE.
6. THE GROUND WATER DEPTH FOR THE REMAINING DRIVE ISLES TO THE EAST PROGRESSIVELY GETS DEEPER. SEE GEOTECHNICAL REPORT (SOIL INFILTRATION EVALUATION) PROVIDED BY SOUND GEOLOGY, DATED APRIL 13TH, 2018.

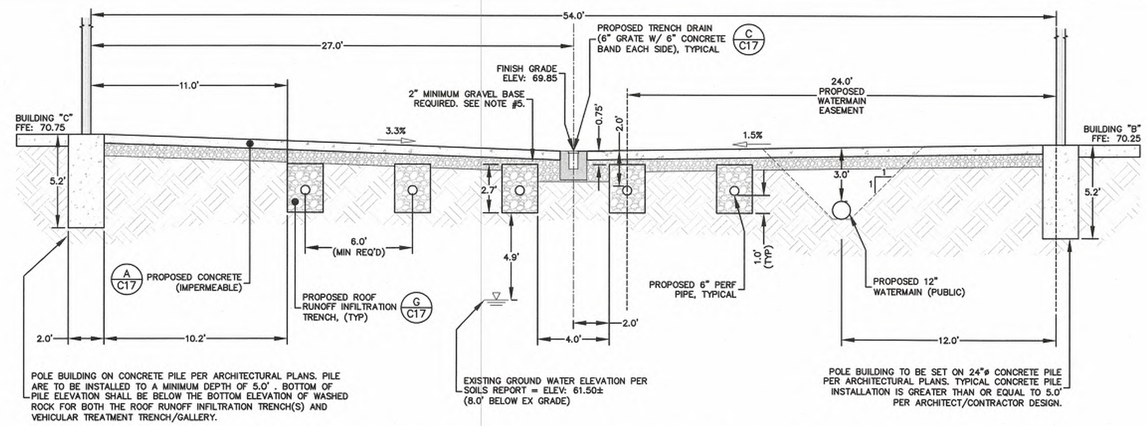

INSPECTION NOTE:
1. UNDERGROUND INFILTRATION AREAS AS DESIGNED THROUGH OUT THE PROJECT WILL REQUIRE SPECIAL INSPECTION REQUIREMENTS. THE CITY WILL INSPECT STRUCTURES AND CONVEYANCE ONLY FOR CITY DOCUMENTATION. ALL THINGS RELATED TO SPECIFIC SOILS, GRAVELS AND PLACEMENT OF SAID MATERIALS WILL BE DONE BY THE ENGINEER OF RECORD OR A LICENSED GEOTECHNICAL ENGINEER. CERTIFICATION FOR ALL INFILTRATION FACILITIES FOR THE PROJECT WILL BE CERTIFIED BY THE ENGINEER OF RECORD PRIOR TO FINAL PROJECT ACCEPTANCE BY THE CITY.

B PAVEMENT SECTION BUILDING "C" TO BUILDING "B"
SCALE 1" = 4'

0 2 4 8
1 inch = 4 ft.

NOTES:
1. THIS SECTION IS ATYPICAL DUE TO THE PROPOSED WATERMAIN TO BE INSTALLED ALONG THE EASTERN SIDE OF THE DRIVE ISLE. THE INTENT OF THIS SECTION IS TO SHOW PAVEMENT RUNOFF INFILTRATION TRENCH SEPARATION AS WELL AS WATERMAIN OFFSET FROM BUILDING PILING.
2. SEE DRAINAGE PLAN SHEETS C8 & C9 FOR SPECIFIED OVERFLOW ELEVATION.
3. THE OVERFLOW CATCH BASIN DETAIL SPECIFIES THE TOP OF WASHED ROCK TO BE SET 0.2' ABOVE THE OVERFLOW ELEVATION SPECIFIED AT EACH OVERFLOW CATCH BASIN. THE WASHED ROCK FOR THE PAVEMENT RUNOFF INFILTRATION TRENCH/GALLERY HAS BEEN RAISED TO ATTAIN POSITIVE DRAINAGE/SLOPE DUE TO THE FACT THAT THE CONNECTION POINT TO THE MAIN OVERFLOW PIPE HAS HIGHER INVERT ELEVATION AT THIS LOCATION.
5. WASHED ROCK CAN REPLACE A PORTION OF THE 8" GRAVEL BASE SHOWN FOR TYPICAL CONCRETE PAVEMENT (IMPERMEABLE CONCRETE) IF NECESSARY TO ACHIEVE OVERFLOW ELEVATION. THE CRUSHED ROCK ROCK SECTION BELOW CONCRETE CAN BE REDUCED BUT SHALL HAVE MINIMUM 2" GRAVEL/ CHOKER COURSE.
6. THE GROUND WATER DEPTH FOR THE REMAINING DRIVE ISLES TO THE EAST PROGRESSIVELY GETS DEEPER. SEE GEOTECHNICAL REPORT (SOIL INFILTRATION EVALUATION) PROVIDED BY SOUND GEOLOGY, DATED APRIL 13TH, 2018.

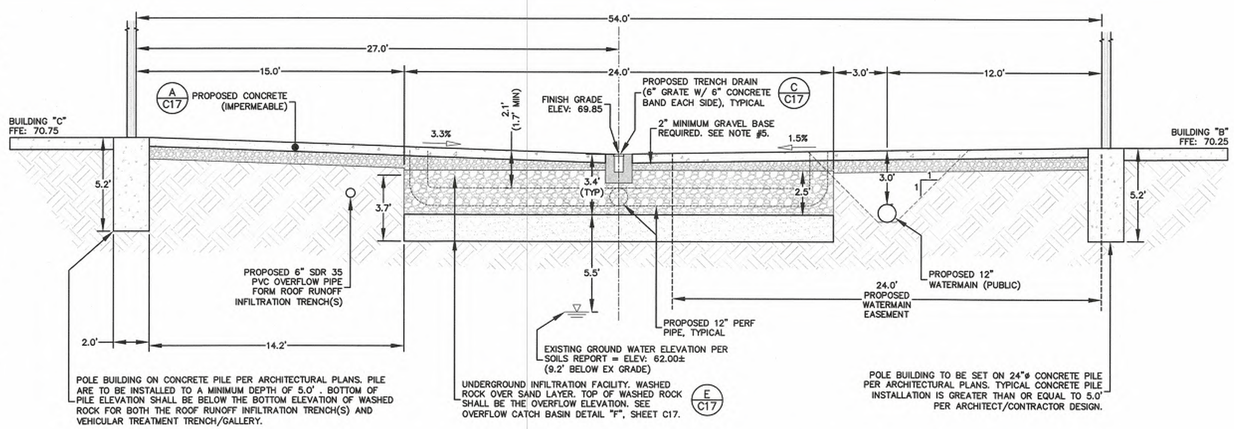

C PAVEMENT SECTION BUILDING "C" TO BUILDING "B"
SCALE 1" = 4'

0 2 4 8
1 inch = 4 ft.

APPROVED
AUG 31 2021
CITY OF FERNDALE
PUBLIC WORKS DEPARTMENT

AS-BUILT DRAWING
AS-BUILT NOTE:
ONLY INFORMATION NOTED AS AS-BUILT "(AB)" HAS BEEN PROVIDED BY PROJECT SURVEYOR. DATE OF POINT FILES 10/1/2019, 10/18/2019, 10/23/2020, 07/12/2021. CONTRACTOR PROVIDED ADDITIONAL MEASURE DOWNS 10/21/2019.

220 West Champion Street, Suite 200 t: 360.650.1408
Bellingham, WA 98225 f: 360.650.1401
FREELAND & ASSOCIATES

REV:	DATE:	DESCRIPTION:	BY:

CLIENT: PIONEER POST FRAME
6208 PORTAL WAY
FERNDALE, WASHINGTON

CALL BEFORE YOU DIG
FOR BURIED UTILITY LOCATIONS
1-800-424-5555

PROJECT LOCATION: PIONEER FLEXSPACE, LLC
6407 PORTAL WAY
FERNDALE, WASHINGTON

DRAWING #: 18084SP26 (PHS).DWG
DRAWN BY: CJL
DESIGNED BY: HAF
CHECKED BY: HAF

SHEET CONTENTS: SITE SECTIONS (BUILDING TO BUILDING)

MARTIN A. FREELAND III
STATE OF WASHINGTON
28519
REGISTERED PROFESSIONAL ENGINEER

JOB #:	DATE:
18084	8-30-2021
SCALE: HORIZ: 1"=4' VERT: N/A	SHEET: C16

00716.016 08/31/2021 RH

NOTES:

1. ALL DEPTHS REPRESENT COMPACTED THICKNESSES.
2. CONTRACTOR MAY INSTALL EITHER PAVEMENT SECTION. CONTINUOUS AREAS OF NEW PAVEMENT SHALL BE PAVED WITH A SINGLE SURFACING MATERIAL (i.e. EITHER CONCRETE OR ASPHALT).
3. CONTROL JOINTS SHALL BE 1/4 DEPTH OF SLAB.
4. ALL CONSTRUCTION JOINTS SHALL BE DOWELED.

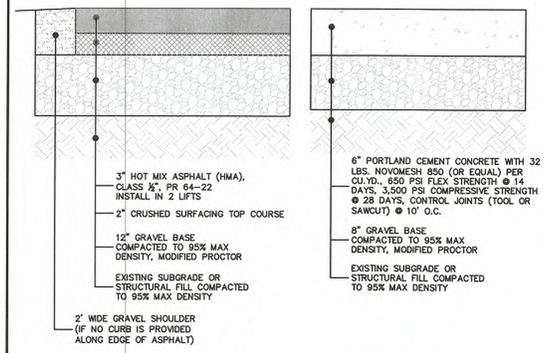

SUBGRADE AND GRAVEL BASE NOTES:

(1) STRUCTURAL FILL SHALL BE PLACED IN HORIZONTAL LIFTS APPROXIMATELY 8 TO 10 INCHES IN LOOSE THICKNESS AND THOROUGHLY COMPACTED. THE FILL SHALL BE COMPACTED TO A MINIMUM OF 92 PERCENT, EXCEPT THE UPPER 24 INCHES OF SUBGRADE, WHICH SHALL BE COMPACTED TO A MINIMUM OF 95% OF THE MAXIMUM DRY DENSITY.

(2) STRUCTURAL FILL SHALL CONSIST OF CLEAN, WELL-GRADED SANDY GRAVEL, GRAVELLY SAND, OR OTHER APPROVED NATURALLY OCCURRING GRANULAR MATERIAL (PIT RUN) WITH AT LEAST 40 PERCENT RETAINED ON THE NO. 4 SIEVE, OR A WELL-GRADED CRUSHED ROCK.

(3) DRY WEATHER STRUCTURAL FILL MAY CONTAIN UP TO 10% FINES PASSING THE U.S. NO. 200 SIEVE. WET WEATHER STRUCTURAL FILL MAY NOT CONTAIN MORE THAN 5 PERCENT FINES PASSING THE U.S. NO. 200 SIEVE. THE CONTRACTOR SHALL MONITOR THE WEATHER AND DETERMINE THE APPROPRIATE FILL TO UTILIZE ON SITE TO ENSURE THAT THE ABOVE COMPACTION REQUIREMENTS ARE MET.

(4) IF APPROVED BY A GEOTECHNICAL ENGINEER, STRUCTURAL FILL NOT MEETING THE ABOVE REQUIREMENTS CAN BE USED FOR FILL BELOW 24" OF FINAL GRADE. THE CONTRACTOR SHALL NOTIFY THE ENGINEER OF RECORD IN WRITING. GEOTECHNICAL RECOMENDATIONS/APPROVAL SHALL ACCOMPANY THE NOTIFICATION.

(A) ON-SITE PAVEMENT SECTIONS
nts

GENERAL NOTES:

1. ALL DEPTHS REPRESENT COMPACTED DEPTHS.
2. CONTROL JOINTS (TOOLED) SHALL BE 10' O.C. MAXIMUM. CONTROL JOINTS SHALL BE 1/4 DEPTH OF SLAB. ALL CONSTRUCTION JOINTS SHALL BE DOWELED.
3. CHOKER COURSE SHALL CONSIST OF 1.5 INCH TO 0.25 INCH UNIFORMLY GRADED CRUSHED WASHED STONE OR SIMILAR.
4. ALL TOPSOIL SHALL BE REMOVED UNDER PAVEMENT SECTION.
5. AFTER GRADING, THE EXISTING SUBRADE SHALL NOT BE COMPACTED OR SUBJECTED TO EXCESSIVE CONSTRUCTION EQUIPMENT TRAFFIC.
6. IMMEDIATELY BEFORE BASE AGGREGATE AND CONCRETE PLACEMENT, REMOVE ANY ACCUMULATION OF FINE MATERIAL FROM EROSION WITH LIGHT EQUIPMENT AND SCARIFY SOIL TO A MINIMUM DEPTH OF 6 INCHES.
7. EROSION AND INTRODUCTION OF SEDIMENT SHALL BE STRICTLY CONTROLLED DURING AND AFTER CONSTRUCTION TO PREVENT CLOGGING OF THE VOID SPACES IN THE BASE MATERIAL AND PERMEABLE SURFACE.
8. A QUALIFIED GEOTECHNICAL PROFESSIONAL MUST BE PRESENT DURING THE EXCAVATION OF THE PERMEABLE CONCRETE SUBGRADE TO ENSURE THAT THE DESIGN ASSUMPTIONS MADE REGARDING THE LONG TERM INFILTRATION RATES, SOIL CONDITIONS, AND INFILTRATION CHARACTERISTICS MEET THE APPROVED DESIGN. THIS SHALL BE ACCOMPLISHED BY PROVIDING THE CITY A MEMORANDUM, SIGNED AND SEALED BY THE PROJECT GEOTECHNICAL ENGINEER OR GEOLOGIST STATING THE FOUND GEOLOGICAL CONDITIONS MATCH THE APPROVED DESIGN.
9. ORGANIC CONTENT OF THE TREATMENT SOIL (STM D 2974): ORGANIC MATTER CAN INCREASE THE SORPTIVE CAPACITY OF THE SOIL FOR SOME POLLUTANTS. A MINIMUM OF 1.0 PERCENT ORGANIC CONTENT IS NECESSARY AND SHALL BE INCLUDED IN THE SAND MIX.

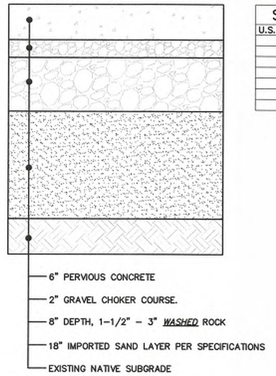

SAND SPECIFICATION

U.S. SIEVE NUMBER	PERCENT PASSING
4	95 – 100
8	70 – 100
16	40 – 90
30	25 – 75
50	2– 25
100	< 4
200	< 2

(B) PERMEABLE CONCRETE SECTION
nts

NOTES:

1. BOTTOM OF TRENCH DRAIN SHALL BE SLOPED AT 0.5% AND DRAIN TO THE LOW POINT.
2. LOW POINT IS TO BE LOCATED OVER THE PROPOSED STORMWATER TREATMENT AND INFILTRTION TRENCH LOCATED APPROXIMATELY 30.8' FROM SOUTHERN END OF BUILDING(S).

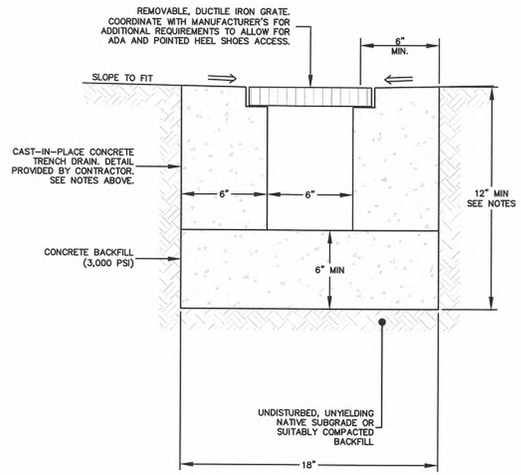

(C) PRE-FORMED TRENCH DRAIN
nts

AS-BUILT DRAWING

AS-BUILT NOTE:
ONLY INFORMATION NOTED AS AS-BUILT "(AB)" HAS BEEN PROVIDED BY PROJECT SURVEYOR. DATE OF POINT FILES 10/1/2019, 10/18/2019, 10/23/2020, 07/12/2021. CONTRACTOR PROVIDED ADDITIONAL MEASURE DOWNS 10/21/2019.

NOTE:
PIPE SIZE VARIES – SEE STORM DRAIN PLANS FOR SPECIFIC SIZES

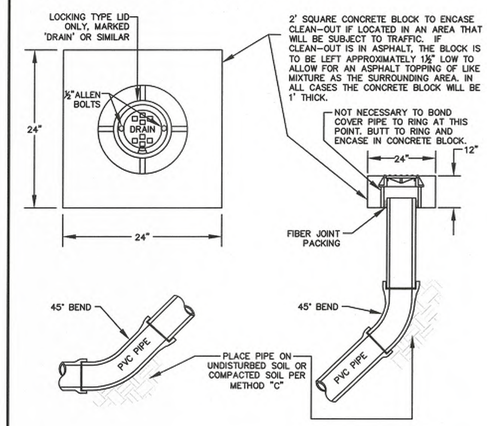

(D) TYPICAL STORMWATER CLEANOUT
nts

NOTES:

1. EXISTING SOILS SHALL BE INSPECTED AND TESTED AT THE BASE OF INFILTRATION FACILITIES AS NEEDED BY A LICENSED GEOTECHNICAL ENGINEER OR ENGINEERING GEOLOGIST PRIOR TO INSTALLATION OF THE PROPOSED STORM DRAIN INFILTRATION SYSTEM. THIS INSPECTION IS NECESSARY TO VERIFY THAT EXISTING SOILS ON SITE MATCH THE DESIGN ASSUMPTIONS FOR THIS PROJECT.
2. STORMWATER INFILTRATION TRENCHES SHALL BE LOCATED WHOLLY OUTSIDE OF STREET PRISMS.
3. PIPE PERFORATIONS FOR 8" PVC PIPE SHALL CONFORM TO AASHTO M278 (i.e. 4 ROWS OF PERFORATIONS, ⅜"ø HOLES, SPACED AT 3" ON CENTER).
4. PIPE PERFORATIONS FOR 12" CPP PIPE SHALL CONFORM TO AASHTO M252, CLASS I (i.e. 3 ROWS OF PERFORATIONS, ⅜"ø HOLES, LOCATED IN VALLEYS IN THE OUTER WALL).
5. NATIVE SOIL MAY BE USED AS TRENCH BACKFILL. NATIVE SOIL THAT WILL BE USED FOR BACKFILL SHALL MEET THE FOLLOWING SPECIFICATION:

U.S. SIEVE #	PERCENT PASSING
4	90 – 100
16	40 – 90
30	25 – 70
50	2 – 25
200	< 2

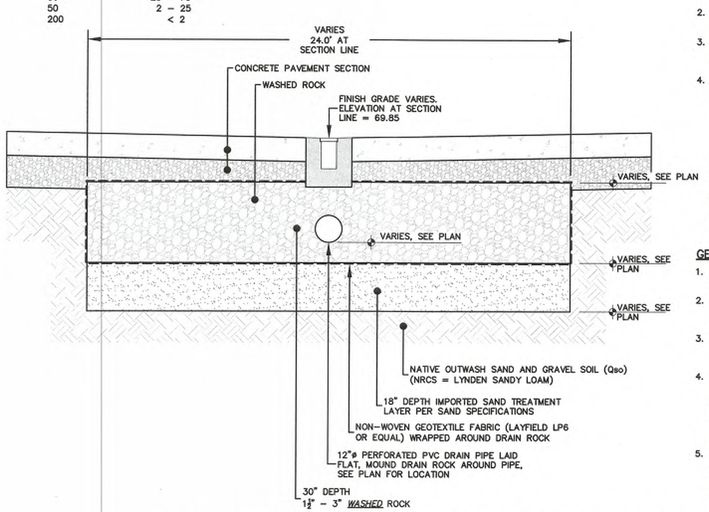

SAND FILTER TREATMENT LAYER SPECIFICATIONS

1. CONTRACTOR SHALL OBTAIN A GRAIN SIZE ANALYSIS FROM THE FILTER SAND SUPPLIER TO VERIFY THAT THE SAND SPECIFICATIONS ARE MET.
2. TREATMENT SAND RETAINED ON A U.S. SIEVE SHALL NOT CONTAIN MORE THAN 0.20 PERCENT (BY WEIGHT) OF WOOD WASTE.
3. WASTE FILL MATERIALS SHALL NOT BE USED AS INFILTRATION SOIL MEDIA NOR SHALL MEDIA BE PLACED OVER UNCONTROLLED OR NON-ENGINEERED FILL SOILS.
4. FILTER SAND MATERIAL SHALL MEET THE FOLLOWING GRADATION SPECIFICATION:

TREATMENT SAND SPECIFICATION

U.S. SIEVE NUMBER	PERCENT PASSING
4	95–100
8	70–100
16	40–90
30	25–75
50	2–25
100	<4
200	<2

GENERAL INSTALLATION NOTES

1. AFTER GRADING, THE EXISTING SUBGRADE SHALL NOT BE COMPACTED OR SUBJECTED TO EXCESSIVE CONSTRUCTION EQUIPMENT TRAFFIC.
2. IMMEDIATELY BEFORE BASE AGGREGATE AND ASPHALT PLACEMENT, REMOVE ANY ACCUMULATION OF FINE MATERIAL FROM EROSION WITH LIGHT EQUIPMENT AND SCARIFY SOIL TO A MINIMUM DEPTH OF 6 INCHES.
3. EROSION AND INTRODUCTION OF SEDIMENT SHALL BE STRICTLY CONTROLLED DURING AND AFTER CONSTRUCTION TO PREVENT CLOGGING OF THE VOID SPACES IN THE BASE MATERIAL AND PERMEABLE SURFACE.
4. WRAP EACH ROCK LAYER IN THE INFILTRATION TRENCHES WITH AN APPROVED, NON-WOVEN FILTER FABRIC ACCORDING TO THE MANUFACTURER'S SPECIFICATIONS. FILTER FABRIC MUST BE WRAPPED UP THE SIDES AND OVER THE TOP OF DRAIN ROCK TO PREVENT MIGRATION OF FINES INTO THE OPEN-GRADED ROCK MATERIAL. MAINTAIN PROPER COMPACTION AND AVOID DIFFERENTIAL SETTLING. OVERLAP ADJACENT STRIPS OF FABRIC AT LEAST 24 INCHES.
5. THE ENGINEER OF RECORD AND A LICENSED GEOTECHNICAL ENGINEER OR ENGINEERING GEOLOGIST SHALL VERIFY THAT NATIVE SOILS MEET DESIGN CRITERIA AND ASSUMPTIONS AT THE BASE OF THE INFILTRATION FACILITY. DESIGN CRITERIA AND ASSUMPTIONS ARE PROVIDED IN THE "STORMWATER SITE PLAN REPORT" PREPARED BY FREELAND & ASSOCIATES, INC.

(E) BELOW GRADE PAVEMENT RUNOFF INFILTRATION TRENCH/GALLERY
nts

OVERFLOW NOTES:

1. TOP OF WASHED ROCK SHALL BE SET 0.2' ABOVE SPECIFIED OVERFLOW ELEVATION. THIS IS TRUE FOR BOTH INFILTRATION TRENCH FACILITIES (ROOF RUNOFF INFILTRATION TRENCH OR PAVEMENT RUNOFF INFILTRATION TRENCH/GALLERY).
2. OVERFLOW ELEVATION IS SPECIFIED ON DRAINAGE PLAN SHEETS. SEE SHEETS C8 & C9.
3. INSTALL 8"ø SDR 35 PVC 90° ELBOW (GASKETED) AND CONNECT TO 8"ø SDR 35 PVC OVERFLOW PIPE, TYPCIAL.
4. THE CUT PIPE SECTION TO BE PLACED IN THE TOP OF ELBOW IS FOR ADJUSTING THE OVERFLOW ELEVATION TO MATCH SPECIFIED ELEVATION(S).

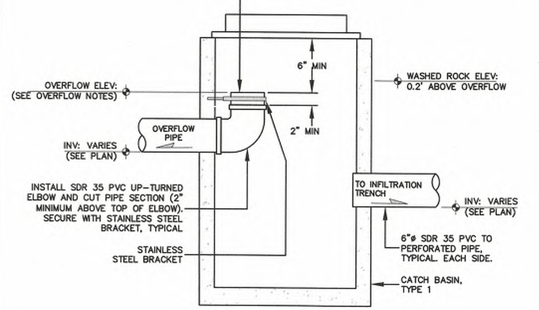

(F) TYPE 1 OVERFLOW CATCH BASIN
nts

INFILTRATION TRENCH CRITERIA

1. THE FOLLOWING MINIMUM LENGTHS (LINEAR FEET) PER 1,000 SQUARE FEET OF ROOF AREA BASED ON SOIL TYPE MAY BE USED FOR SIZING DOWNSPOUT INFILTRATION TRENCHES:

   COARSE SAND/COBBLES 20 LF
   MEDIUM SAND 30 LF
   FINE SAND/LOAMY SAND 75 LF

2. MAXIMUM LENGTH OF TRENCH MUST NOT EXCEED 100 FEET FROM THE INLET SUMP.
3. MINIMUM SPACING BETWEEN TRENCH CENTERLINES MUST BE 6 FEET.
4. FILTER FABRIC (GEOTEXTILE) MUST BE PLACED OVER THE DRAIN ROCK AS SHOWN IN THE "TYPICAL DOWNSPOUT INFILTRATION TRENCH" DETAIL SHOWN ABOVE PRIOR TO BACKFILLING.
5. INFILTRATION TRENCHES MAY BE PLACED IN FILL MATERIAL IF THE FILL IS PLACED AND COMPACTED UNDER THE DIRECT SUPERVISION OF A GEOTECHNICAL ENGINEER OR PROFESSIONAL CIVIL ENGINEER WITH GEOTECHNICAL EXPERTISE. TRENCH LENGTH IN FILL MUST BE 60 LINEAR FEET PER 1,000 SQUARE FEET OF ROOF AREA.
6. INFILTRATION TRENCHES SHOULD NOT BE BUILT ON SLOPES STEEPER THAN 25 PERCENT (4:1).
7. TRENCHES MAY BE LOCATED UNDER PAVEMENT IF A SMALL YARD DRAIN OR CATCH BASIN WITH GRATE COVER IS PLACED AT THE END OF THE TRENCH PIPE SUCH THAT OVERFLOW WOULD OCCUR OUT OF THE CATCH BASIN AT AN ELEVATION AT LEAST ONE FOOT BELOW THAT OF THE PAVEMENT, AND IN A LOCATION WHICH CAN ACCOMMODATE THE OVERFLOW WITHOUT CREATING A SIGNIFICANT ADVERSE IMPACT TO DOWNHILL PROPERTIES OR DRAINAGE SYSTEMS. THIS IS INTENDED TO PREVENT SATURATION OF THE PAVEMENT IN THE EVENT OF SYSTEM FAILURE.
8. DOWNSPOUT INFILTRATION TRENCHES SHALL BE AT LEAST 10 FEET FROM ANY PROPERTY LINE.

SOURCE: WASHINGTON STATE DEPARTMENT OF ECOLOGY (DOE) 2005 STORMWATER MANAGEMENT MANUAL FOR WESTERN WASHINGTON, VOLUME III, SECTION 3.1.1 "DOWNSPOUT INFILTRATION SYSTEMS"

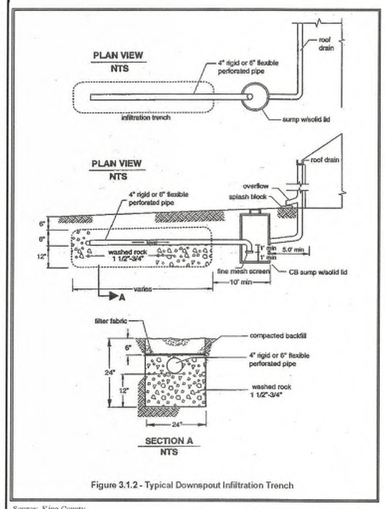

Figure 3.1.2 - Typical Downspout Infiltration Trench

Source: King County

Volume III – Hydrologic Analysis and Flow Control August 2012
3-7

APPROVED
AUG 31 2021
BY CITY OF FERNDALE
PUBLIC WORKS DEPARTMENT

(G) TYPICAL DOWNSPOUT INFILTRATION TRENCH
nts

220 West Champion Street, Suite 200 T: 360.650.1408
Bellingham, WA 98225 F: 360.650.1401
FREELAND & ASSOCIATES

REV:	DATE:	DESCRIPTION:	BY:

CLIENT: PIONEER POST FRAME
6208 PORTAL WAY
FERNDALE, WASHINGTON

CALL BEFORE YOU DIG
FOR BURIED UTILITY LOCATIONS
1-800-424-5555

PROJECT LOCATION: PIONEER FLEXSPACE, LLC
6407 PORTAL WAY
FERNDALE, WASHINGTON

DRAWN BY: CJL
CHECKED BY: HAF
DRAWING #: 18084SP26 (PH5).DWG
DESIGNED BY: HAF

SHEET CONTENTS: PAVING AND DRAINAGE DETAILS

HAROLD A. FREELAND III
STATE OF WASHINGTON
28512
REGISTERED PROFESSIONAL ENGINEER

JOB #: 18084	DATE: 8-30-2021
SCALE: HORIZ: N/A VERT: N/A	SHEET: C17

00716.017 08/31/2021 RH

NOTE:
INSTALL HERRINGBONE GRATE ULESS OTHERWISE NOTED. VANED GRATE WILL NOT BE INSTALLED FOR THIS PARTICULAR DESIGN. SOLID COVER OR HERRINGBONE GRATE WILL BE SPECIFIED.

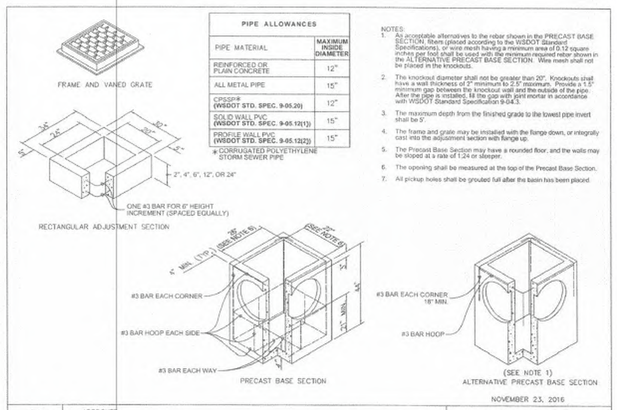

PIPE ALLOWANCES	
PIPE MATERIAL	MAXIMUM INSIDE DIAMETER
REINFORCED OR PLAIN CONCRETE	12"
ALL METAL PIPE	15"
CPSSP* (WSDOT STD. SPEC. 9-05.20)	12"
SOLID WALL PVC (WSDOT STD. SPEC. 9-05.12(1))	15"
PROFILE WALL PVC (WSDOT STD. SPEC. 9-05.12(2))	15"

* CORRUGATED POLYETHYLENE STORM SEWER PIPE

NOTES:
1. As acceptable alternatives to the rebar shown in the PRECAST BASE SECTION, fibers (placed according to the WSDOT Standard Specifications), or wire mesh having a minimum area of 0.12 square inches per foot, shall be used with the minimum required rebar shown in the ALTERNATIVE PRECAST BASE SECTION. Wire mesh shall not be placed in the knockouts.
2. The knockout diameter shall not be greater than 20". Knockouts shall have a wall thickness of 2" minimum to 2.5" maximum. Provide a 1.5" minimum gap between the knockout wall and the outside of the pipe. After the pipe is installed, fill the gap with joint mortar in accordance with WSDOT Standard Specification 9-04.3.
3. The maximum depth from the finished grade to the lowest pipe invert shall be 5'.
4. The frame and grate may be installed with the flange down, or integrally cast into the adjustment section with flange up.
5. The Precast Base Section may have a rounded floor, and the walls may be sloped at a rate of 1:24 or steeper.
6. The opening shall be measured at the top of the Precast Base Section.
7. All pickup holes shall be grouted full after the basin has been placed.

NOVEMBER 23, 2016

CITY OF FERNDALE WASHINGTON
APPROVED
Public Works Director — 8/11/17 Date

CATCH BASIN TYPE 1
STANDARD DETAIL ST-1
NOT TO SCALE

(A) CATCH BASIN TYPE 1
nts

NOTE:
INSTALL HERRINGBONE GRATE ULESS OTHERWISE NOTED. VANED GRATE WILL NOT BE INSTALLED FOR THIS PARTICULAR DESIGN. SOLID COVER OR HERRINGBONE GRATE WILL BE SPECIFIED.

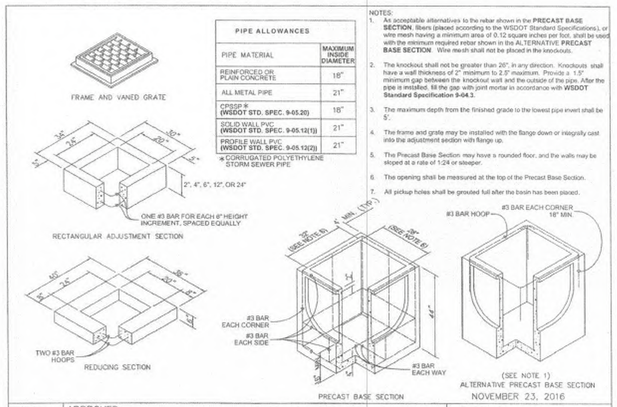

PIPE ALLOWANCES	
PIPE MATERIAL	MAXIMUM INSIDE DIAMETER
REINFORCED OR PLAIN CONCRETE	18"
ALL METAL PIPE	21"
CPSSP* (WSDOT STD. SPEC. 9-05.20)	18"
SOLID WALL PVC (WSDOT STD. SPEC. 9-05.12(1))	21"
PROFILE WALL PVC (WSDOT STD. SPEC. 9-05.12(2))	21"

* CORRUGATED POLYETHYLENE STORM SEWER PIPE

NOTES:
1. As acceptable alternatives to the rebar shown in the PRECAST BASE SECTION, fibers (placed according to the WSDOT Standard Specifications), or wire mesh having a minimum area of 0.12 square inches per foot, shall be used with the minimum required rebar shown in the ALTERNATIVE PRECAST BASE SECTION. Wire mesh shall not be placed in the knockouts.
2. The knockout shall not be greater than 26". In any direction. Knockouts shall have a wall thickness of 2" minimum to 2.5" maximum. Provide a 1.5" minimum gap between the knockout wall and the outside of the pipe. After the pipe is installed, fill the gap with joint mortar in accordance with WSDOT Standard Specification 9-04.3.
3. The maximum depth from the finished grade to the lowest pipe invert shall be 5'.
4. The frame and grate may be installed with the flange down or integrally cast into the adjustment section with flange up.
5. The Precast Base Section may have a rounded floor, and the walls may be sloped at a rate of 1:24 or steeper.
6. The opening shall be measured at the top of the Precast Base Section.
7. All pickup holes shall be grouted full after the basin has been placed.

NOVEMBER 23, 2016

CITY OF FERNDALE WASHINGTON
APPROVED
Public Works Director — 8/11/17 Date

CATCH BASIN TYPE 1L
STANDARD DETAIL ST-2
NOT TO SCALE

(B) CATCH BASIN TYPE 1L
nts

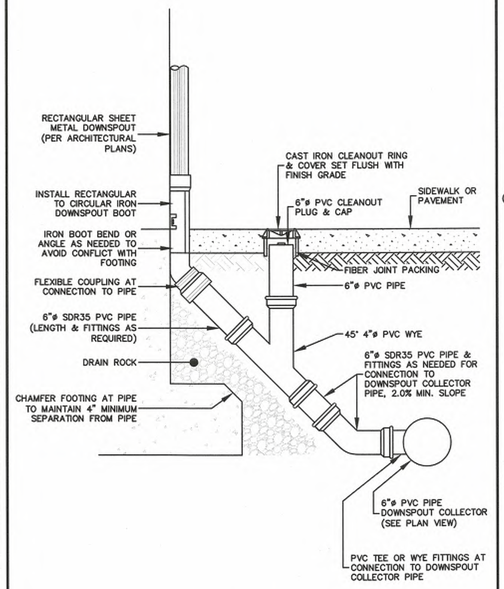

(C) DOWNSPOUT CLEANOUT IN PAVEMENT
nts

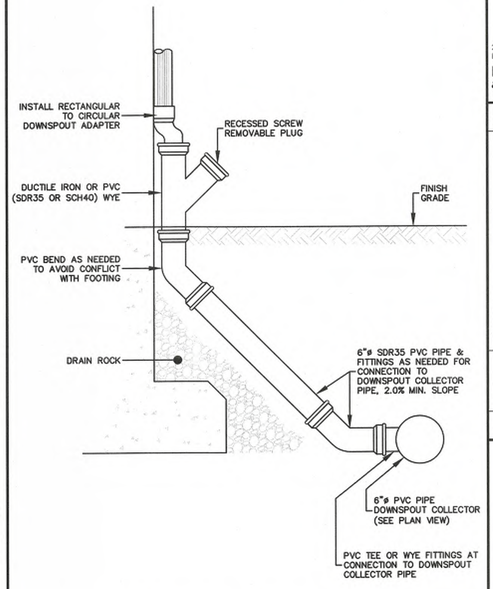

(D) DOWNSPOUT CLEANOUT IN LANDSCAPING
nts

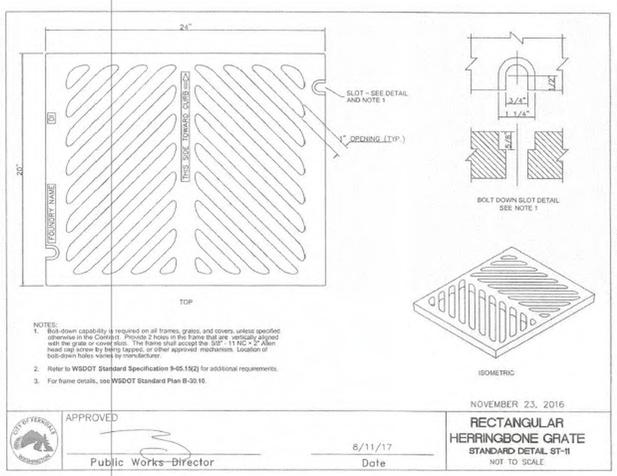

NOTES:
1. Bolt-down capability is required on all frames, grates, and covers, unless specified otherwise in the Contract. Provide 2 holes in the frame that are vertically aligned with the grate or cover slots. The frame shall accept the 5/8" - 11 NC x 2" Allen head cap screw by being tapped, or other approved mechanism. Location of bolt-down holes varies by manufacturer.
2. Refer to WSDOT Standard Specification 9-05.15(2) for additional requirements.
3. For frame details, see WSDOT Standard Plan B-30.10.

NOVEMBER 23, 2016

CITY OF FERNDALE WASHINGTON
APPROVED
Public Works Director — 8/11/17 Date

RECTANGULAR HERRINGBONE GRATE
STANDARD DETAIL ST-11
NOT TO SCALE

(E) RECTANGULAR HERRINGBONE GRATE
nts

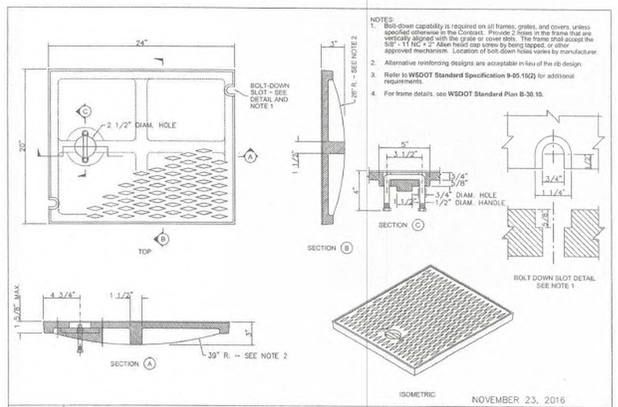

NOTES:
1. Bolt-down capability is required on all frames, grates, and covers, unless specified otherwise in the Contract. Provide 2 holes in the frame that are vertically aligned with the grate or cover slots. The frame shall accept the 5/8" - 11 NC x 2" Allen head cap screw by being tapped, or other approved mechanism.
2. Alternative reinforcing designs are acceptable in lieu of the rib design.
3. Refer to WSDOT Standard Specification 9-05.15(2) for additional requirements.
4. For frame details, see WSDOT Standard Plan B-30.10.

NOVEMBER 23, 2016

CITY OF FERNDALE WASHINGTON
APPROVED
Public Works Director — 8/11/17 Date

RECTANGULAR SOLID METAL COVER
STANDARD DETAIL ST-9
NOT TO SCALE

(F) RECTANGULAR HERRINGBONE GRATE
nts

BEDDING SPECIFICATIONS FOR PVC PIPE

THE FOLLOWING SUPPLEMENTAL SPECIFICATIONS ARE TO BE USED IN CONJUNCTION WITH THE WSDOT STANDARD SPECIFICATIONS FOR ROAD, BRIDGE AND MUNICIPAL CONSTRUCTION, CURRENT EDITION:

BEDDING FOR SEWERS, DRAINS AND CULVERTS FOR PVC PIPE–

BEDDING MATERIAL FOR PVC PIPE SHALL BE PEA GRAVEL CONFORMING TO THE FOLLOWING SPECIFICATIONS:

PEA GRAVEL – PEA GRAVEL BEDDING SHALL BE A CLEAN MIXTURE FREE FROM ORGANIC MATTER AND CONFORMING TO THE FOLLOWING GRADATION WHEN TESTED IN ACCORDANCE WITH ASTM D422:

U.S. STANDARD SIEVE SIZE	PERCENTAGE PASSING, BY WT.
3/4"	100
3/8"	95–100
#8	0–10
#200	0–3

BACKFILL – WHENEVER A TRENCH IS EXCAVATED IN THE EXISTING OR PROPOSED ROADWAY, SIDEWALK OR OTHER AREAS WHERE SETTLEMENT WOULD BE DETRIMENTAL, THE ENTIRE TRENCH ABOVE THE PIPE ZONE SHALL BE BACKFILLED WITH BANK RUN GRAVEL BACKFILL TO 95% OF MAXIMUM DENSITY.

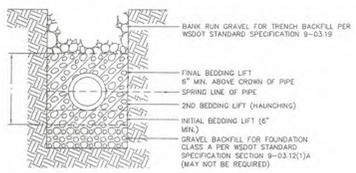

NOVEMBER 23, 2016

CITY OF FERNDALE WASHINGTON
APPROVED
Public Works Director — 8/11/17 Date

PVC PIPE ZONE BEDDING
STANDARD DETAIL ST-15
NOT TO SCALE

(G) PVC PIPE BEDDING SPECIFICATIONS
nts

APPROVED
AUG 31 2021
BY CITY OF FERNDALE
PUBLIC WORKS DEPARTMENT

AS-BUILT DRAWING
AS-BUILT NOTE:
ONLY INFORMATION NOTED AS AS-BUILT "(AB)" HAS BEEN PROVIDED BY PROJECT SURVEYOR. DATE OF POINT FILES 10/1/2019, 10/18/2019, 10/23/2020, 07/12/2021. CONTRACTOR PROVIDED ADDITIONAL MEASURE DOWNS 10/21/2019.

220 West Champion Street, Suite 200 t: 360.650.1408
Bellingham, WA 98225 f: 360.650.1401
FREELAND & ASSOCIATES

REV:	DATE:	DESCRIPTION:	BY:

CLIENT: PIONEER POST FRAME
6208 PORTAL WAY
FERNDALE, WASHINGTON

CALL BEFORE YOU DIG
FOR BURIED UTILITY LOCATIONS
1-800-424-5555

PROJECT LOCATION: PIONEER FLEXSPACE, LLC
6407 PORTAL WAY,
FERNDALE, WASHINGTON

DRAWING #: 18084SP26 (PH5).DWG
DRAWN BY: CJL
DESIGNED BY: HAF
CHECKED BY: HAF

SHEET CONTENTS: DRAINAGE DETAILS

RADILL A. FREELAND III
STATE OF WASHINGTON
28519
REGISTERED PROFESSIONAL ENGINEER

JOB #:	DATE:
18084	8-30-2021
SCALE: HORIZ: N/A VERT: N/A	SHEET: C18

00716.018 08/31/2021 RH

BEDDING SPECIFICATIONS FOR PVC PIPE

THE FOLLOWING SUPPLEMENTAL SPECIFICATIONS ARE TO BE USED IN CONJUNCTION WITH THE WSDOT STANDARD SPECIFICATIONS FOR ROAD, BRIDGE AND MUNICIPAL CONSTRUCTION, CURRENT EDITION:

BEDDING FOR SEWERS, DRAINS AND CULVERTS FOR PVC PIPE–

BEDDING MATERIAL FOR PVC PIPE SHALL BE PEA GRAVEL CONFORMING TO THE FOLLOWING SPECIFICATIONS:

PEA GRAVEL – PEA GRAVEL BEDDING SHALL BE A CLEAN MIXTURE FREE FROM ORGANIC MATTER AND CONFORMING TO THE FOLLOWING GRADATION WHEN TESTED IN ACCORDANCE WITH ASTM D422:

U.S. STANDARD SIEVE SIZE	PERCENTAGE PASSING, BY WT.
3/4"	100
3/8"	95–100
#8	0–10
#200	0–3

BACKFILL – WHENEVER A TRENCH IS EXCAVATED IN THE EXISTING OR PROPOSED ROADWAY, SIDEWALK OR OTHER AREAS WHERE SETTLEMENT WOULD BE DETRIMENTAL, THE ENTIRE TRENCH ABOVE THE PIPE ZONE SHALL BE BACKFILLED WITH BANK RUN GRAVEL BACKFILL TO 95% OF MAXIMUM DENSITY.

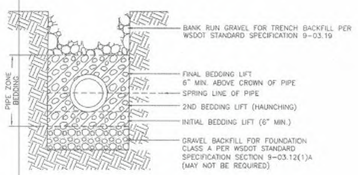

NOVEMBER 23, 2016

APPROVED — Public Works Director — 8/11/17 Date

PVC PIPE ZONE BEDDING
STANDARD DETAIL SS-1
NOT TO SCALE

(A) PIPE BEDDING FOR SANITARY SEWERS
nts

NOTES

1. PVC PIPE AND FITTINGS SHALL MEET THE REQUIREMENTS OF ASTM 3034, SDR35.

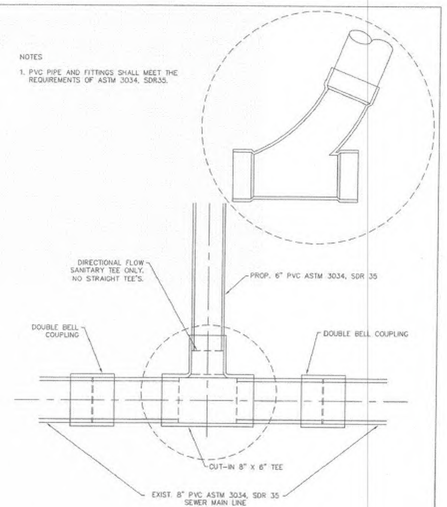

APRIL 18, 2017

APPROVED — Public Works Director — 8/11/17 Date

PROPOSED SEWER SERVICE PVC CUT-IN TEE
STANDARD DETAIL SS-17
NOT TO SCALE

(B) PROPOSED SEWER SERVICE PVC CUT-IN TEE
nts

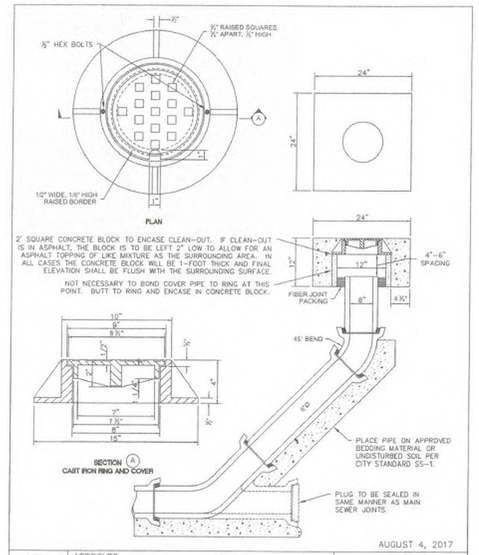

AUGUST 4, 2017

APPROVED — Public Works Director — 8/11/17 Date

SANITARY SEWER 8" CLEAN OUT
STANDARD DETAIL SS-5
NOT TO SCALE

(D) SANITARY SEWER CLEAN OUT
nts

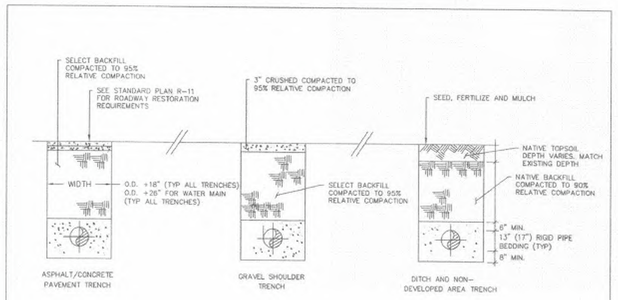

NOVEMBER 23, 2016

APPROVED — Public Works Director — 8/11/17 Date

TRENCHING DETAIL
STANDARD DETAIL SS-16
NOT TO SCALE

(E) TRENCHING DETAIL
nts

MARKER NOTE:

1. PROPOSED SIDE SEWER SERVICES SHALL EACH BE MARKED WITH A WHITE 2" DIAMETER SCHEDULE 40 PVC PIPE WITH THE TOP PAINTED GREEN, STENCILED WITH WORD "SEWER" IN BLACK TEXT AND DEPTH NOTED ON THE MARKER TO THE SERVICE INVERT.

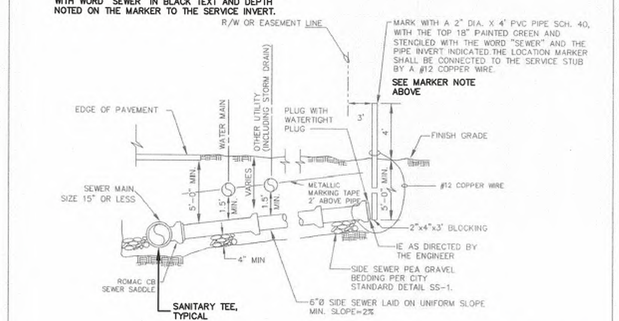

NOVEMBER 25, 2016

APPROVED — Public Works Director — 8/11/17 Date

SANITARY SEWER SERVICE CONNECTION 15" OR LESS
STANDARD DETAIL SS-6
NOT TO SCALE

(F) SIDE SEWER SERVICE
nts

APPROVED
AUG 31 2021
CITY OF FERNDALE
PUBLIC WORKS DEPARTMENT

AS-BUILT DRAWING

AS-BUILT NOTE:
ONLY INFORMATION NOTED AS AS-BUILT "(AB)" HAS BEEN PROVIDED BY PROJECT SURVEYOR. DATE OF POINT FILES 10/1/2019, 10/18/2019, 10/23/2020, 07/12/2021. CONTRACTOR PROVIDED ADDITIONAL MEASURE DOWNS 10/21/2019.

220 West Champion Street, Suite 200 t: 360.650.1408
Bellingham, WA 98225 f: 360.650.1401
FREELAND & ASSOCIATES

REV:	DATE:	DESCRIPTION:	BY:

CLIENT: PIONEER POST FRAME
6208 PORTAL WAY
FERNDALE, WASHINGTON

CALL BEFORE YOU DIG
FOR BURIED UTILITY LOCATIONS
1-800-424-5555

PROJECT LOCATION: PIONEER FLEXSPACE, LLC
6407 PORTAL WAY,
FERNDALE, WASHINGTON

DRAWING #: 18084SP26 (PH5).DWG
DRAWN BY: CJL
DESIGNED BY: HAF
CHECKED BY: HAF

SHEET CONTENTS: SANITARY SEWER DETAILS

HAROLD A. FREELAND III, STATE OF WASHINGTON, 28519, REGISTERED PROFESSIONAL ENGINEER

JOB #: 18084
DATE: 8-30-2021
SCALE: HORIZ: N/A VERT: N/A
SHEET: C19

00716.019 08/31/2021 RH

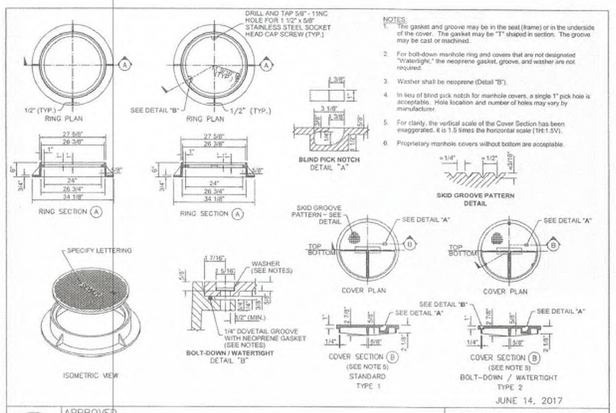

NOTES:
1. The gasket and groove may be in the seat (frame) or in the underside of the cover. The gasket may be "T" shaped in section. The groove may be cast or machined.
2. For bolt-down manhole ring and covers that are not designated "Watertight," the neoprene gasket, groove, and washer are not required.
3. Washer shall be neoprene (Detail "B").
4. In lieu of blind pick notch for manhole covers, a single 1" pick hole is acceptable. Hole location and number of holes may vary by manufacturer.
5. For clarity, the vertical scale of the Cover Section has been exaggerated. It is 1.5 times the horizontal scale (1H:1.5V).
6. Proprietary manhole covers without bottom are acceptable.

JUNE 14, 2017

APPROVED — Public Works Director — 8/11/17 Date

CIRCULAR FRAME AND COVER
STANDARD DETAIL SS-10
NOT TO SCALE

(A) CIRCULAR FRAME AND COVER
nts

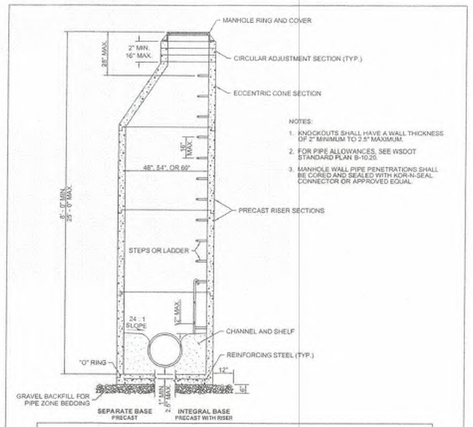

MANHOLE DIMENSION TABLE

DIAM.	MIN. WALL THICKNESS	MIN. BASE THICKNESS	MAXIMUM KNOCKOUT SIZE	MINIMUM DISTANCE BETWEEN KNOCKOUTS	BASE REINFORCING STEEL SQ IN/FT EACH DIRECTION	
					INTEGRAL BASE	SEPARATE BASE
48"	4"	6"	36"	8"	0.15	0.23
54"	4.5"	8"	42"	8"	0.19	0.19
60"	5"	8"	48"	8"	0.25	0.25

AUGUST 1, 2017

APPROVED — Public Works Director — 8/11/17 Date

SANITARY SEWER MANHOLE TYPE 1
STANDARD DETAIL SS-3
NOT TO SCALE

(B) MANHOLE TYPE 1
nts

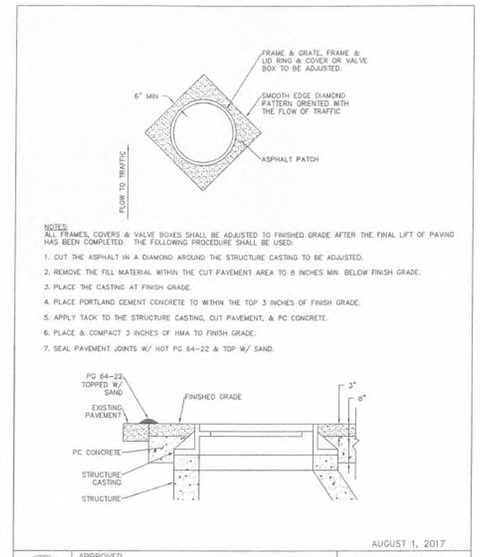

NOTES:
ALL FRAMES, COVERS & VALVE BOXES SHALL BE ADJUSTED TO FINISHED GRADE AFTER THE FINAL LIFT OF PAVING HAS BEEN COMPLETED. THE FOLLOWING PROCEDURE SHALL BE USED:
1. CUT THE ASPHALT IN A DIAMOND AROUND THE STRUCTURE CASTING TO BE ADJUSTED.
2. REMOVE THE FILL MATERIAL WITHIN THE CUT PAVEMENT AREA TO 8 INCHES MIN. BELOW FINISH GRADE.
3. PLACE THE CASTING AT FINISH GRADE.
4. PLACE PORTLAND CEMENT CONCRETE TO WITHIN THE TOP 3 INCHES OF FINISH GRADE.
5. APPLY TACK TO THE STRUCTURE CASTING, CUT PAVEMENT, & PC CONCRETE.
6. PLACE & COMPACT 3 INCHES OF HMA TO FINISH GRADE.
7. SEAL PAVEMENT JOINTS W/ HOT PG 64-22 & TOP W/ SAND.

AUGUST 1, 2017

APPROVED — Public Works Director — 8/11/17 Date

ADJUSTING CASINGS TO FINISHED GRADE
STANDARD DETAIL SS-19
NOT TO SCALE

(C) ADJUSTING CASINGS TO FINISHED GRADE
nts

AS-BUILT DRAWING
AS-BUILT NOTE:
ONLY INFORMATION NOTED AS AS-BUILT "(AB)" HAS BEEN PROVIDED BY PROJECT SURVEYOR. DATE OF POINT FILES 10/1/2019, 10/18/2019, 10/23/2020, 07/12/2021. CONTRACTOR PROVIDED ADDITIONAL MEASURE DOWNS 10/21/2019.

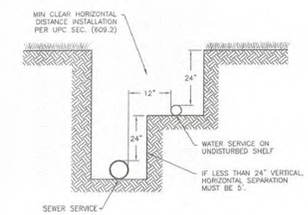

NOTE:
1. SHUT OFF REQUIRED BEFORE 1ST BRANCH OF PIPING.
2. ALL ELECTRICAL A MINIMUM OF 24" FROM WATER LINE – OR ENCLOSED IN RIGID METAL CONDUIT.

NOVEMBER 23, 2016

APPROVED — Public Works Director — 8/11/17 Date

PRIVATE SANITARY SEWER AND WATERLINE SEPARATION REQUIREMENTS
STANDARD DETAIL SS-18
NOT TO SCALE

(D) SEWER AND WATER SEPARATION
nts

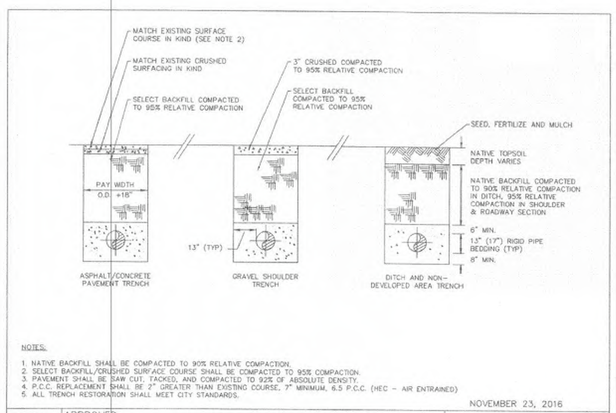

NOTES:
1. NATIVE BACKFILL SHALL BE COMPACTED TO 90% RELATIVE COMPACTION.
2. SELECT BACKFILL/CRUSHED SURFACE COURSE SHALL BE COMPACTED TO 95% COMPACTION.
3. PAVEMENT SHALL BE SAW CUT, TACKED, AND COMPACTED TO 92% OF ABSOLUTE DENSITY.
4. P.C.C. REPLACEMENT SHALL BE 2" GREATER THAN EXISTING COURSE, 7" MINIMUM, 6.5 P.C.C. (HEC – AIR ENTRAINED)
5. ALL TRENCH RESTORATION SHALL MEET CITY STANDARDS.

NOVEMBER 23, 2016

APPROVED — Public Works Director — 8/11/17 Date

WATER TRENCHING DETAIL
STANDARD DETAIL W-11
NOT TO SCALE

(E) TRENCHING DETAIL
nts

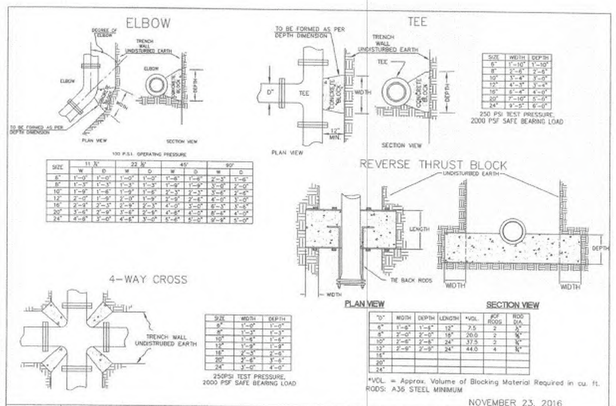

NOVEMBER 23, 2016

APPROVED — Public Works Director — 8/11/17 Date

THRUST BLOCKING DETAIL
STANDARD DETAIL W-2
NOT TO SCALE

(F) CONCRETE THRUST BLOCK
nts

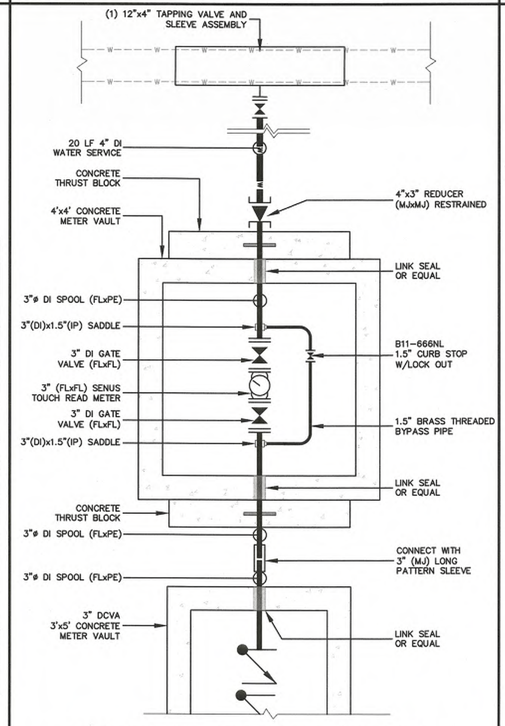

(G) 3" WATER SERVICE CONNECTION
nts

4 x 4 Meter Vault

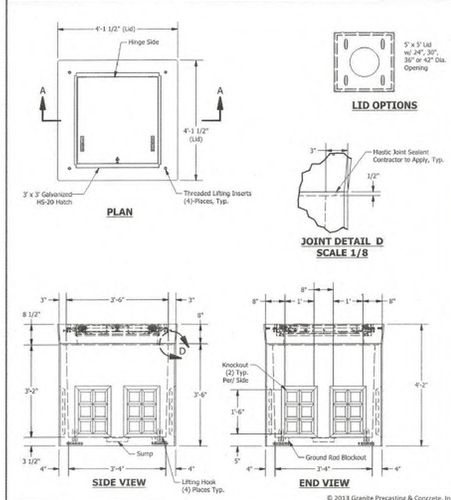

© 2013 Granite Precasting & Concrete, Inc.

SPECIFICATIONS
1. Concrete: f'c=5,000 psi @28 days
2. Rebar: ASTM A-615 Grade 60
3. Design: ASTM C-857 "Minimum Structural Design Loading for Underground Precast Concrete Utility Structures"
4. Loads: AASHTO HS-20
5. Backfill with granular free draining material (sand or pea gravel) free of stones or cobbles greater than 4" in dia.
6. Install lid prior to backfill.
7. Items shown are subject to change without notice.

APPROVED AUG 31 2021 CITY OF FERNDALE PUBLIC WORKS DEPARTMENT

(H) 3" METER CONCRETE
nts

220 West Champion Street, Suite 200 t: 360.650.1408
Bellingham, WA 98225 f: 360.650.1401
FREELAND & ASSOCIATES

REV:	DATE:	DESCRIPTION:	BY:

CLIENT: **PIONEER POST FRAME**
6208 PORTAL WAY
FERNDALE, WASHINGTON

CALL BEFORE YOU DIG FOR BURIED UTILITY LOCATIONS 1-800-424-5555

PROJECT LOCATION: **PIONEER FLEXSPACE, LLC**
6407 PORTAL WAY,
FERNDALE, WASHINGTON

DRAWING #: 18084-SP26 (PH5).DWG
DRAWN BY: CJL
DESIGNED BY: HAF
CHECKED BY: HAF

SHEET CONTENTS: **SANITARY SEWER AND WATER DETAILS**

HARRILL A. FREELAND III — STATE OF WASHINGTON — 28519 — REGISTERED PROFESSIONAL ENGINEER

JOB #: 18084
DATE: 8-30-2021
SCALE: HORIZ: N/A VERT: N/A
SHEET: C20

00716.020 08/31/2021 RH

NOTES:
1. ALL WORK SHALL CONFORM TO NFPA 24 AND THE INTERNATIONAL FIRE CODE.
2. BACKFLOW PREVENTOR, PIV, AND FDC CHECK VALVE SHALL BE LOCATED OUTSIDE OF THE BUILDING.
3. THE FIRE DEPARTMENT HOSE CONNECTION FOR SUPPLY SHALL BE OUTFITTED WITH A FIVE (5) INCH STORZ UNIVERSAL QUICK-CONNECT COUPLING AND BLIND CAP.
4. INSTALLER MUST BE A LEVEL "U" CERTIFICATE HOLDER.
5. IN THE UNCOVERED DITCH, THE COMPLETED UNDERGROUND FIRE LINE SHALL BE HYDROSTATICALLY TESTED TO 200 PSI FOR 2 HOURS, AND COMPLETELY FLUSHED IN THE PRESENCE OF A FIRE DEPARTMENT INSPECTOR.
6. A TAMPER SECURITY SWITCH SHALL BE INSTALLED ON THE POST INDICATOR VALVE.
7. CONTACT ENGINEER OF RECORD IF FIELD CONDITIONS DO NOT MATCH CONDITIONS SHOWN ON THE DETAIL.
8. ALL BOLTS AND MILD STEEL COMPONENTS SHALL BE COATED WITH BITUMINOUS COATING, OR SPRAYED WITH GALVANIZED PAINT.
9. VALVE TO BE LOCATED IN RISER ROOM TO ISLOATE THE FIRE LINE.

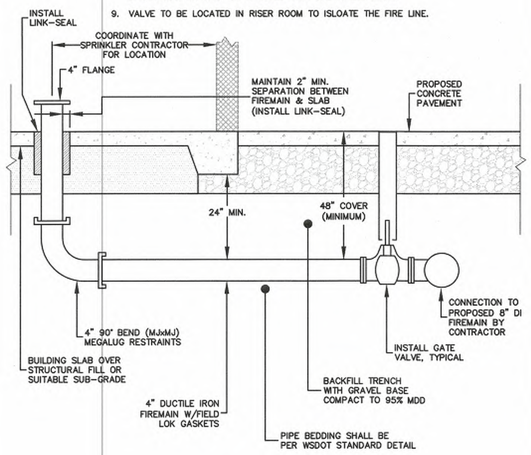

A FIRE LINE TO BUILDING - PRIVATE
nts

NOTES:
1. ALL WORK SHALL CONFORM TO NFPA 24 AND THE INTERNATIONAL FIRE CODE.
2. BACKFLOW PREVENTOR, PIV, AND FDC CHECK VALVE SHALL BE LOCATED OUTSIDE OF THE BUILDING.
3. THE FIRE DEPARTMENT HOSE CONNECTION FOR SUPPLY SHALL BE OUTFITTED WITH A FIVE (5) INCH STORZ UNIVERSAL QUICK-CONNECT COUPLING AND BLIND CAP.
4. INSTALLER MUST BE A LEVEL "U" CERTIFICATE HOLDER.
5. IN THE UNCOVERED DITCH, THE COMPLETED UNDERGROUND FIRE LINE SHALL BE HYDROSTATICALLY TESTED TO 200 PSI FOR 2 HOURS, AND COMPLETELY FLUSHED IN THE PRESENCE OF A FIRE DEPARTMENT INSPECTOR.
6. A TAMPER SECURITY SWITCH SHALL BE INSTALLED ON THE POST INDICATOR VALVE.
7. CONTACT ENGINEER OF RECORD IF FIELD CONDITIONS DO NOT MATCH CONDITIONS SHOWN ON THE DETAIL.
8. ALL BOLTS AND MILD STEEL COMPONENTS SHALL BE COATED WITH BITUMINOUS COATING, OR SPRAYED WITH GALVANIZED PAINT.
9. VALVE TO BE LOCATED IN RISER ROOM TO ISLOATE THE FIRE LINE.

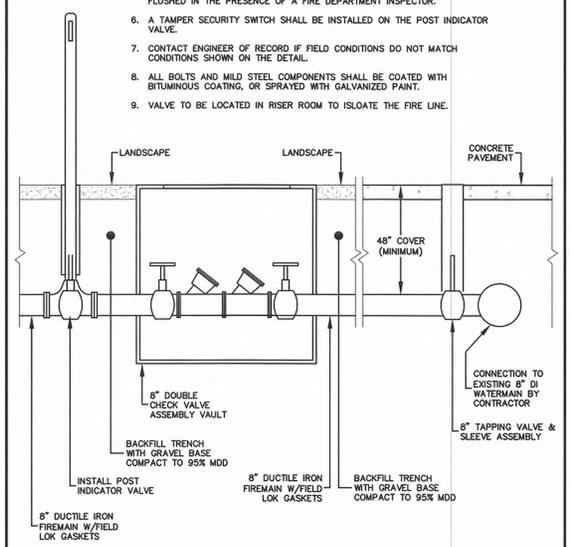

B FIRE LINE TO DCVA AND PIV - PRIVATE
nts

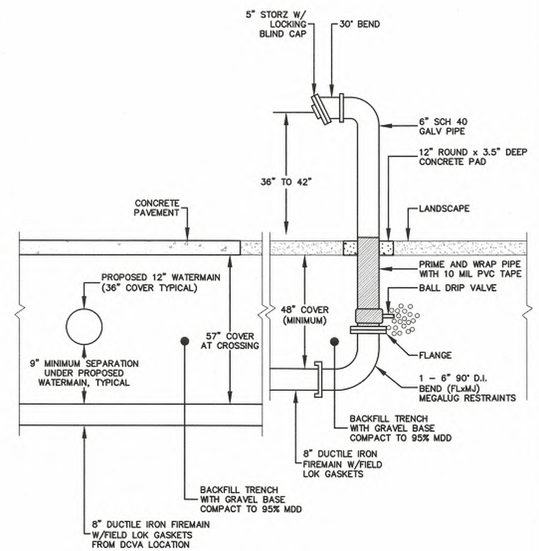

C FIRE LINE TO FDC - PRIVATE
nts

AS-BUILT DRAWING

AS-BUILT NOTE:
ONLY INFORMATION NOTED AS AS-BUILT "(AB)" HAS BEEN PROVIDED BY PROJECT SURVEYOR. DATE OF POINT FILES 10/1/2019, 10/18/2019, 10/23/2020, 07/12/2021. CONTRACTOR PROVIDED ADDITIONAL MEASURE DOWNS 10/21/2019.

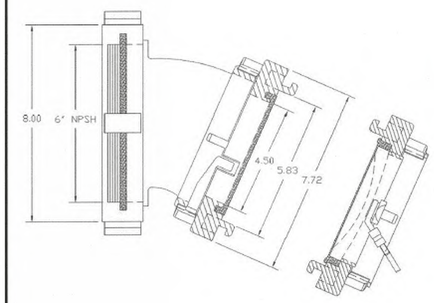

Harrington, Inc.
2630 W. 21st Street
Erie, PA 16506

DWG NO.:	H30E-50-60NPSH/CAP
DESCRIPTION:	30° ELBOW 5" STORZ X 6" NPSH FEMALE SWIVEL with STORZ CAP w/CABLE
DATE: 11/6/07	DRAWN: MFC / REV: 00
SCALE: NTS	SHEET 1 OF 1

D FDC CAP AND ELBOW
nts

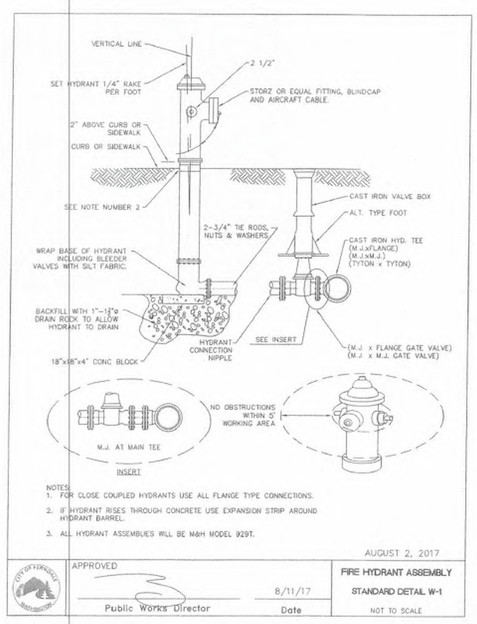

NOTES:
1. FOR CLOSE COUPLED HYDRANTS USE ALL FLANGE TYPE CONNECTIONS.
2. IF HYDRANT RISES THROUGH CONCRETE USE EXPANSION STRIP AROUND HYDRANT BARREL.
3. ALL HYDRANT ASSEMBLIES WILL BE M&H MODEL 929T.

AUGUST 2, 2017

APPROVED		FIRE HYDRANT ASSEMBLY
Public Works Director	8/11/17 Date	STANDARD DETAIL W-1
		NOT TO SCALE

E FIRE HYDRANT ASSEMBLY
nts

BOLLARD NOTES:
1. BOLLARDS SHALL BE 4" DIAMETER DUCTILE IRON POSTS SET IN 36" OF CONCRETE AT LEAST 18" IN DIAMETER. THE INSIDE OF POSTS SHALL ALSO BE FILLED WITH CONCRETE WITH SMOOTH MOUND AS TOP CAP.
2. BOLLARDS SHALL BE LOCATED 3' CLEAR FROM FIRE HYDRANT AND SHALL BE INSTALLED AT ±5' O.C. AND SHALL PROTECT FIRE HYDRANT FROM ALL FOUR SIDES.
3. BOLLARDS SHALL EXTEND ABOVE GROUND TO A MINIMUM HEIGHT OF 4'.
4. BOLLARDS SHALL BE OF SUFFICIENT NUMBER TO PROTECT THE STRUCTURE, MINIMUM OF 2.
5. PAINT BOLLARDS RUSTOLEUM YELLOW.

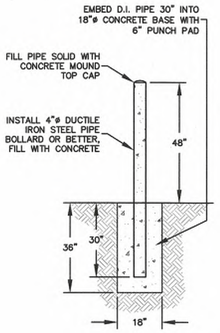

F PIPE BOLLARD
nts

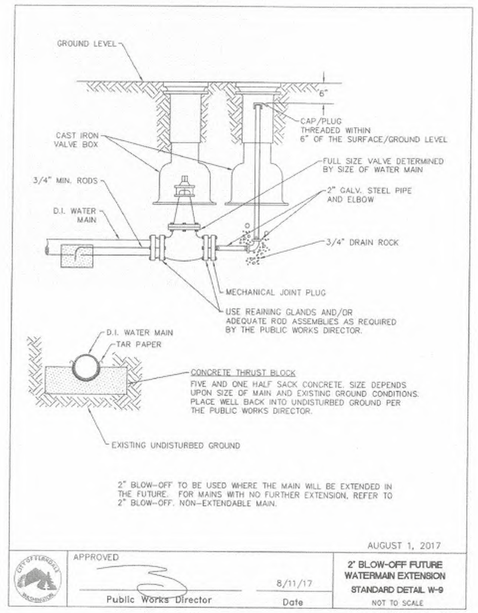

AUGUST 1, 2017

APPROVED		2" BLOW-OFF FUTURE WATERMAIN EXTENSION
Public Works Director	8/11/17 Date	STANDARD DETAIL W-9
		NOT TO SCALE

G 2" BLOW-OFF WATER MAIN EXTENSION
nts

NOTE:
1. CONTRACTOR TO VERIFY 3'x5' BOX NOTED ON PLAN SHEET C14 WILL WORK. UPSIZE AS NECESSARY TO 5'x5.4' CONCRETE VAULT AS AVAILABLE AT GRANITE PRECAST OR EQUAL.

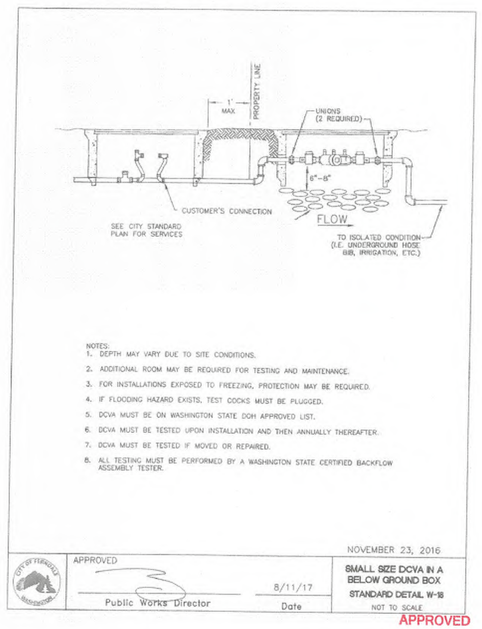

NOTES:
1. DEPTH MAY VARY DUE TO SITE CONDITIONS.
2. ADDITIONAL ROOM MAY BE REQUIRED FOR TESTING AND MAINTENANCE.
3. FOR INSTALLATIONS EXPOSED TO FREEZING, PROTECTION MAY BE REQUIRED.
4. IF FLOODING HAZARD EXISTS, TEST COCKS MUST BE PLUGGED.
5. DCVA MUST BE ON WASHINGTON STATE DOH APPROVED LIST.
6. DCVA MUST BE TESTED UPON INSTALLATION AND THEN ANNUALLY THEREAFTER.
7. DCVA MUST BE TESTED IF MOVED OR REPAIRED.
8. ALL TESTING MUST BE PERFORMED BY A WASHINGTON STATE CERTIFIED BACKFLOW ASSEMBLY TESTER.

NOVEMBER 23, 2016

APPROVED		SMALL SIZE DCVA IN A BELOW GROUND BOX
Public Works Director	8/11/17 Date	STANDARD DETAIL W-18
		NOT TO SCALE

APPROVED
AUG 11 2021
CITY OF FERNDALE
PUBLIC WORKS DEPARTMENT

H 3" DCVA CONCRETE VAULT
nts

220 West Champion Street, Suite 200 t: 360.650.1408
Bellingham, WA 98225 f: 360.650.1401
FREELAND & ASSOCIATES

REV:	DATE:	DESCRIPTION:	BY:

CLIENT: PIONEER POST FRAME, 6208 PORTAL WAY, FERNDALE, WASHINGTON

CALL BEFORE YOU DIG FOR BURIED UTILITY LOCATIONS 1-800-424-5555

PROJECT LOCATION: PIONEER FLEXSPACE, LLC, 6407 PORTAL WAY, FERNDALE, WASHINGTON

DRAWING #: 18084SP26 (PH5).DWG
DRAWN BY: CJL
DESIGNED BY: HAF
CHECKED BY: HAF

SHEET CONTENTS: WATER DETAILS

HAROLD A. FREELAND III, STATE OF WASHINGTON, 28510, REGISTERED PROFESSIONAL ENGINEER

JOB #: 18084
DATE: 8-30-2021
SCALE: HORIZ: N/A VERT: N/A
SHEET: C21

00716.021 08/31/2021 RH

866.DIP.PIPE 4"–24"

FIELD LOK 350® GASKET

2012 EDITION | P 3

FIELD LOK 350® Gasket

Restrained joint pipe and fittings are used in pressurized Ductile Iron pipelines to prevent the joints of the line from separating due to thrust forces. Thrust forces generally occur at changes of direction in the line. Usually, a calculated length of pipeline extending from the location of the thrust force is restrained in the joints so that this force can be transmitted to the soil surrounding the line. The entire pipeline is often restrained for installations in poor soil or for critical lines.

U.S. Pipe's FIELD LOK 350 Gasket has proven to be an extremely successful, trouble-free means of joint restraint for well over one million Ductile Iron pipe and fitting joint assemblies across North America. By simply inserting a FIELD LOK 350 Gasket into the socket of a TYTON JOINT® Pipe, Fitting or Valve, restraint is instantly achieved when the joint is assembled. Stainless steel locking segments vulcanized into the FIELD LOK 350 Gasket grip the pipe to prevent joint separation.

FIELD LOK 350 Gaskets, utilizing patented improvements, are rated by U.S. Pipe for operating pressures up to 350 psi — a rating that now matches that of Pressure Class 350 pipe — giving the engineer and user new flexibility in designing piping systems.

Underwriters Laboratories lists the 4"–24" sizes for 350 psi. Factory Mutual, utilizing a safety factor of 4, approves the 4"–16" sizes for 250 psi and the 18"–24" sizes for 200 psi service.

With the use of the FIELD LOK 350 Gasket, push-on joint Ductile Iron TYTON JOINT Pipe or Fittings can be quickly and securely restrained as the joint is assembled. The restraint provided shall be a boltless, integral restraining system and shall be rated for 350 psi in accordance with the performance requirements of ANSI/AWWA C111/A21.11. Field cut pipe are no longer a problem to restrain. No pipe surface preparation* or grooving is required for field cut pipe other than the cut end needing to be beveled as required for any push-on joint spigot end. With the FIELD LOK 350 Gasket in place, the joints are restrained without thrust blocks, bolts, grooves, rods, clamps or retainer glands, resulting in savings of labor, material and time.

CAUTION: *U.S. Pipe does not recommend FIELD LOK 350 Gaskets for use above ground. The long-term effect of cyclical movements can be gradual joint separation to the point that the seal on the gasket bulb is compromised. Sources of cyclical movements include vibration as may be found on bridge crossings, and thermal expansion and contraction resulting from atmospheric temperature changes. These conditions are not experienced with buried pipe lines.*

**See note on page 5 regarding pipe with thick coatings or tape wrap.*

FIELD LOK®, FIELD LOK 350®, TYTON®, TYTON JOINT® and TR FLEX® are Registered Trademarks of U.S. Pipe and Foundry Company.

ANSI/AWWA Standards

ANSI/AWWA C111/A21.11 Standard for Rubber-Gasket Joints for Ductile Iron Pressure Pipe and Fittings.

FIELD LOK 350 Gaskets are available in 4"–24" sizes and the pressure rating is based on the performance requirements of ANSI/AWWA C111/A21.11.

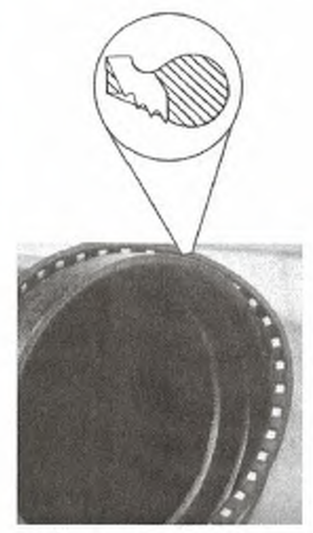

NOTE: *If specifiers and users believe that corrosive soils will be encountered where products are to be installed, please refer to ANSI/AWWA C105/A21.5* **Polyethylene** *Encasement for Ductile Iron Pipe Systems for proper external protection procedures.*

Pressure Rating: The working pressure rating of the FIELD LOK 350 Gasket Restrained Joint System does not exceed that of the working pressure rating of the pipe in which it is installed.

U.S. PIPE AND FOUNDRY CO. **FIELD LOK 350® GASKET BRO-080** REVISED 07.12

(A) FIELD LOK 350 GASKET
nts

866.DIP.PIPE

TYTON JOINT® Pipe

2010 EDITION | P 13

Thickness Class – Thicknesses, Dimensions and Weight

SIZE Inches	THICKNESS CLASS	THICKNESS Inches	OUTSIDE DIAMETER* Inches	18-FOOT LAYING LENGTH AVG. WEIGHT LENGTH† Pounds	18-FOOT LAYING LENGTH WEIGHT PER FOOT†† Pounds	20-FOOT LAYING LENGTH AVG. WEIGHT LENGTH† Pounds	20-FOOT LAYING LENGTH WEIGHT PER FOOT†† Pounds
4	51	0.26	4.80	215	11.3	—	—
4	52	0.29	4.80	235	12.6	—	—
4	53	0.32	4.80	260	13.8	—	—
4	54	0.35	4.80	280	15.0	—	—
4	55	0.38	4.80	300	16.1	—	—
4	56	0.41	4.80	320	17.3	—	—
6	50	0.25	6.90	305	16.0	335	16.0
6	51	0.28	6.90	335	17.8	370	17.8
6	52	0.31	6.90	370	19.6	410	19.6
6	53	0.34	6.90	400	21.4	445	21.4
6	54	0.37	6.90	435	23.2	480	23.2
6	55	0.40	6.90	465	25.0	515	25.0
6	56	0.43	6.90	495	26.7	550	26.7
8	50	0.27	9.05	430	22.8	475	22.8
8	51	0.30	9.05	475	25.2	525	25.2
8	52	0.33	9.05	520	27.7	575	27.7
8	53	0.36	9.05	560	30.1	620	30.1
8	54	0.39	9.05	605	32.5	670	32.5
8	55	0.42	9.05	650	34.8	720	34.8
8	56	0.45	9.05	690	37.2	765	37.2
10	50	0.29	11.10	570	30.1	630	30.1
10	51	0.32	11.10	625	33.2	690	33.2
10	52	0.35	11.10	680	36.2	750	36.2
10	53	0.38	11.10	730	39.2	810	39.2
10	54	0.41	11.10	785	42.1	870	42.1
10	55	0.44	11.10	840	45.1	930	45.1
10	56	0.47	11.10	890	48.0	990	48.0

NOTE: *Thicknesses and dimensions of 4" through 64" Ductile Iron pipe conform to ANSI/AWWA C151/A21.51. Weights may vary from the standard because of differences in bell weights.*

**Tolerance of O.D. of spigot end: 4-12 in., ±0.06 in.; 14-24 in., +0.05 in., -0.08 in.; 30-48 in., +0.08 in., -0.06 in.; 54-64 in., +0.04 in., -0.10 in.*
† Including bell; calculated weight of pipe rounded off to nearest 5 lbs.
†† Including bell; average weight, per foot, based on calculated weight of pipe before rounding.

Table continued on next page.

U.S. PIPE AND FOUNDRY CO. **TYTON JOINT Pipe BRO-003** REVISED 6.10

(B) PIPE SPECIFICATIONS
nts

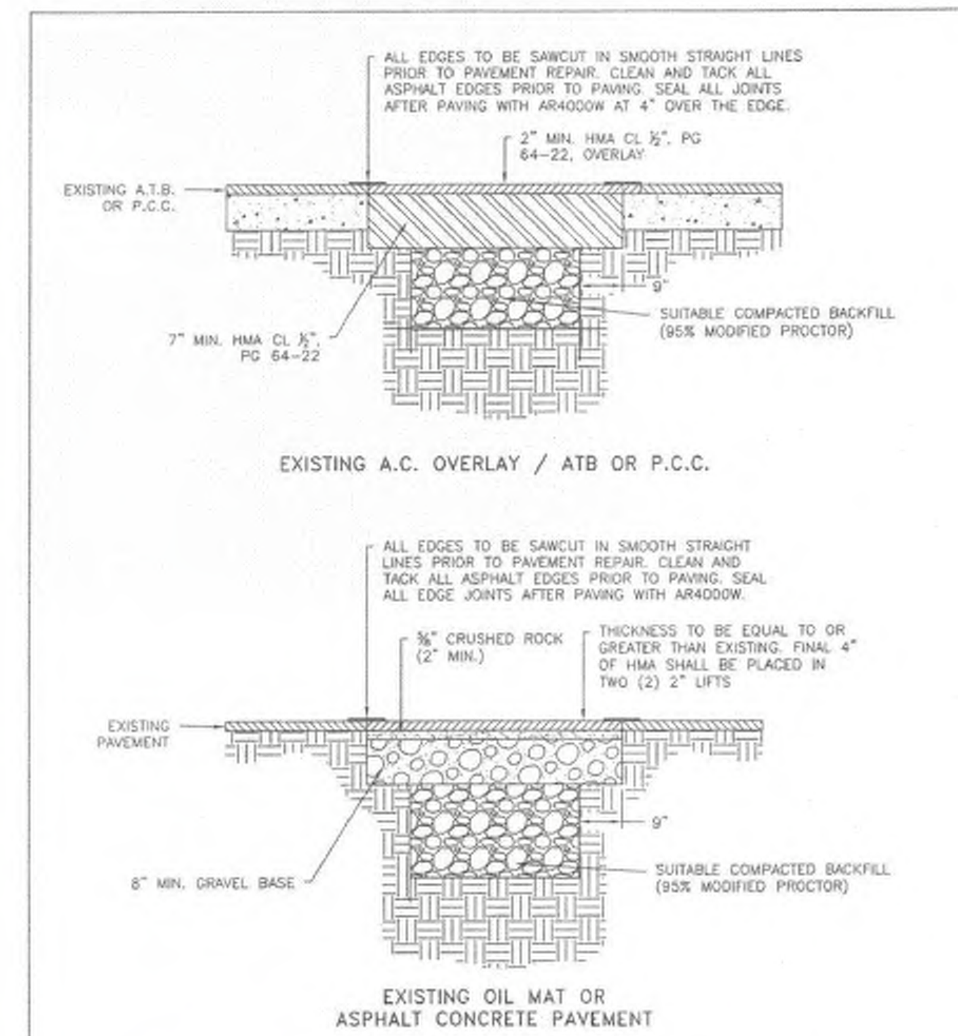

NOTES
1. THE PUBLIC WORKS DIRECTOR SHALL DETERMINE IF A PAVEMENT OVERLAY IS REQUIRED. ROAD SHOULDER AREAS SHALL BE COMPACTED TO 95% MODIFIED PROCTOR.

NOVEMBER 23, 2016

CITY OF FERNDALE WASHINGTON | APPROVED Public Works Director | 8/11/17 Date | EXISTING ROADWAY RESTORATION REPAIR STANDARD DETAIL R-11 NOT TO SCALE

(C) EXISTING ROADWAY RESTORATION REPAIR
nts

AS-BUILT DRAWING
AS-BUILT NOTE:
ONLY INFORMATION NOTED AS AS-BUILT "(AB)" HAS BEEN PROVIDED BY PROJECT SURVEYOR. DATE OF POINT FILES 10/1/2019, 10/18/2019, 10/23/2020, 07/12/2021. CONTRACTOR PROVIDED ADDITIONAL MEASURE DOWNS 10/21/2019.

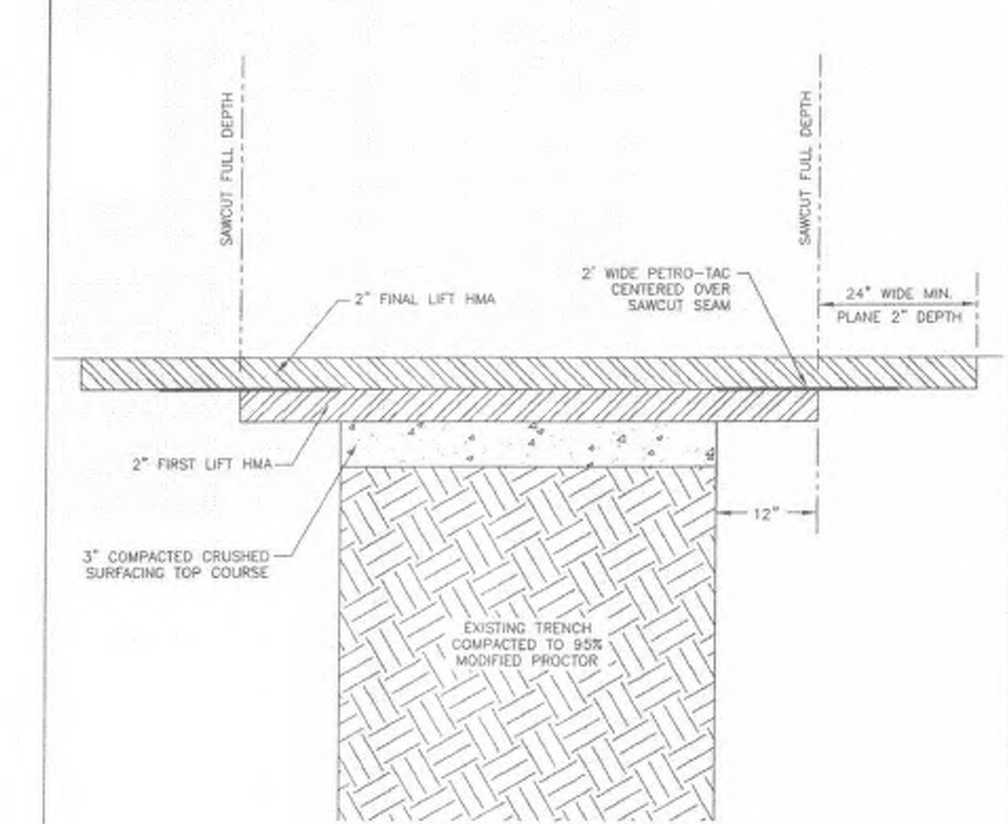

NOTE:
1. TAC REQUIRED BETWEEN PAVED SURFACES, USE CSS1 EXCEPT WHERE PETRO–TAC IS SPECIFIED.

APRIL 21, 2017

CITY OF FERNDALE WASHINGTON | APPROVED Public Works Director | 8/11/17 Date | PETRO–TAC PLACEMENT STANDARD DETAIL R-11A NOT TO SCALE

(D) PETRO-TAC PLACEMENT
nts

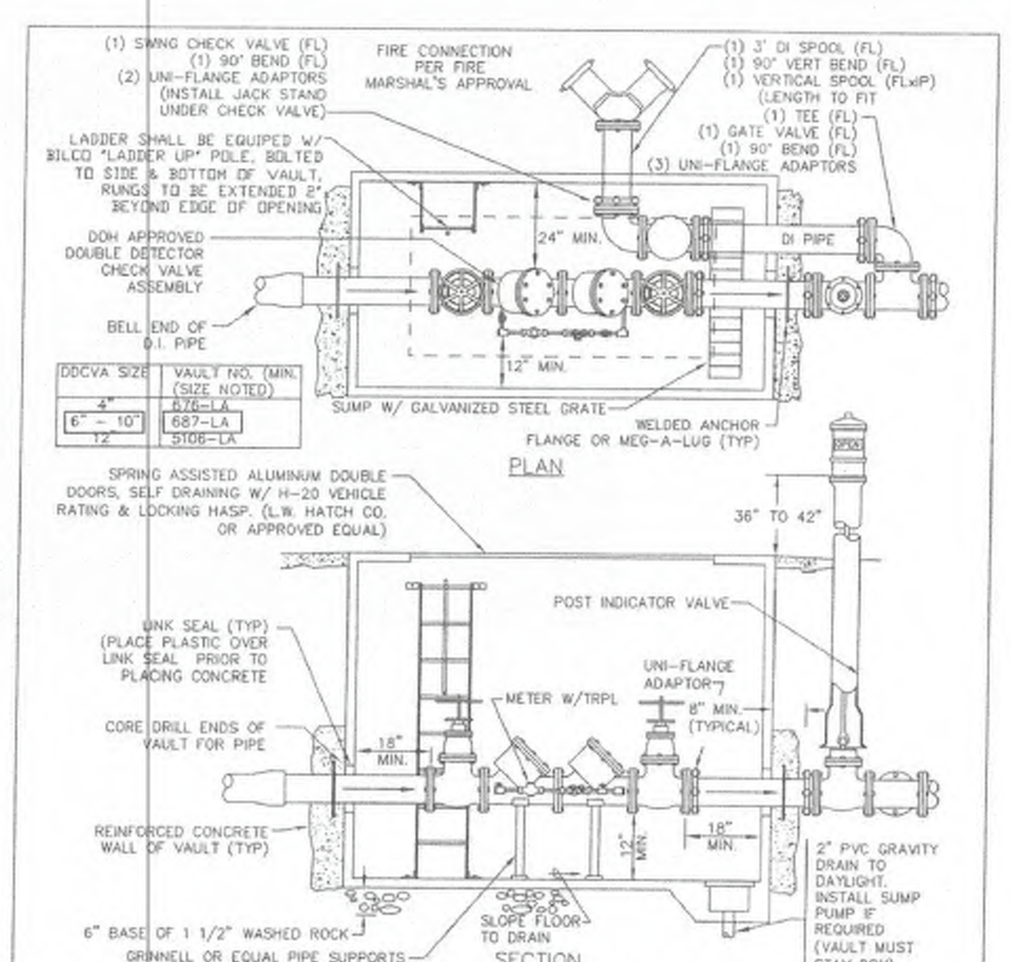

DDCVA SIZE	VAULT NO. (MIN. SIZE NOTED)
4"	676–LA
6" – 10"	687–LA
12"	5106–LA

NOTE:
1. COVER SHALL NOT EXTEND MORE THAN 2" ABOVE GRADE WHEN VAULT IS NOT IN TRAFFIC AREA.
2. SLOPE PAVEMENT AWAY FROM COVER WHEN VAULT IS IN TRAFFIC AREA.
3. VAULT SHALL BE OF ADEQUATE HEIGHT TO PROVIDE MIN. 6" CLEARANCE TO O,S&Y VALVE WHEN VALVE IS FULLY OPEN.
4. INSTALL ALARM SYSTEM AS REQUIRED BY FIRE DISTRICT.
5. 5/8" BY–PASS METER SHALL BE SENSUS TECHNOLOGIES OR APPROVED EQUAL.
6. VAULTS SHALL BE AS MANUFACTURED BY UTILITY VAULT OR EQUAL AND SHALL BE STRUCTURALLY DESIGNED FOR THE PROPOSED INSTALLATION.
7. CONTRACTOR SHALL BE RESPONSIBLE FOR SELECTING THE VAULT SIZE CONSISTENT WITH THE MINIMUM DIMENSIONS SHOWN IN THE DETAILS.

NOVEMBER 23, 2016

CITY OF FERNDALE WASHINGTON | APPROVED Public Works Director | 8/11/17 Date | DOUBLE CHECK ASSEMBLY AND VAULT W/FDC STANDARD DETAIL W-16 NOT TO SCALE

(E) DOUBLE DETECTOR CHECK & VAULT W/ FDC
nts

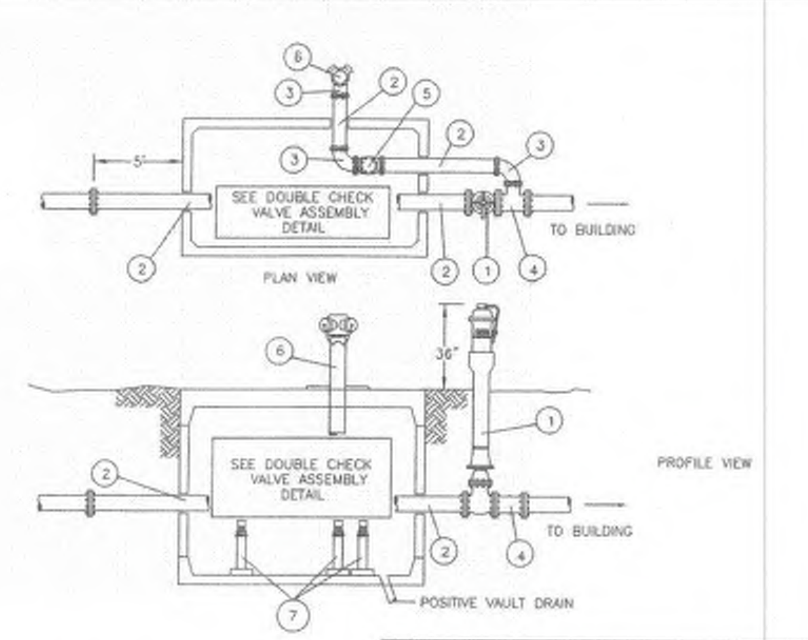

MATERIAL LIST:
1. POST INDICATOR VALVE
2. CLASS 52 DI WALL PIPE FL X FL
3. CLASS 52 DI 90° BEND FL X FL
4. CLASS 52 DI TEE FL X FL
5. SWING CHECK VALVE W/BALL DRIP ASSEMBLY
6. FIRE DEPARTMENT CONNECTION
7. VALVE STANDS
8. WHERE PIPING PASSES THROUGH CONCRETE WALL PROVIDE 2" CLEARANCE W/ WATERPROOF MASTIC OR FLEXIBLE SEALANT

GENERAL NOTES:
A. PIPE FROM VAULT TO BUILDING SHALL BE CLASS 50 DI.
B. TAMPER SWITCHES SHALL BE INSTALLED ON 1 AND 3 CONNECTED TO BUILDING FIRE ALARM SYSTEM.
C. INSTALL PLUGS ON ALL TEST COCKS. FINGER TIGHTEN.
D. ALL PIPING SHALL BE A MINIMUM OF 4" DIA. AS PER NFPA13.
E. FIRE SERVICES REQUIRE DETECTOR TYPE BACKFLOW PROTECTION ASSEMBLIES.

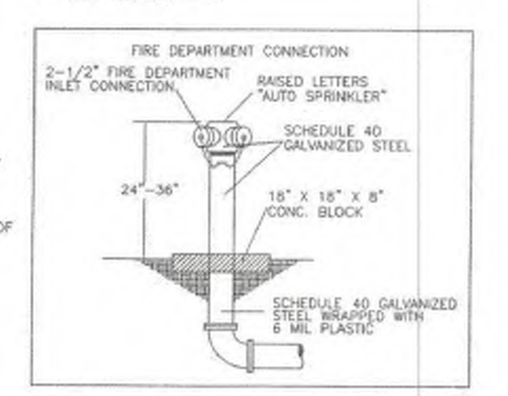

NOVEMBER 23, 2016

CITY OF FERNDALE WASHINGTON | APPROVED Public Works Director | 8/11/17 Date | DOUBLE CHECK VALVE ASSEMBLY W/FDC STANDARD DETAIL W-17 NOT TO SCALE

(F) DCVA WITH FDC
nts

6 x 8 Meter Vault

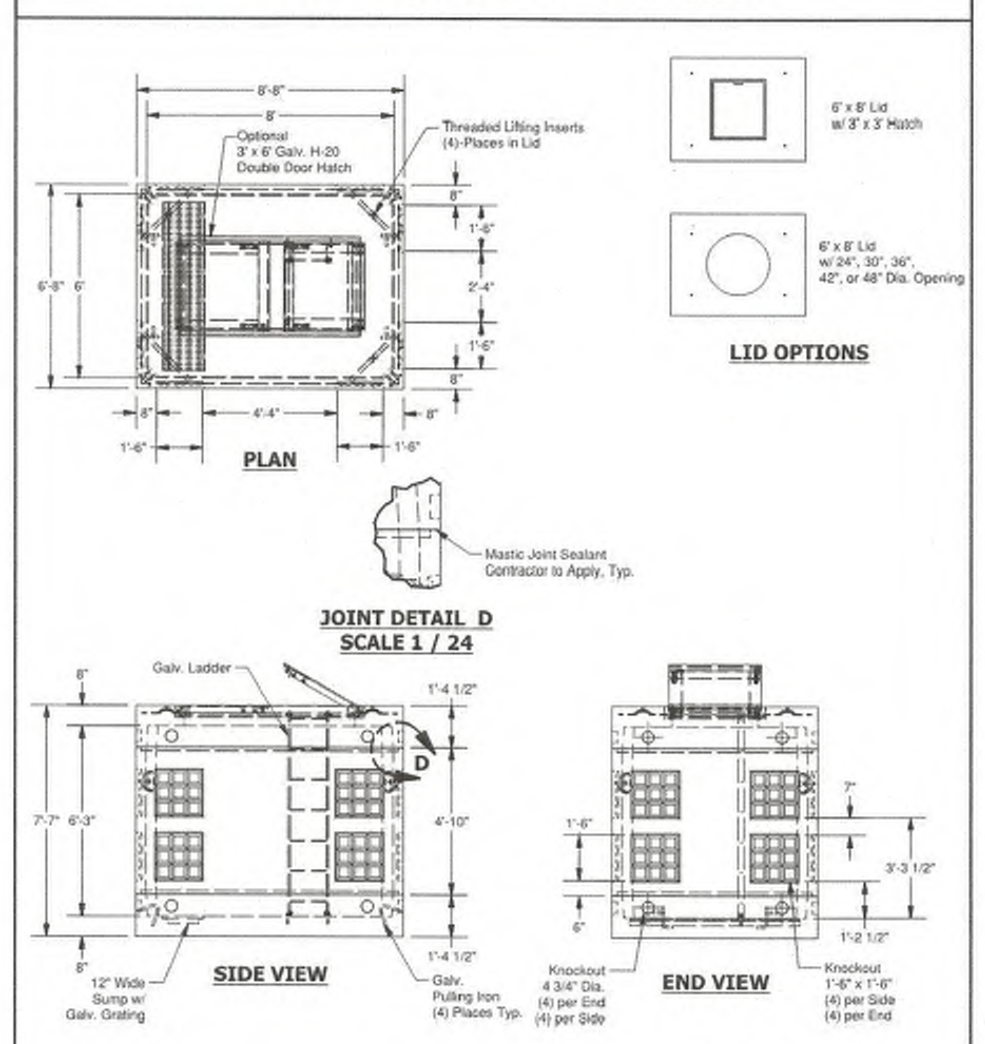

© 2013 Granite Precasting & Concrete, Inc.

SPECIFICATIONS
1. Concrete: Fc=5,000 psi @28 days
2. Rebar: ASTM A-615 Grade 60
3. Design: ASTM C-857 "Minimum Structural Design Loading for Underground Precast Concrete Utility Structures"
4. Loads: AASHTO HS-20
5. Backfill with granular free draining material (sand or pea gravel) free of stones or cobbles greater than 4" in dia.
6. Install lid prior to backfill.
7. Items shown are subject to change without notice.

(G) FIREMAIN DCVA 687-LA VAULT
nts

STAR® PIPE PRODUCTS

Municipal & Construction Castings
VALVE BOXES

950 VALVE BOX — **VB-0036**

ITEM CODE	DETAILS	APPROX WT. (LBS.)
VBST950	COMPLETE	55
VBST950L	LID	15
VBST950-10T	TOP	40

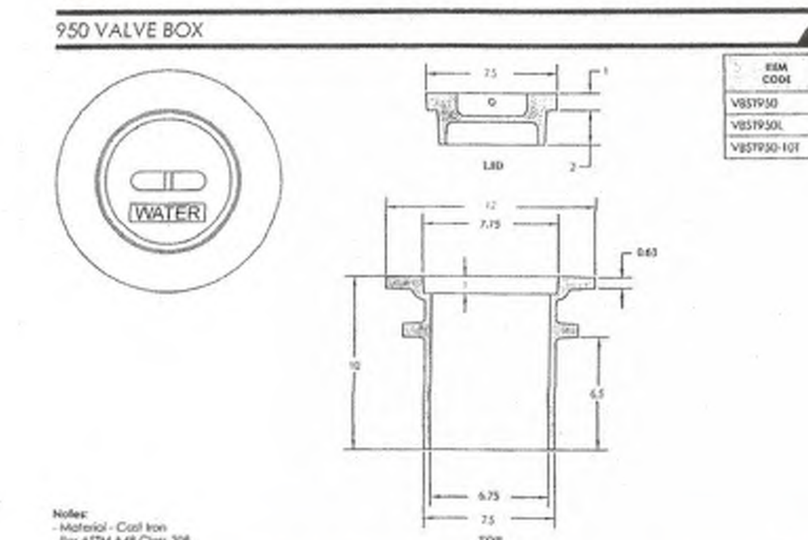

Notes:
- Material - Cast Iron For ASTM A48 Class 30B
- Dimensions in inches

DEEP WELL VALVE BOX BOTTOM — **VB-0037**

ITEM CODE	DETAILS (L)	APPROX WT. (LBS.)
VBB24DW	24	40
VBB30DW	30	45
VBB36DW	36	50
VBB42DW	42	55

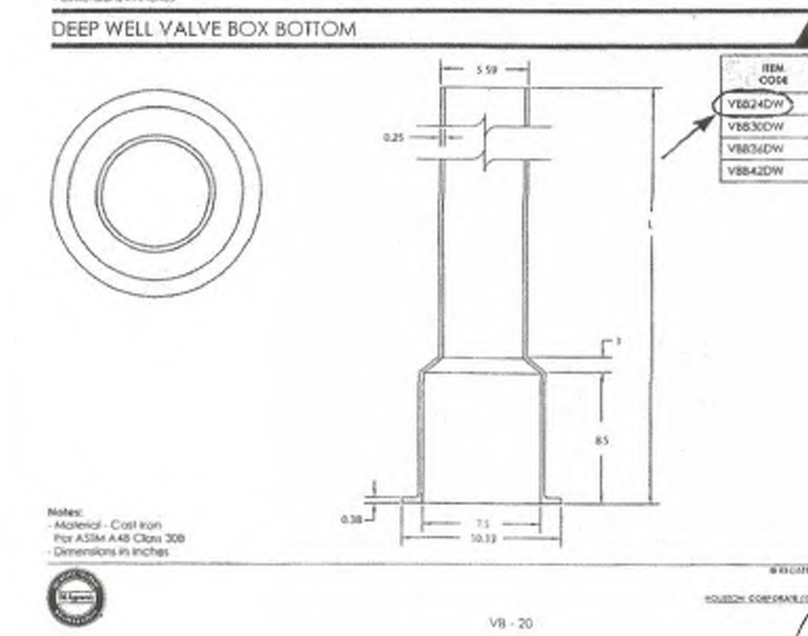

Notes:
- Material - Cast Iron For ASTM A48 Class 30B
- Dimensions in inches

VB - 20

APPROVED
AUG 31 2021
BY [signature] CITY OF FERNDALE PUBLIC WORKS DEPARTMENT

(H) VALVE BOX
nts

220 West Champion Street, Suite 200 t: 360.650.1408
Bellingham, WA 98225 f: 360.650.1401
FREELAND & ASSOCIATES

REV:	DATE:	DESCRIPTION:	BY:

CLIENT: **PIONEER POST FRAME** 6208 PORTAL WAY FERNDALE, WASHINGTON

CALL BEFORE YOU DIG FOR BURIED UTILITY LOCATIONS 1-800-424-5555

PROJECT LOCATION: **PIONEER FLEXSPACE, LLC** 6407 PORTAL WAY, FERNDALE, WASHINGTON

DRAWING #: 18084SP26 (PH5).DWG
DESIGNED BY: HAF
DRAWN BY: CJL
CHECKED BY: HAF

SHEET CONTENTS: **WATER DETAILS**

HARVILL A. FREELAND III STATE OF WASHINGTON 28519 REGISTERED PROFESSIONAL ENGINEER

JOB #: 18084 | DATE: 8-30-2021
SCALE: HORIZ: N/A VERT: N/A | SHEET: C22

00716.022 08/31/2021 RH

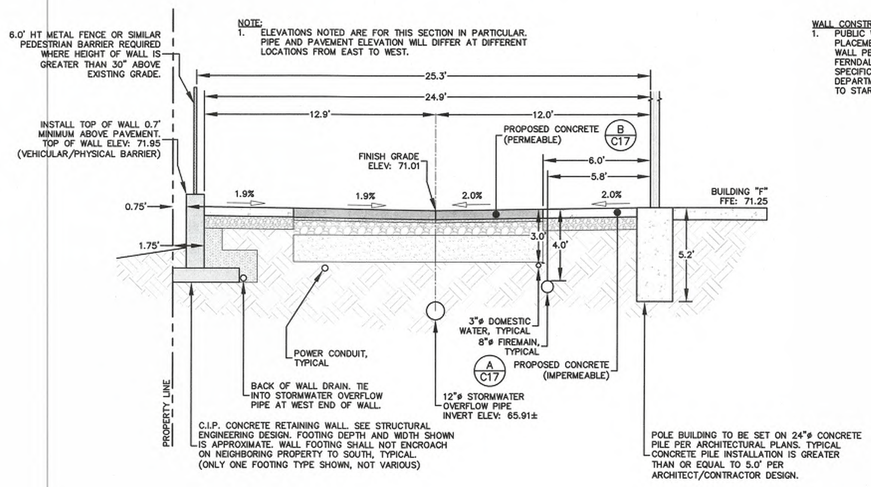

WALL CONSTRUCTION PERMIT NOTE:
1. PUBLIC WORKS CANNOT APPROVE OF RETAINING WALL PLACEMENT AND CONSTRUCTION AS PROPOSED. RETAINING WALL PERMITS MUST BE OBTAINED THROUGH THE CITY OF FERNDALE BUILDING DEPARTMENT. RETAINING WALL PLANS AND SPECIFICATIONS WILL BE SUBMITTED TO THE BUILDING DEPARTMENT FOR REVIEW AND APPROVAL SEPARATELY PRIOR TO START OF CONSTRUCTION.

(A) SITE SECTION - BUILDING "F" TO PROPERTY LINE

SCALE 1" = 4'

0 2 4 8
1 inch = 4 ft.

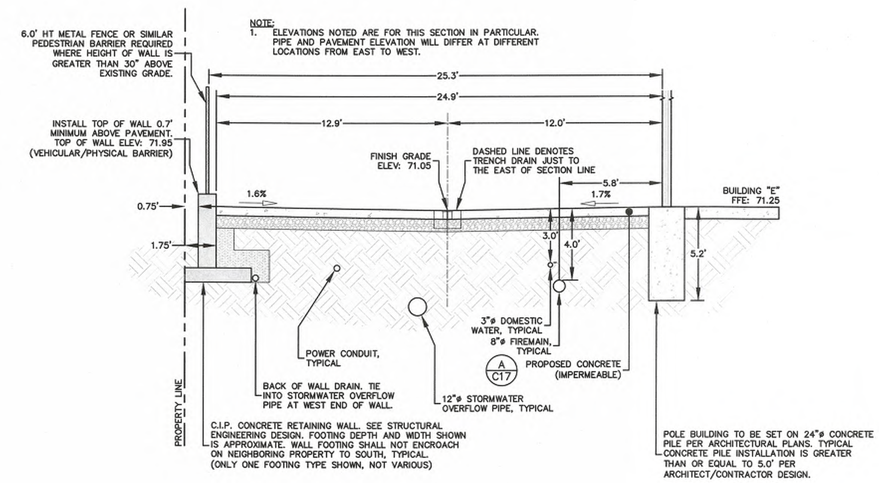

(B) SITE SECTION - BUILDING "E" TO PROPERTY LINE

SCALE 1" = 4'

0 2 4 8
1 inch = 4 ft.

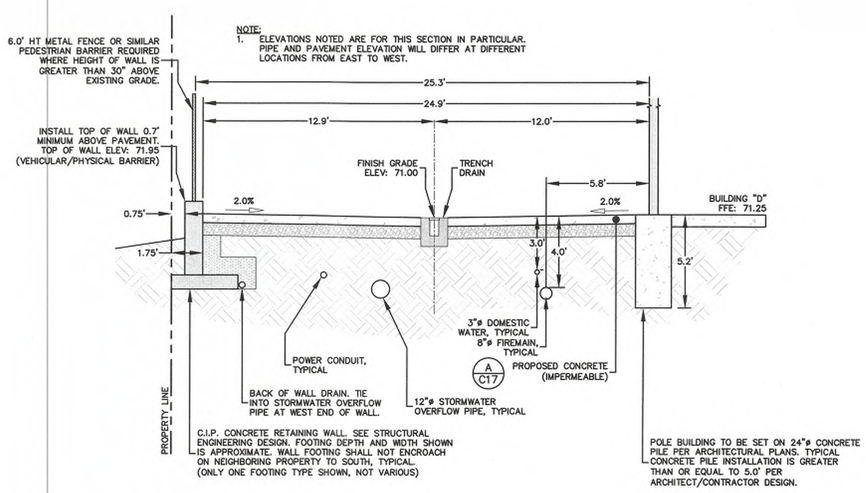

(C) SITE SECTION - BUILDING "D" TO PROPERTY LINE

SCALE 1" = 4'

0 2 4 8
1 inch = 4 ft.

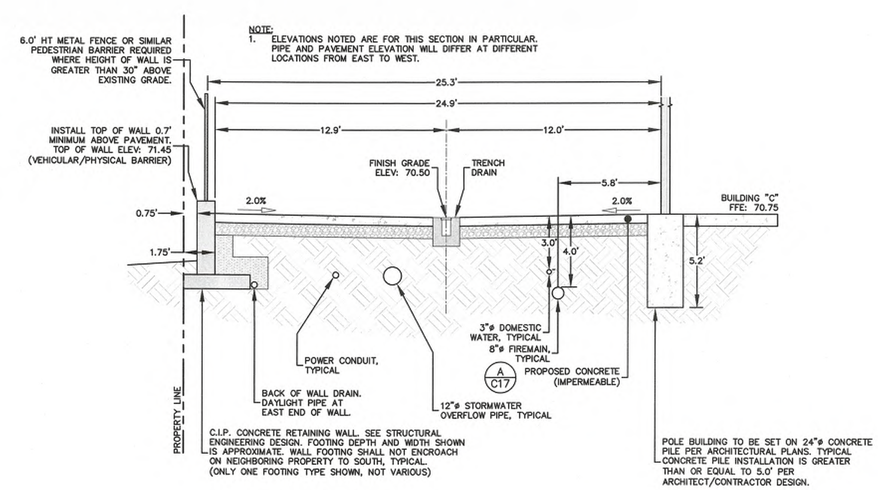

(D) SITE SECTION - BUILDING "C" TO PROPERTY LINE

SCALE 1" = 4'

0 2 4 8
1 inch = 4 ft.

APPROVED
AUG 31 2021
BY CITY OF FERNDALE
PUBLIC WORKS DEPARTMENT

AS-BUILT DRAWING

AS-BUILT NOTE:
ONLY INFORMATION NOTED AS AS-BUILT "(AB)" HAS BEEN PROVIDED BY PROJECT SURVEYOR. DATE OF POINT FILES 10/1/2019, 10/18/2019, 10/23/2020, 07/12/2021. CONTRACTOR PROVIDED ADDITIONAL MEASURE DOWNS 10/21/2019.

220 West Champion Street, Suite 200 t: 360.650.1408
Bellingham, WA 98225 f: 360.650.1401
FREELAND & ASSOCIATES

REV:	DATE:	DESCRIPTION:	BY:

CLIENT: PIONEER POST FRAME
6208 PORTAL WAY
FERNDALE, WASHINGTON

CALL BEFORE YOU DIG
FOR BURIED UTILITY LOCATIONS
1-800-424-5555

PROJECT LOCATION: PIONEER FLEXSPACE, LLC
6407 PORTAL WAY
FERNDALE, WASHINGTON

DRAWING #: 18084SP26 (PH5).DWG
DRAWN BY: CJL
DESIGNED BY: HAF
CHECKED BY: HAF

SHEET CONTENTS: SITE SECTIONS (BUILDING TO PROPERTY LINE)

HAROLD A. FREELAND III
STATE OF WASHINGTON
28519
REGISTERED PROFESSIONAL ENGINEER

JOB #: 18084	DATE: 8-30-2021
SCALE: HORIZ: 1"=4' VERT: N/A	SHEET: C23

00716.023 08/31/2021 RH

NOTE:
1. ELEVATIONS NOTED ARE FOR THIS SECTION IN PARTICULAR. PIPE AND PAVEMENT ELEVATION WILL DIFFER AT DIFFERENT LOCATIONS FROM EAST TO WEST.

WALL CONSTRUCTION PERMIT NOTE:
1. PUBLIC WORKS CANNOT APPROVE OF RETAINING WALL PLACEMENT AND CONSTRUCTION AS PROPOSED. RETAINING WALL PERMITS MUST BE OBTAINED THROUGH THE CITY OF FERNDALE BUILDING DEPARTMENT. RETAINING WALL PLANS AND SPECIFICATIONS WILL BE SUBMITTED TO THE BUILDING DEPARTMENT FOR REVIEW AND APPROVAL SEPARATELY PRIOR TO START OF CONSTRUCTION.

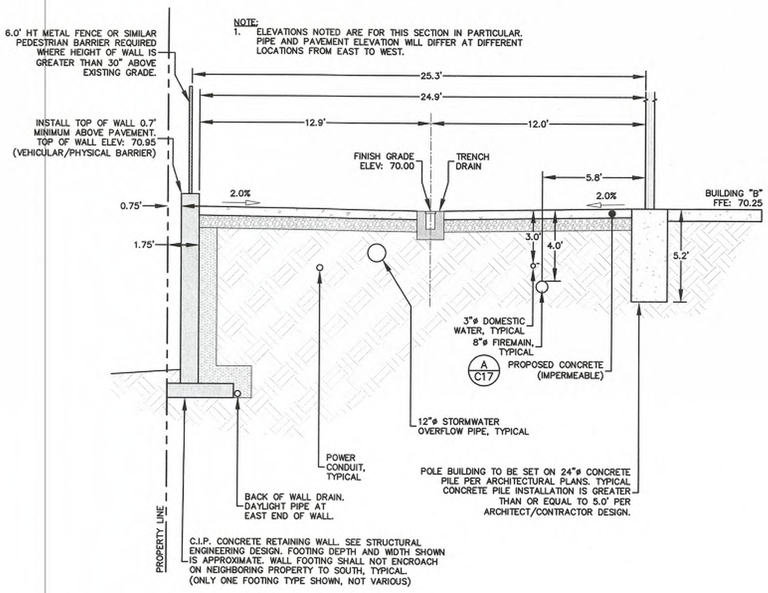

(A) SITE SECTION - BUILDING "B" TO PROPERTY LINE
SCALE 1" = 4'

0 2 4 8
1 inch = 4 ft.

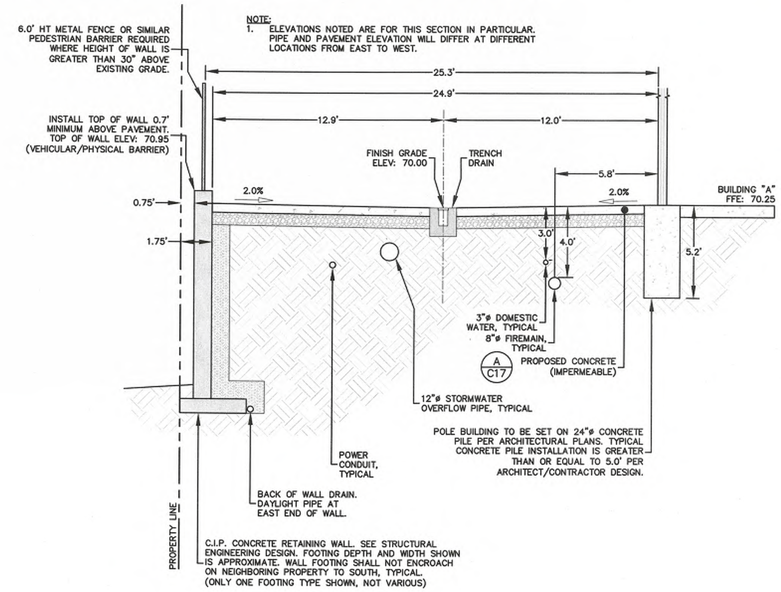

(B) SITE SECTION - BUILDING "A" TO PROPERTY LINE
SCALE 1" = 4'

0 2 4 8
1 inch = 4 ft.

NOTES:
1. ELEVATIONS NOTED ARE FOR THIS SECTION IN PARTICULAR. PIPE AND PAVEMENT ELEVATION WILL DIFFER AT DIFFERENT LOCATIONS FROM EAST TO WEST.
2. ALL WATER AND STORM CROSSINGS SHALL MAINTAIN A MINIMUM 0.75' (9") CLEARANCE FOR SEPARATION.
3. FACE OF THE VALVE FLANGE ON SOUTHERN SIDE SHALL BE INSTALLED 7.5' FROM THE LOT LINE OR LESS. TO BE DETERMINED IN THE FIELD AT TIME OF CONSTRUCTION. THE REVERSE THRUST BLOCK SHALL NOT BE INSTALLED BELOW THE WALL FOOTING. THE INTENT IS TO MINIMIZE THE CONNECTION POINT OFFSET FROM THE LOT LINE WHILE MEETING APPROVED DESIGN CRITERIA SHOWN.
4. DEPTH OF WATERMAIN SHALL REMAIN AS SPECIFIED PER CITY OF FERNDALE APPROVED PLANS. WALL HEIGHT AND WATERMAIN MAY BE ADJUSTED IN THE FIELD BASED ON COORDINATION WITH SOUTHERN PROPERTY OWNER AND THEIR CITY OF FERNDALE APPROVED DESIGN GRADES AND STORMWATER TREATMENT FACILITIES.
5. THE RETAINING BOTTOM WALL SHOWN ALONG THE SOUTHERN PROPERTY LINE HAS BEEN REVISED BASED ON FINISH GRADE SURFACE PREPARED BY PACIFIC SURVEYING & ENGINEERING. BOTTOM OF FOOTING IS TO BE MINIMUM 18" BELOW FINISH GRADES SHOWN.
6. APPROXIMATE LENGTH OF WALL REVISED IS 550 LF. WALL HEIGHT ADDED VARIES FROM 0.5' TO 2.25'. APPROXIMATELY 400 LF OF WALL HAS BEEN LOWERED 2.0'. SEE SHEET C10 FOR REVISED GRADES ALONG BASE OF WALL.

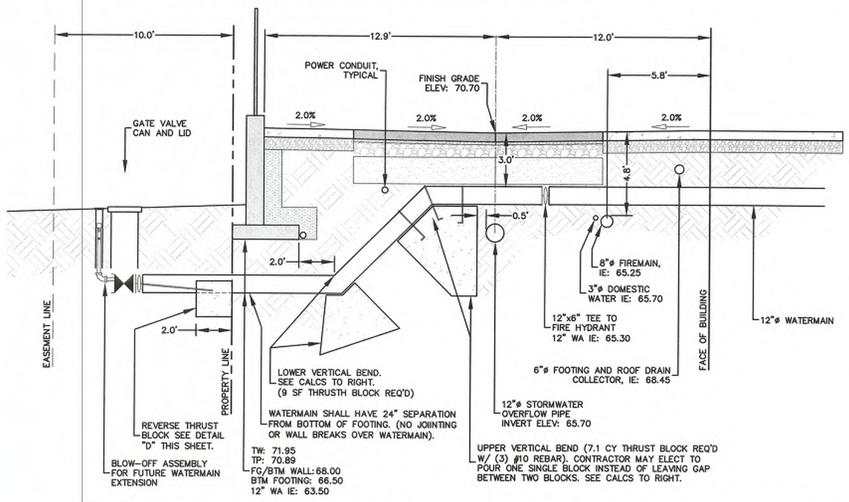

(C) SITE SECTION - WATERMAIN, FIREMAIN, AND STORMWATER CROSSINGS
SCALE 1" = 4'

0 2 4 8
1 inch = 4 ft.

WALL CONSTRUCTION NOTE:
THE CITY OF FERNDALE APPROVES OF THE NEW WATER MAIN CONFIGURATION PROPOSED WITHIN THE EASEMENT TO FACILITATE FUTURE DEVELOPMENT PLANS ON THE ADJACENT SOUTH PARCEL. THE WATER MAIN WILL BE INSTALLED APPROXIMATELY 2' DEEPER THAN THE ORIGINAL DESIGN AND THE HYDRANT CONFIGURATION WILL BE ALTERED TO BETTER SUIT THE ADJUSTED GRADES NEEDED TO DEVELOP THE SOUTH PARCEL. SPECIFIC CHANGES TO THE DEPTH OF FOOTING FOR THE PROJECT RETAINING WALL HAVE ALSO BEEN ADJUSTED DEEPER TO FACILITATE THE ADJACENT SOUTH PARCEL DEVELOPMENT PLAN PROJECTED FINISH GRADES. PUBLIC WORKS HAS NO OPPOSITION TO THE GRADE /ELEVATION CHANGES PROPOSED FOR THE RETAINING WALL HOWEVER, DUE TO CONTRACTUAL OBLIGATIONS BETWEEN THE TWO PARTIES INVOLVED WITH THE TWO SEPARATE PARCELS THE CITY RECOMMENDS A SEPARATE THIRD PARTY INSPECTION / SURVEY BE PERFORMED TO VERIFY SPECIFIC FOOTING GRADE REQUIREMENTS HAVE BE MET TO SATISFY SAID CONTRACTUAL OBLIGATIONS AS THIS IS NOT PART OF THE CITY'S NORMAL INSPECTION PROCESS. PUBLIC WORKS CANNOT APPROVE STRUCTURAL CHANGES TO THE WALL AS PROPOSED AND WILL THEREFORE RECOMMEND THE APPLICANT SUBMIT THE PROPOSED CHANGES TO THE BUILDING DEPARTMENT FOR REVIEW AND APPROVAL PRIOR TO CONSTRUCTION.

THRUST FORCE

$P = 210$ PSI

$R_H = 2\ PA \sin(\Theta \div 2)$

$R_H = (2)\ (210\ psi) \times 154\ in^2 \times \sin(45 \div 2)$

$R_H = 24{,}752$ lbs

UPPER VERTICAL BEND

$W_B = L \times W \times D$ (150 lbs)

$W_B = 5' \times 10' \times 4'$ (150 lbs)

$W_B = 28{,}800$ lbs $> 24{,}752$ lbs

$A_{Reqd.} = FS \times (R_H \div f_s)$

$A_{Reqd.} = 1.5\ (24{,}752\ lbs \div 24{,}000\ psi)$

$A_{Reqd.} = 1.55\ in^2$

$A_{provided} = 3$ bars $\times 2 \times 1.27\ in^2$

$A_{provided} = 7.62\ in^2 > 1.55\ in^2$

LOWER VERTICAL BEND

$A_B = L \times W$

$A_B = 3$ ft. $\times 3$ ft.

$A_B = 9\ ft^2$

$P_B = R_V \div A_B$

$P_B = 24{,}752\ lbs \div 9\ ft^2$

$P_B = 2750\ psf < 4000\ psf$

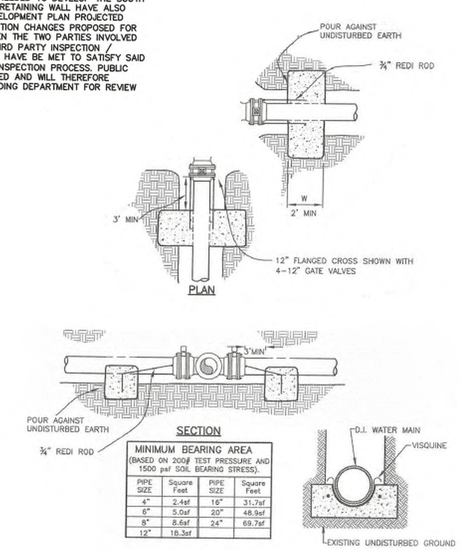

MINIMUM BEARING AREA
(BASED ON 200# TEST PRESSURE AND 1500 psf SOIL BEARING STRESS).

PIPE SIZE	Square Feet	PIPE SIZE	Square Feet
4"	2.4sf	16"	31.7sf
6"	5.0sf	20"	48.9sf
8"	8.6sf	24"	69.7sf
12"	18.3sf		

(C) REVERSE THRUST BLOCK
NTS

APPROVED
AUG 31 2021
BY CITY OF FERNDALE
PUBLIC WORKS DEPARTMENT

AS-BUILT DRAWING
AS-BUILT NOTE:
ONLY INFORMATION NOTED AS AS-BUILT "(AB)" HAS BEEN PROVIDED BY PROJECT SURVEYOR. DATE OF POINT FILES 10/1/2019, 10/18/2019, 10/23/2020, 07/12/2021. CONTRACTOR PROVIDED ADDITIONAL MEASURE DOWNS 10/21/2019.

220 West Champion Street, Suite 200 t: 360.650.1408
Bellingham, WA 98225 f: 360.650.1401
FREELAND & ASSOCIATES

REV:	DATE:	DESCRIPTION:	BY:
1	1/30/2019	CROSS SECTION REVISION PER OWNER REQUEST	HAF

CLIENT: PIONEER POST FRAME
6208 PORTAL WAY
FERNDALE, WASHINGTON

CALL BEFORE YOU DIG
FOR BURIED UTILITY LOCATIONS
1-800-424-5555

PROJECT LOCATION: PIONEER FLEXSPACE, LLC
6407 PORTAL WAY,
FERNDALE, WASHINGTON

DRAWING #: 18084SP26 (PH5).DWG
DRAWN BY: CJL
DESIGNED BY: HAF
CHECKED BY: HAF

SHEET CONTENTS: SITE SECTIONS (BUILDING TO PROPERTY LINE)

HAROLD A. FREELAND III
STATE OF WASHINGTON
28519
REGISTERED PROFESSIONAL ENGINEER

JOB #: 18084
DATE: 8-30-2021
SCALE: HORIZ: 1"=4' VERT: N/A
SHEET: C24

00716.024 08/31/2021 RH