CITY OF FERNDALE
WASHINGTON

IMPROVEMENTS TO:

EAST MAIN STREET
&
B.N.I. UNDERPASS NO. 63.5

U.A.B. PROJECT NO. 8-2-158 (1)

SCHEDULE OF DRAWINGS

B.N.I. UNDERPASS - BRIDGE 63.5

1. GENERAL PLAN & ELEVATION
2. LAYOUT AND GENERAL NOTES
3. ABUTMENTS
4. ABUTMENTS
5. RETAINING WALLS
6. PIER DETAILS
7. BILL OF REINFORCEMENT
8. FRAMING PLAN & GIRDER DETAILS
9. MISCELANEOUS STEEL DETAILS
10. BEARING ASSEMBLIES
11. BALLAST PLATE
12. WALKPLATE DETAILS
13. WATERPROOFING & DRAINAGE
14. RAILING DETAILS

ROADWAY

15. PLAN & PROFILE - EAST MAIN ST.
16. PLAN & PROFILE - EAST MAIN ST.
17. PLAN & PROFILE - HOVANDER ROAD
18. ROADWAY SECTIONS & DETAILS

SHOOFLY

19. PLAN & PROFILE, TYP. ROADBED SECTION

ELECTRICAL

20. PUMP STATION ELECTRICAL POWER SUPPLY

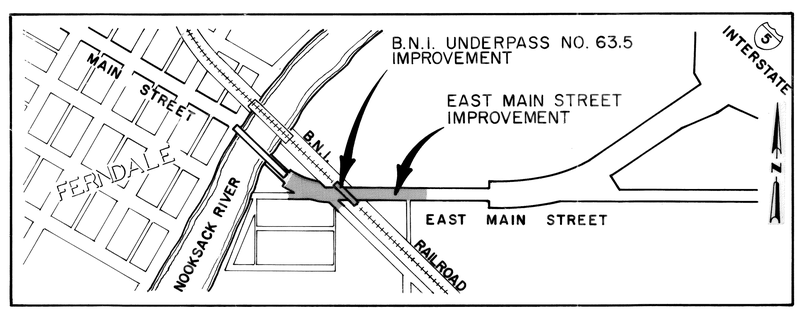

VICINITY MAP

ENTRANCO Engineers
ENVIRONMENTAL AND TRANSPORTATION CONSULTANTS

CITY OFFICIALS

MAYOR
CECIL BARR

CITY COUNCIL
JON DONNELLAN
HAROLD REIMER
J. A. IRWIN
EVERETT SANDERS
WALTER TANGUY

CLERK - TREASURER
ROLAND SIGNETT

UTILITIES SUPERINTENDENT
JOHN ELEY

00171.001 2.8.06 KR

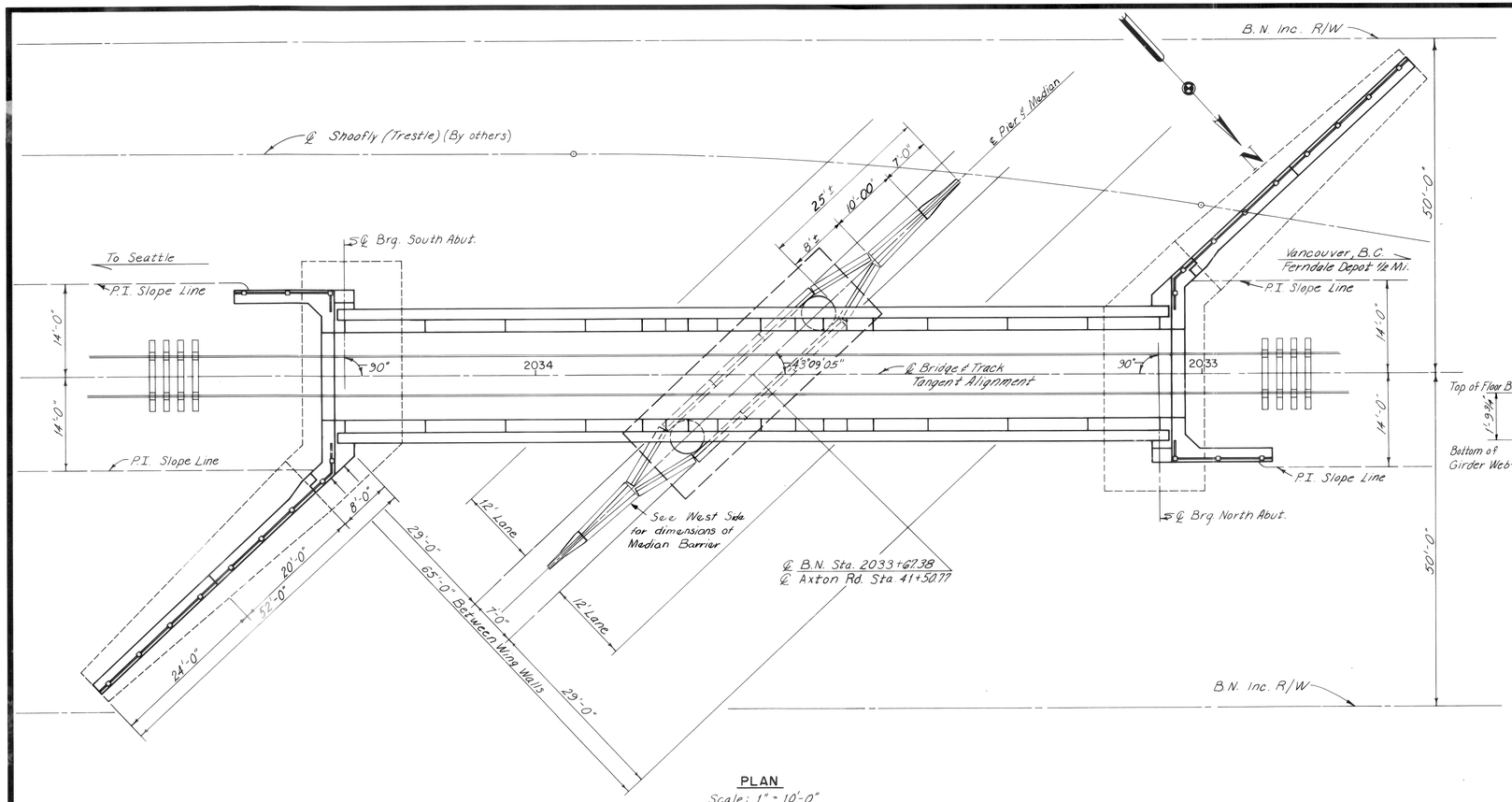

PLAN

Scale: 1" = 10'-0"

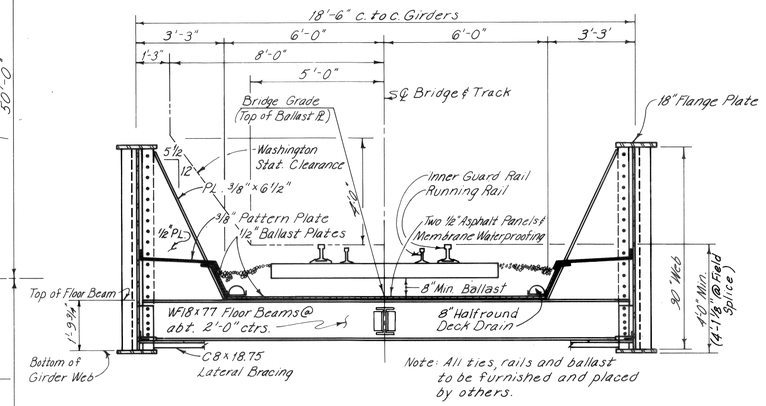

TYPICAL SECTION THROUGH DECK

Scale: 3/8" = 1'-0"

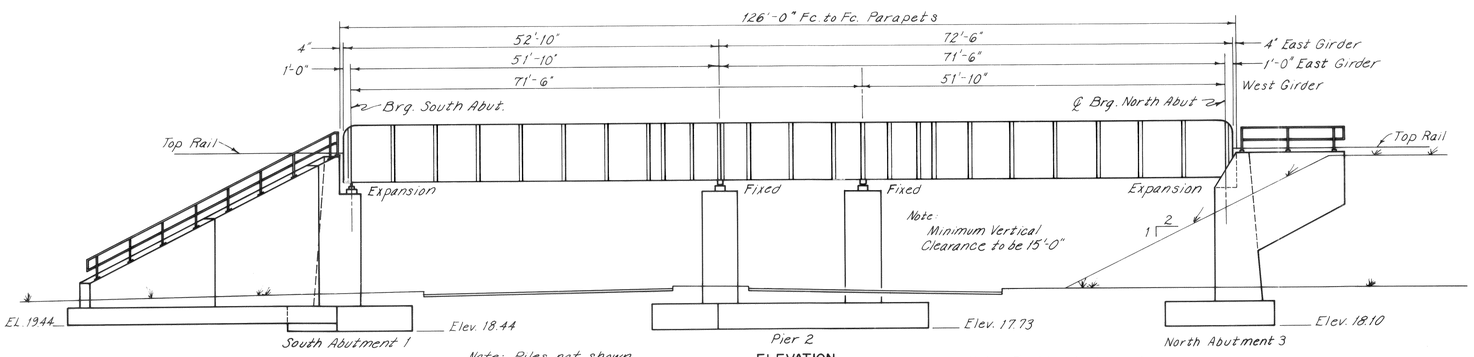

Note: Piles not shown.

ELEVATION

Scale: 1" = 10'-0"

Note: Existing bridge not shown and to be removed in advance of construction

INDEX OF SHEETS

Recommended by G. F. Dalquist July, 1977
Director Bridge Engineering

Approved B. H. Gundersen, 19__
Assistant Vice President Engineering - Burlington Northern Inc.

Approved _____, 19__
Washington State Bridge Engineer

BENCH MARKS

U.S.G.S. B.M. L6-26B, SW Corner
Nooksack River Highway Bridge, Top
Concrete Curb (El. 34.964 = EL. 34.90 PROJECT DATUM

Nat'l Geodetic Survey BM. M454
Located West End of South Abutment
(geographic directions) B.N
Bridge No. 63.5 [El. 41.833 (UNADJ)] = EL. 40.14 PROJ. DATUM

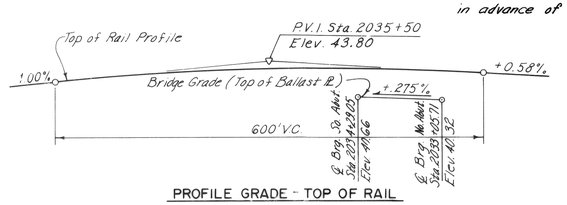

PROFILE GRADE - TOP OF RAIL

NOTE:
SEE SHEET NO. 2 FOR
SUMMARY OF QUANTITIES

EDGAR B. JOHNSON
STATE OF WASHINGTON
REGISTERED
PROFESSIONAL ENGINEER

BURLINGTON NORTHERN

BRIDGE OVER AXTON ROAD

FERNDALE, WASHINGTON

GENERAL PLAN AND ELEVATION

HOWARD NEEDLES TAMMEN & BERGENDOFF HNTB

DATE 4-29-77
MADE REO
CHECKED ROC

SHEET 1 OF 20

RE 00.8.8 780.11.1.00

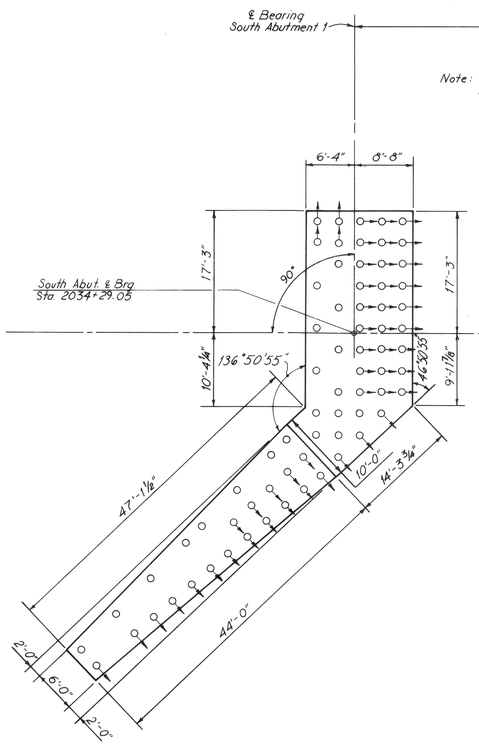

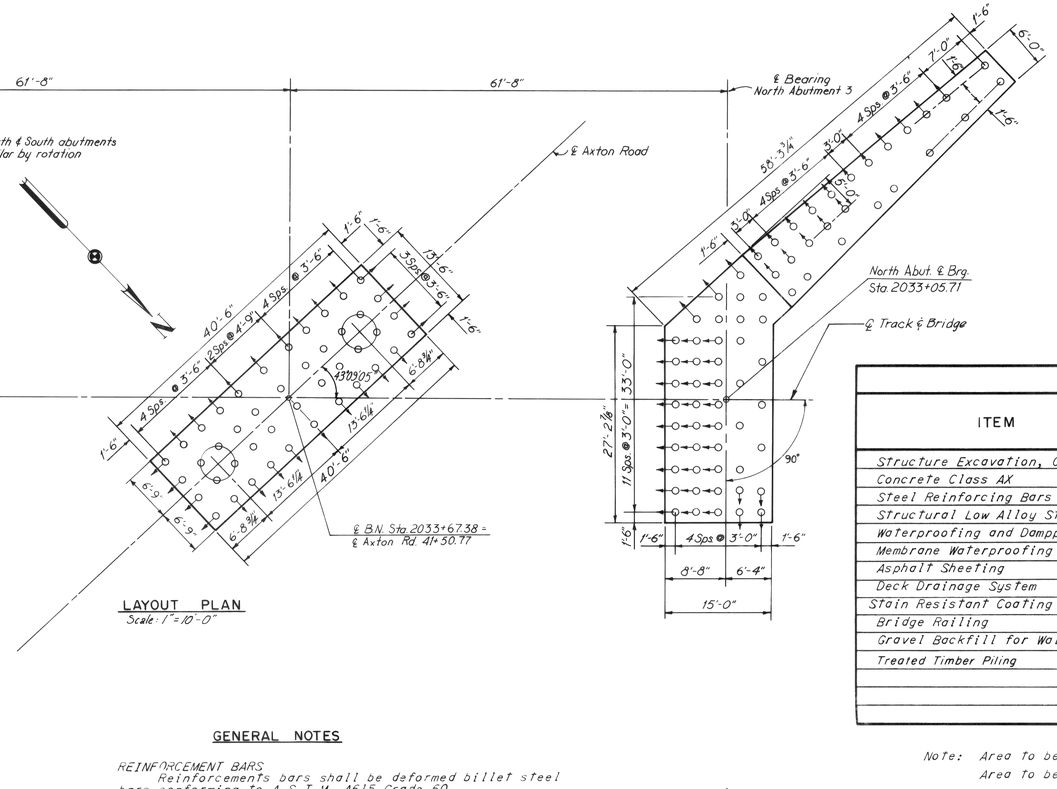

LAYOUT PLAN
Scale: 1" = 10'-0"

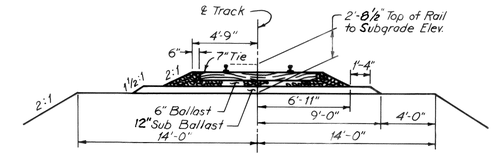

TYPICAL EMBANKMENT SECTION
Scale: ¾" = 1'-0"

SUMMARY OF QUANTITIES

ITEM	UNIT	SUBSTRUCTURE SOUTH ABUT. 1	SUBSTRUCTURE PIER 2	SUBSTRUCTURE NORTH ABUT. 3	SUPER-STRUCTURE	TOTAL
Structure Excavation, Class A	Cu. Yds.	255	186	255		696
Concrete Class AX	Cu. Yds.	252	104	252		608
Steel Reinforcing Bars	Lbs.	14,368	12,529	14,368		41,265
Structural Low Alloy Steel	Lump Sum					Lump Sum
Waterproofing and Dampproofing	Lump Sum					Lump Sum
Membrane Waterproofing	Square				20.5	20.5
Asphalt Sheeting	Square				18.8	18.8
Deck Drainage System	Lump Sum					Lump Sum
Stain Resistant Coating	Lump Sum					Lump Sum
Bridge Railing	Lin. Ft.	73		73		146
Gravel Backfill for Walls	Cu. Yds.	38		38		76
Treated Timber Piling	Lin. Ft.	3,266	2,024	3,266		8,556

Note: Area to be covered with Stain Resistant Coating = 3072 Sq. Ft.
Area to be covered with Dampproofing = 3135 Sq. Ft.

GENERAL NOTES

SPECIFICATIONS

State of Washington, Department of Highways, Standard Specifications for Road and Bridge Construction dated 1977 except as modified by the Contract Specifications or the 1975 A.R.E.A. Specifications for Railway Bridges.

LOADING

A. Live Load : Coopers E-80
B. Impact : A.R.E.A. 1975, for diesels.
C. Other Loads : A.R.E.A. 1975

DESIGN STRESSES

4,000 psi - Class AX Concrete
24,000 psi - Grade 60 Reinforcing Steel
20,000 psi - Structural Carbon Steel (A36)
27,500 psi - Structural Low Alloy Steel (A588)

DIMENSIONS

All dimensions are horizontal and measured at 60°F.

EXCAVATION AND BACKFILL

Existing railroad embankment in vicinity of bridge will be excavated **in advance of bridge construction.**

Quantity of Structure Excavation for payment is computed with the elevations of existing ground as the upper limit for each substructure unit.

Granular backfill shall be placed behind abutment and wingwalls. See Sheets No. 3 and 5.

CONCRETE:

All concrete shall be Class AX. All exposed corners shall be beveled ¾" unless otherwise noted.

Surfaces of piers and abutments which are to be exposed shall be kept free of any foreign materials which might cause staining of the concrete. These surfaces shall be coated with a stain resistant coating as described in the Special Provisions.

REINFORCEMENT BARS

Reinforcements bars shall be deformed billet steel bars conforming to A.S.T.M. A615 Grade 60.

All bars of a series shall vary by a constant increment.

The clear distance between reinforcement bars and face of concrete shall be 3" in footings and 2" elsewhere unless otherwise noted.

Unless otherwise shown on the plans stress bars shall be lapped 40 diameters in making splices and nominal bars shall be lapped 24 diameters.

Bar dimensions are given center to center of bars. Bending dimensions are out to out.

Radii are to centerline of bar. All reinforcement bars are designated on the plans by bar numbers. The letter indicates the location and the first digit or the first two digits of each bar mark indicate the bar size.

SUBSTRUCTURE

Bridge seat reinforcement shall be carefully placed to avoid interference with drilling holes for anchor bolts. The superstructure girders shall be erected in final position prior to drilling holes for and placing anchor bolts.

For setting Shoes see Special Provisions.

A subsurface investigation program was conducted at the site of the proposed construction by Hart, Crowser and Associates, Inc. and the results are compiled in a report dated July 30, 1976. The entire report is on file in the office where plans are available and is available for examination upon request.

PILE NOTES

All piles to be 10" minimum tip diameter treated timber. 71 piles estimated length 46 feet required for each abutment and wall and 44 piles estimated length 46 feet required for pier.

Piles marked thus O→ to be battered to amount indicated on the plans in the direction shown.

Pile spacing shown is at bottom of footing.

SUPERSTRUCTURE

Ballast, rails and ties will be furnished and installed by railroad forces.

STRUCTURAL STEEL

All structural steel shall conform to the requirements of A.S.T.M. A588, Grade A, B or C. Other grades listed in A.S.T.M. A588 may be used if approved by the Engineer. All field connections shall be made with High Strength bolts. All bolts will be ¾" ϕ except those noted otherwise on the plans. Holes for bolts shall be 1/16" larger than the nominal bolt diameter.

OPTIONAL SHOP SPLICE

In lieu of the bolted girder field splice shown on the plans, a shop welded girder flange and web splice may be used at the location shown on the plans. Payment for structural steel will be based on the use of the bolted girder field splice.

No additional girder flange or web splices will be permitted except at Top flanges 6" from abutment bearings. Payment for structural steel will be based on the same flange sizes as adjacent spans for the vertical end sections.

WELDING

All welding shall be done in accordance with the American Welding Society Structural Welding Code D1.1-75, except as modified by the Washington Standard Specifications and the Special Provisions.

GIRDER CAMBER

The steel girders shall be cambered such that under Total dead load the top of girder webs will parallel the profile grade of the steel deck plate. Deflections shown are for weight of steel, ballast, ties and track.

WATERPROOFING AND DAMPPROOFING

All construction joints shall be waterproofed and all surfaces in contact with earth above the top of footings shall be dampproofed. See Special Provisions.

JOINTS AND JOINT FILLER

For preformed joint filler see schedule on Sheet No. 4 and Special Provisions.

BEARING ASSEMBLIES

The position of the expansion bearing assemblies shall be adjusted so that the centerline of the sliding plate corresponds with the centerline of the masonry plate at 60°F.

For bearing assemblies see Sheet No. 10.

LEGEND

n.f. denotes near face
f.f denotes far face
e.f. denotes each face
Typ. denotes Typical
Ser. denotes series
Sps. denotes spaces

ESTIMATED WEIGHT OF STRUCTURAL LOW ALLOY STEEL
Total Estimated Weights **296,047** lbs.

BURLINGTON NORTHERN

BRIDGE OVER AXTON ROAD
FERNDALE, WASHINGTON

LAYOUT AND GENERAL NOTES

HOWARD NEEDLES TAMMEN & BERGENDOFF **HNTB**

DATE 4-29-77
MADE WRK
CHECKED RoC

SHEET 2 OF 20

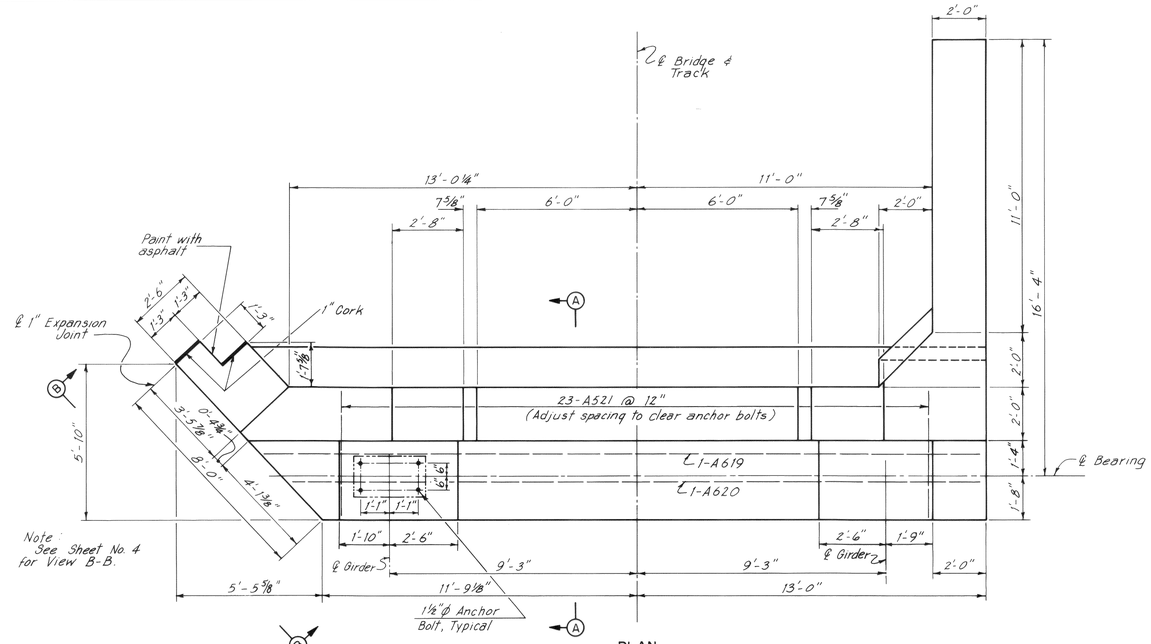

PLAN
Scale: 3/8" = 1'-0"

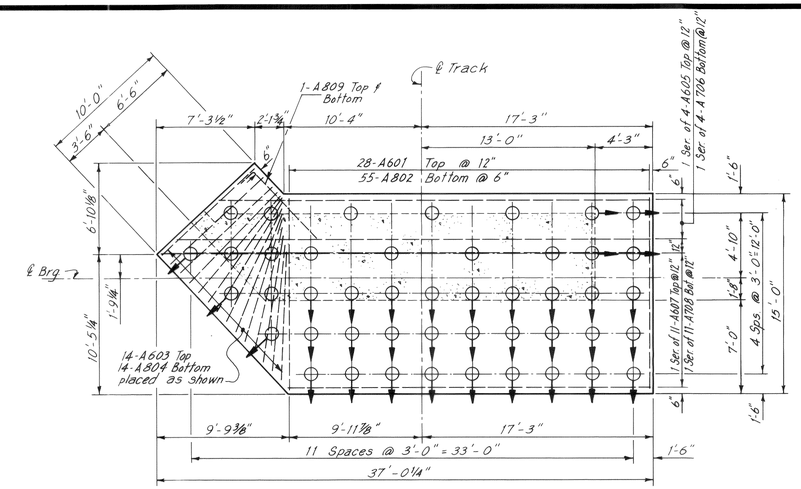

Note: Batter piles 3"/ft. in direction shown by arrows.

FOOTING PLAN
Scale: 3/16" = 1'-0"

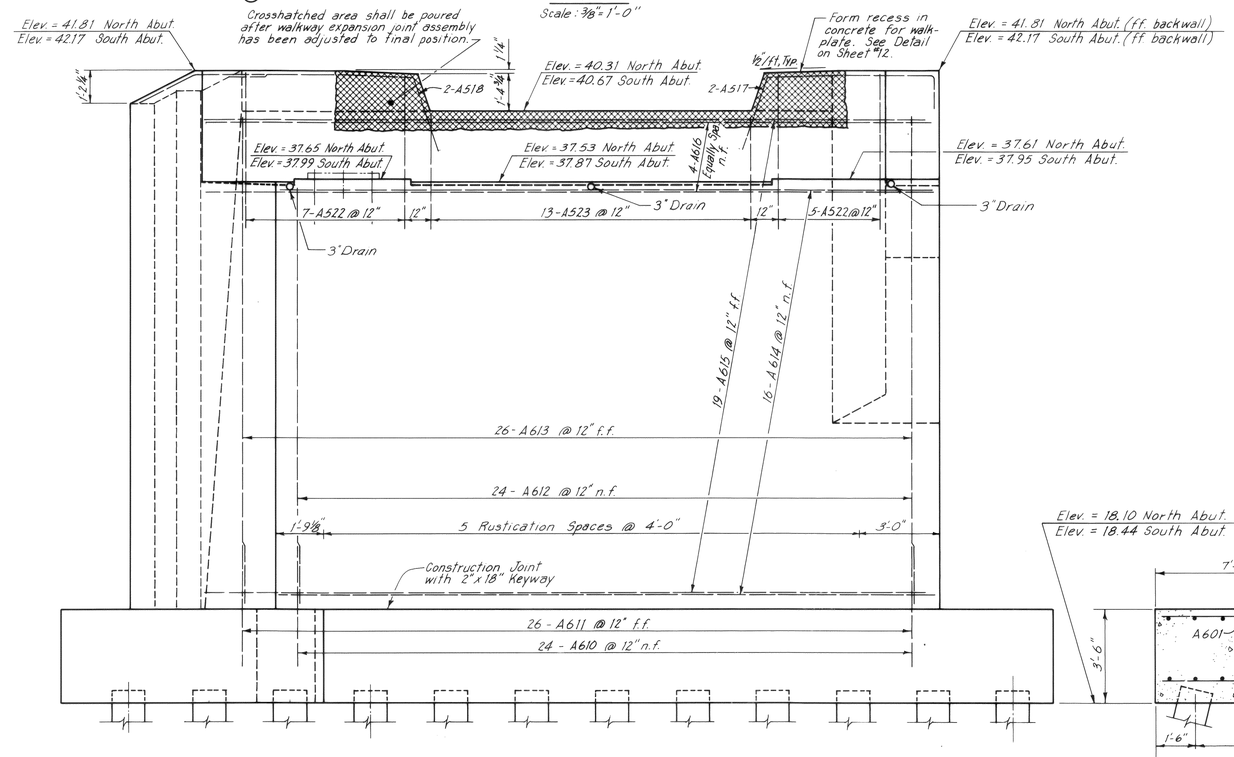

ELEVATION
Scale: 3/8" = 1'-0"

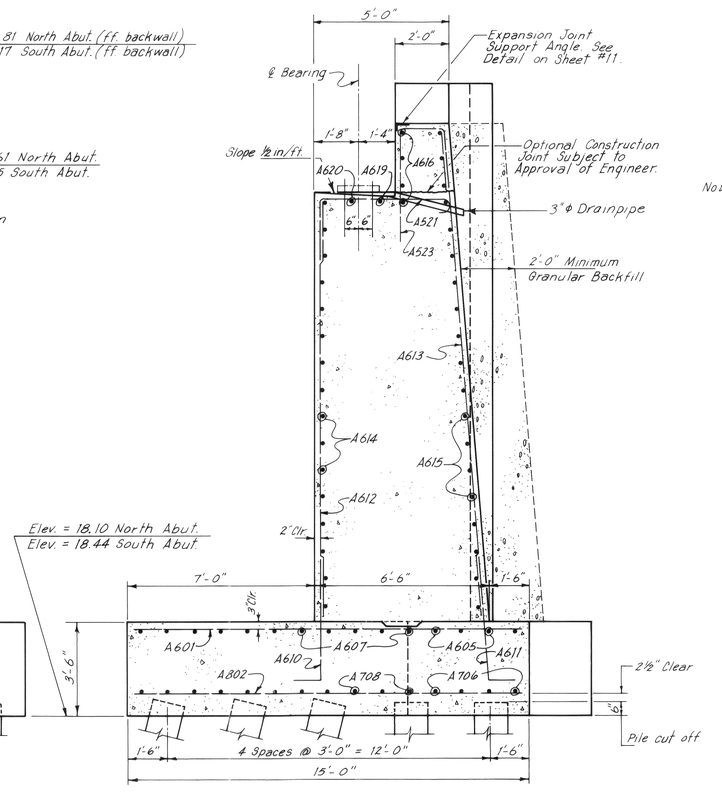

Note: 3" Drainpipe to be considered incidental.

SECTION A-A
Scale: 3/8" = 1'-0"

BURLINGTON NORTHERN

BRIDGE OVER AXTON ROAD

FERNDALE, WASHINGTON

ABUTMENTS

HOWARD NEEDLES TAMMEN & BERGENDOFF HNTB

DATE 4-29-77
MADE KEB
CHECKED DRA

SHEET 3 OF 20

00171.004 2.8.00 KA

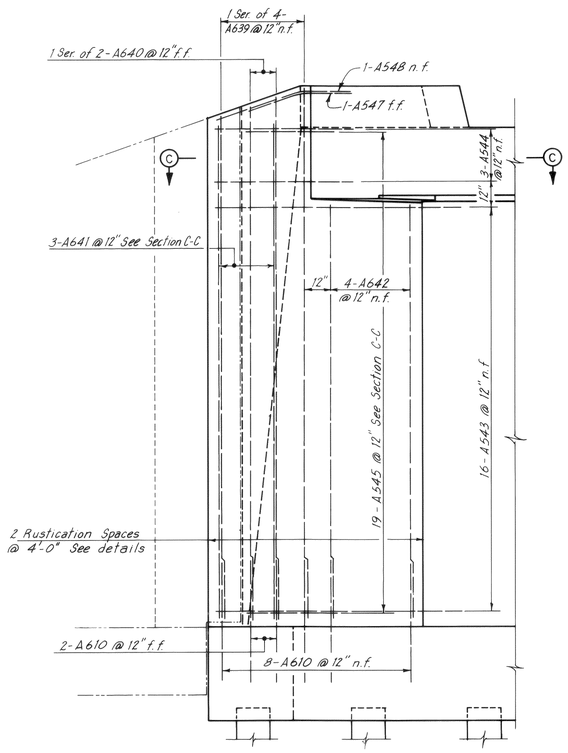

VIEW B-B
Scale: 3/8" = 1'-0"

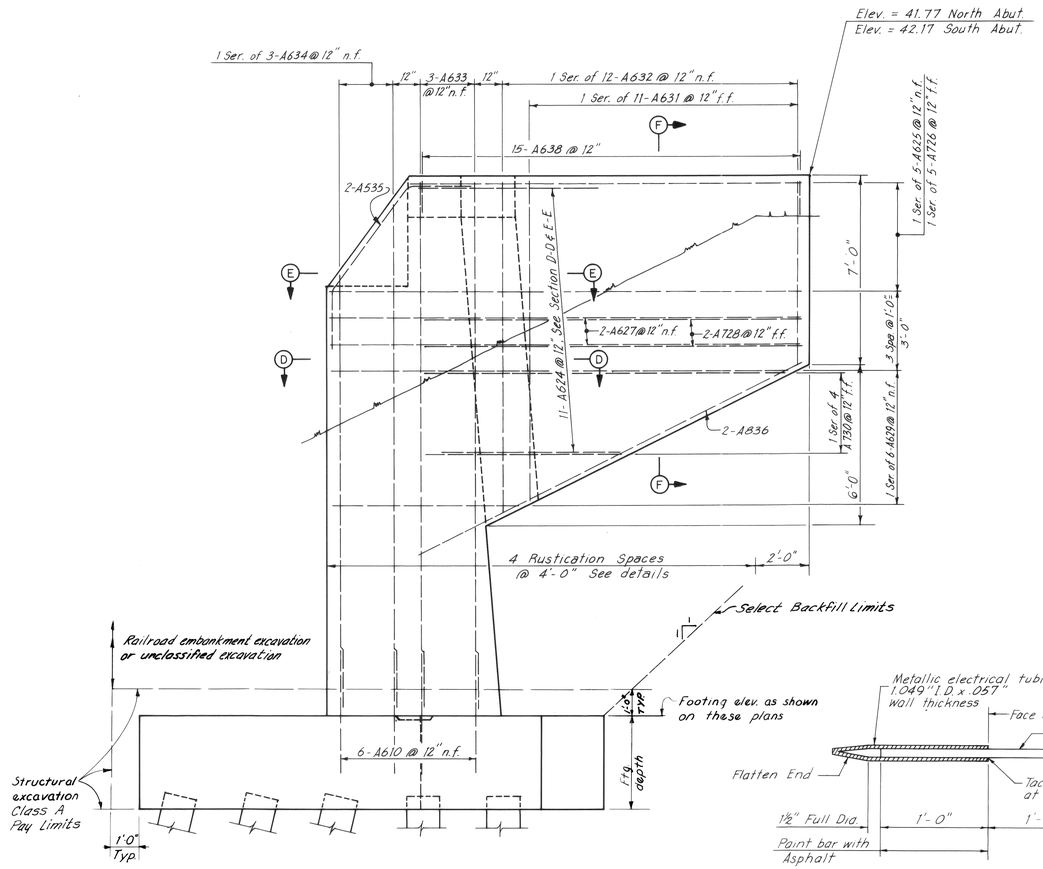

WINGWALL ELEVATION
Scale: 3/8" = 1'-0"

LIST OF JOINT FILLER *		
DESCRIPTION	SIZE	LOCATION
1" Cork	2-1'-3" x 19'-0"	Retaining Wall
1" Cork	2-1'-3" x 19'-6"	Retaining Wall
15 lb. Asphalt Felt	4-5½ x 2'-6"	Abutment
15 lb. Asphalt Felt	2-1'-3" x 1'-3"	Retaining Wall

*Joint filler list is for the contractors convenience only.

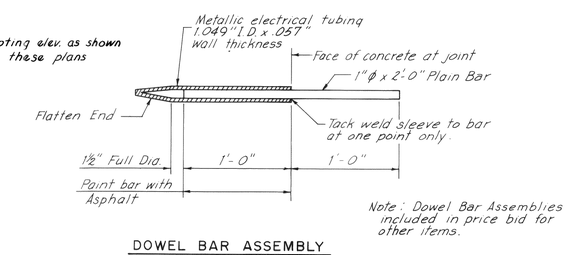

Note: Dowel Bar Assemblies included in price bid for other items.

DOWEL BAR ASSEMBLY
Scale: 1½" = 1'-0"

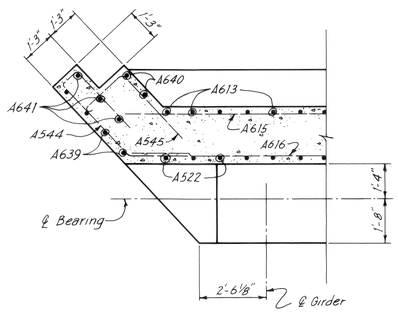

SECTION C-C
Scale: 3/8" = 1'-0"

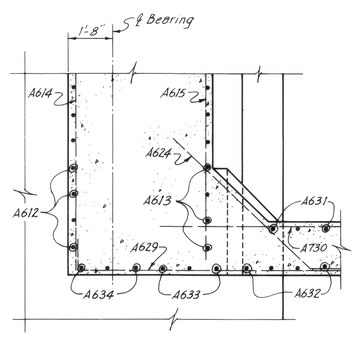

SECTION D-D
Scale: 3/8" = 1'-0"

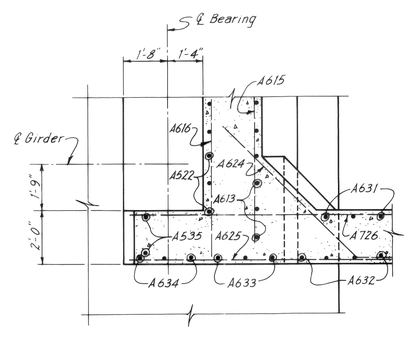

SECTION E-E
Scale: 3/8" = 1'-0"

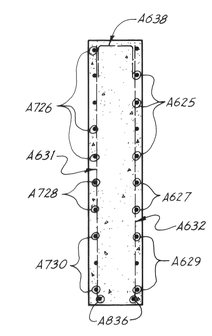

SECTION F-F
Scale: 3/8" = 1'-0"

BURLINGTON NORTHERN

BRIDGE OVER AXTON ROAD
FERNDALE, WASHINGTON

ABUTMENTS

HOWARD NEEDLES TAMMEN & BERGENDOFF HNTB

DATE 4-29-77
MADE KEB
CHECKED DRA

SHEET 4 OF 20

SECTION Y-Y
Scale: 1/2" = 1'-0"

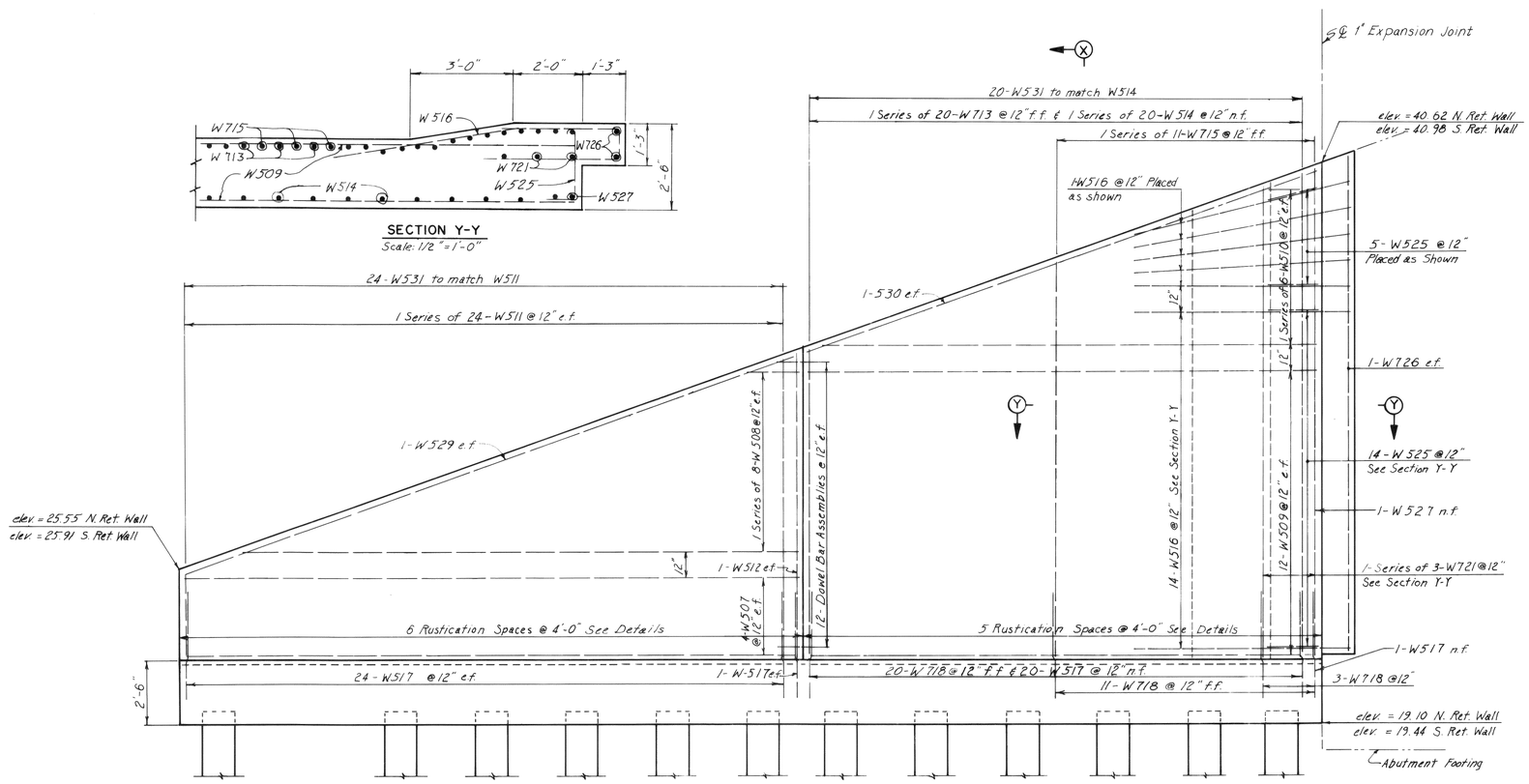

ELEVATION
Scale: 3/8" = 1'-0"

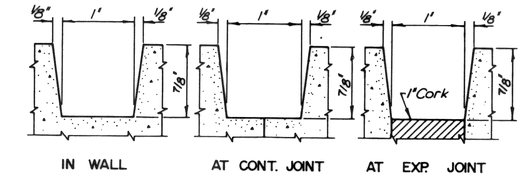

IN WALL AT CONT. JOINT AT EXP. JOINT

RUSTICATION DETAILS
No Scale

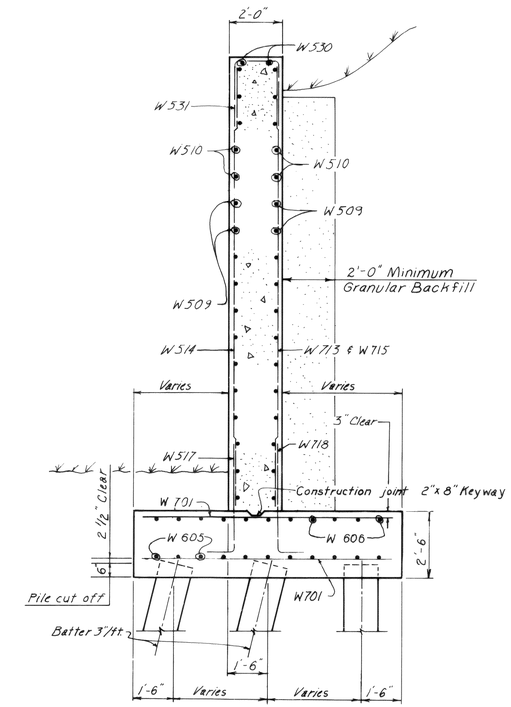

SECTION X-X
Scale: 3/8" = 1'-0"

Note:
Form temporary recess in East retaining wall to clear shoofly trestle. (Recess to extend about 2 feet below base of rail.)

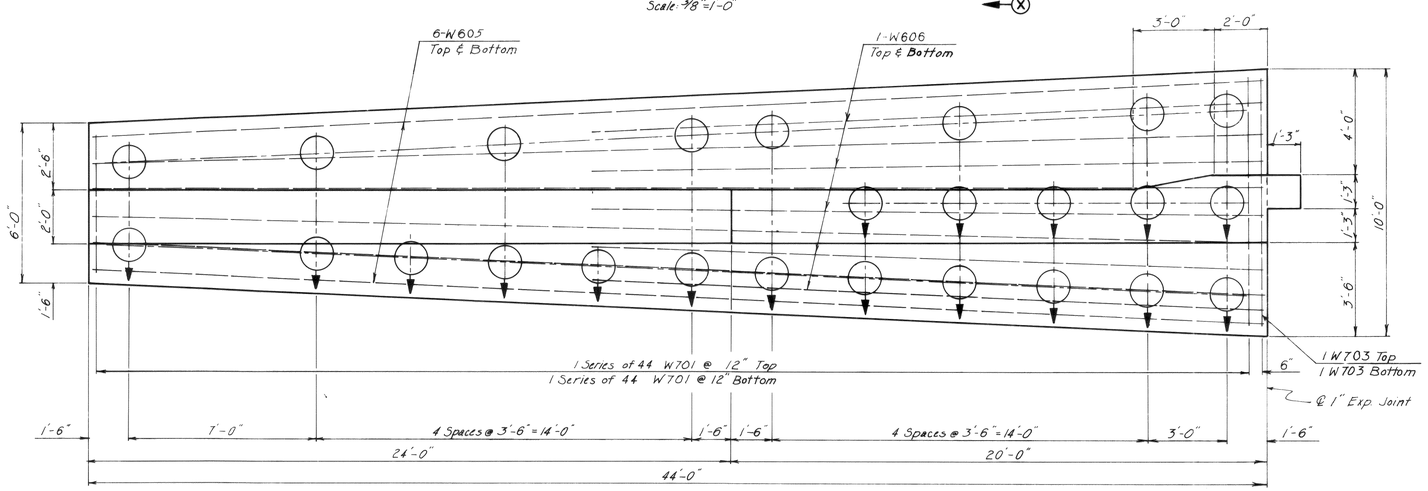

PLAN
Scale: 3/8" = 1'-0"

BURLINGTON NORTHERN

BRIDGE OVER AXTON ROAD
FERNDALE, WASHINGTON

RETAINING WALLS

HOWARD NEEDLES TAMMEN & BERGENDOFF HNTB

DATE 4-29-77
MADE DJW
CHECKED DRA

SHEET 5 OF 20

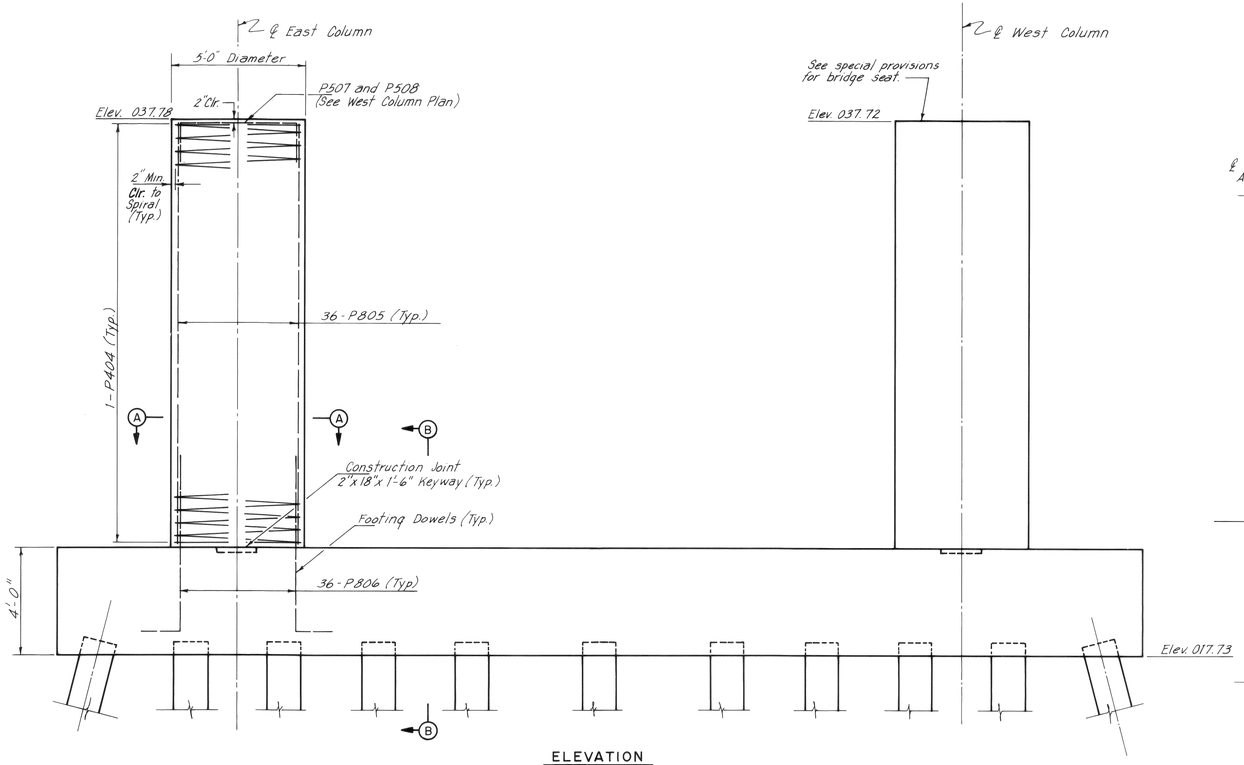

ELEVATION
Scale: 3/16" = 1'-0"

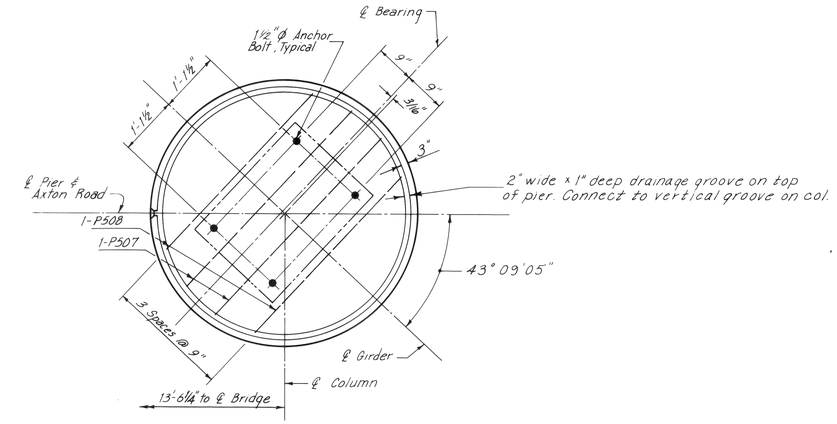

WEST COLUMN PLAN
(East Column Similar by Rotation)
Scale: 3/4" = 1'-0"

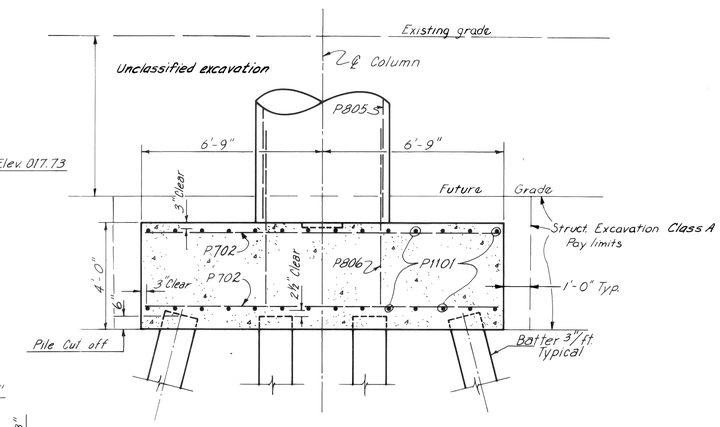

SECTION B-B
Scale: 3/16" = 1'-0"

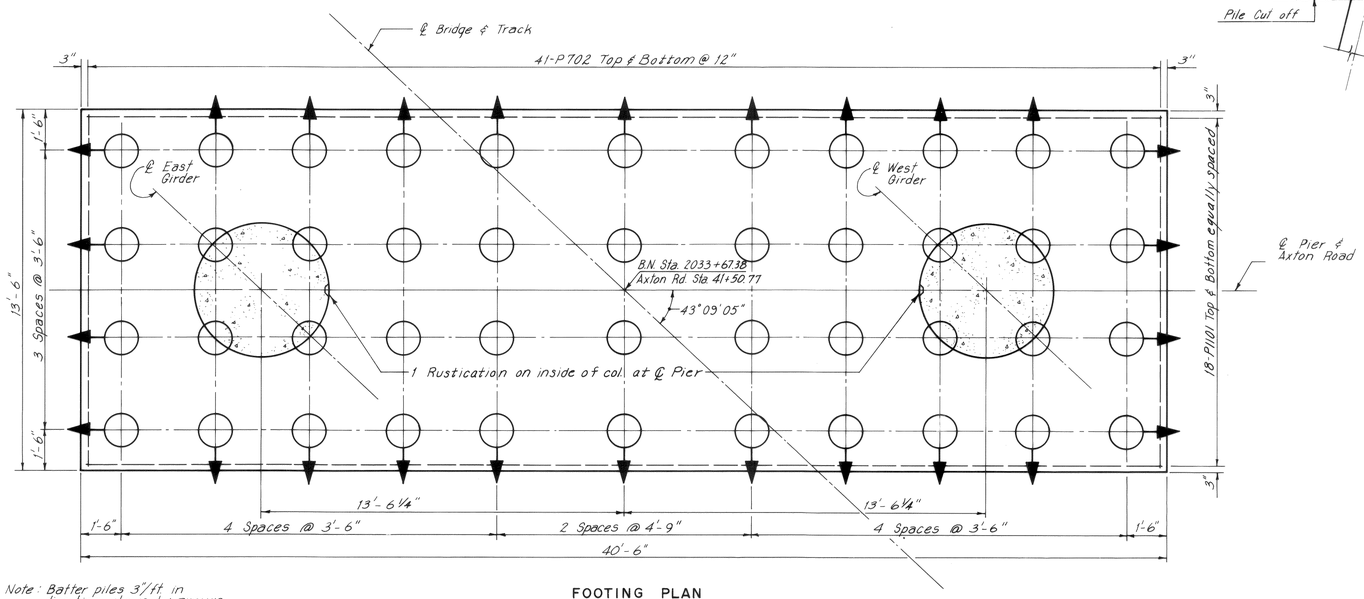

Note: Batter piles 3"/ft. in direction shown by arrows.

FOOTING PLAN
Scale: 3/16" = 1'-0"

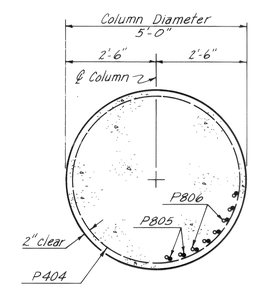

SECTION A-A
Scale: 1/2" = 1'-0"

BURLINGTON NORTHERN

BRIDGE OVER AXTON ROAD
FERNDALE, WASHINGTON

PIER DETAILS

HOWARD NEEDLES TAMMEN & BERGENDOFF **HNTB**

DATE 4-29-77
MADE KEB
CHECKED DRA

SHEET 6 OF 20

BILL OF REINFORCEMENT

ABUTMENT (2 REQUIRED)

BAR	NO.	SIZE	LENGTH	TYPE	DIMENSIONS A	B	C	LOCATION
A601	28	6	14-0	Str.				Footing, Long.
A802	55	8	14-0	Str.				Footing, Long.
A603	14	6	9-6	Str.				Footing, Long.
A804	14	8	9-6	Str.				Footing, Long.
A605	1Ser.	6	31-6to	Str.				Footing, Trans.
	of 4		34-9					
A706	1Ser.	7	31-6to	Str.				Footing, Trans.
	of 4		34-9					
A607	1Ser.	6	34-9to	Str.				Footing, Trans.
	of 11		36-6					
A708	1Ser.	7	34-9to	Str.				Footing, Trans.
	of 11		36-6					
A809	2	8	8-6	104	1-6	7-0		Footing, Trans.
A610	40	6	7-9	104	1-0	6-9		Footing, Dowel
A611	26	6	7-9	108	1-0		1	Footing, Dowel
A612	24	6	15-6	Str.				Stem, Vert.
A613	26	6	18-6	Str.				Stem, Vert.
A614	16	6	24-3	Str.				Stem, Horiz.
A615	19	6	27-3	Str.				Stem, Horiz.
A616	4	6	27-3	Str.				Backwall, Horiz.
A517	2	5	9-9	129	1-0	5-9	5	Backwall, Horiz.
A518	2	5	9-0	128	6-0		5	Backwall, Horiz.
A619	1	6	26-6	Str.				Stem, Horiz.
A620	1	6	25-6	Str.				Stem, Horiz.
A521	23	5	7-6	161	4-9	0-9		Stem, Horiz.
A522	12	5	11-0	144	1-8	5-9	1	Backwall, Horiz.
A523	13	5	8-0	144	1-8	4-3	1	Backwall, Horiz.
A624	11	6	9-6	128	7-0		12	Wingwall, Horiz.
A625	1Ser.	6	14-9	Str.				Wingwall, Horiz
	of 5		17-8					
A726	1Ser.	7	14-9	Str.				Wingwall, Horiz.
	of 5		17-8					
A627	2	6	17-8	Str.				Wingwall, Horiz.
A728	2	7	14-3	Str.				Wingwall, Horiz.
A629	1Ser.	6	7-0	Str.				Wingwall, Horiz.
	of 6		17-3					
A730	1Ser.	7	7-3	Str.				Wingwall, Horiz.
	of 4		13-5					
A631	1Ser.	6	7-0	Str.				Wingwall, Vert.
	of 11		12-0					
A632	1Ser.	6	7-0	Str.				Wingwall, Vert.
	of 12		12-6					
A633	3	6	20-0	Str.				Stem, Vert.
A634	1Ser	6	16-0to	Str.				Stem, Vert.
	of 3		19-3					
A535	2	5	9-0	106	5-0	2-0	12	Masswall
A836	2	8	16-0	Str.				Wingwall
A638	15	6	5-8	105	1-8	2-0		Wingwall
A639	1Ser	6	18-9	Str.				Wingwall, Vert.
	of 4		20-0					
A640	1Ser	6	19-0	Str.				Wingwall, Vert.
	of 2		19-6					
A641	3	6	18-9	Str.				Wingwall, Vert.
A642	4	6	15-6	Str.				Stem, Vert.
A543	16	5	13-9	158	0-11	7-8	12	Wingwall, Horiz.
A544	3	5	9-6	158	0-11	3-6	12	Wingwall, Horiz.
A545	19	5	6-0	161	2-2	0-9		Wingwall, Horiz
A547	1	5	4-0	108	2-0		11.9	Wingwall
A548	1	5	5-6	108	3-6		11.3	Wingwall

BILL OF REINFORCEMENT

RETAINING WALL (2 REQUIRED)

BAR	NO.	SIZE	LENGTH	TYPE	DIMENSIONS A	B	C	LOCATION
W701	2 Ser	7	5-6	STR.				Footing, Trans.
	of 44		9-5					
W703	2	7	9-6	STR.				Footing, Trans.
W605	12	6	43-6	STR.				Footing, Long.
W606	10	6	25-0	STR.				Footing, Long.
W507	8	5	23-8	STR.				Wall, Horiz.
W508	2 Ser	5	2-0	STR.				Wall, Horiz.
	of 8		21-3					
W509	24	5	19-8	STR.				Wall, Horiz.
W510	2 Ser	5	2-0	STR.				Wall, Horiz.
	of 6		19-0					
W511	2 Ser	5	3-9	STR.				Wall, Vert.
	of 24		11-6					
W512	2	5	11-9	STR.				Wall, Vert.
W713	1 Ser	7	12-0	STR.				Wall, Vert.
	of 20		18-6					
W514	1 Ser	5	12-0	STR.				Wall, Vert.
	of 20		18-9					
W715	1 Ser	7	15-0	STR.				Wall, Vert.
	of 11		18-9					
W516	19	5	13-6	186	0-11	3-0	2	Wall, Horiz.
W517	43	5	4-9	104	1-0	3-9		Footing, Dowel
W718	34	7	5-0	104	1-3	3-9		Footing, Dowel
W721	1 Ser	7	18-0	STR.				Wall, Vert.
	of 3		18-9					
W525	19	5	4-9	180	2-2	0-7		Wall, Horiz.
W726	2	7	19-3	STR.				Wall, Vert.
W527	1	5	18-9	STR.				Wall, Vert.
W529	2	5	25-0	STR.				Wall
W530	2	5	20-10	STR.				Wall
W531	44	5	5-8	105	1-8	2-0		Wall

BILL OF REINFORCEMENT

PIER

BAR	NO.	SIZE	LENGTH	TYPE	DIMENSIONS A	B	C	LOCATION
P1101	36	11	40-0	str.				Footing
P702	82	7	13-0	str.				Footing
P404	2	4	508-6	123	15-10	4-8	6	Column
P805	36	8	15-10	str.				Column
P806	36	8	4-10	104	1-4	3-6		Footing Dowels
P507	2	5	8-6	105	4-6	2-0		Column
P508	2	5	8-0	105	4-0	2-0		Column

COMPUTED PILE LOAD - TONS PER PILE

LOCATION	DEAD LOAD	LIVE LOAD	OVERTURNING	TOTAL
CASE I				
South Abut. 1	13.1	4.8	1.1	19.0
Pier 2	10.3	9.3	0	19.6
North Abut. 3	13.1	4.8	1.1	19.0
CASE II				
South Abut. 1	13.1	4.8	2.4	20.3
Pier 2	10.3	9.3	4.4	24.0
North Abut. 3	13.1	4.8	2.4	20.3

Case I: Dead Load, Live Load and Earth Pressure

Case II: Dead Load, Live Load, Wind, Earth Pressure and Live Load Thrust

BAR BENDING DIAGRAMS

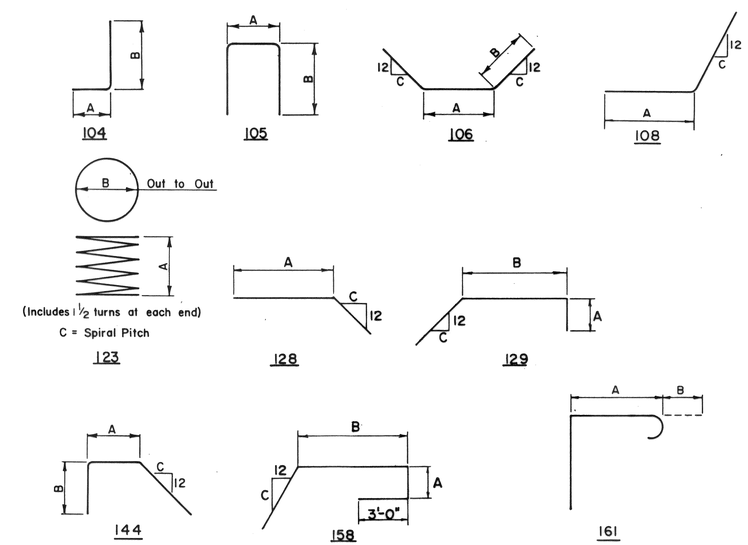

BURLINGTON NORTHERN

BRIDGE OVER AXTON ROAD

FERNDALE, WASHINGTON

BILL OF REINFORCEMENT

HOWARD NEEDLES TAMMEN & BERGENDOFF HNTB

DATE 4-29-77
MADE DRW
CHECKED DRA

SHEET 7 OF 20

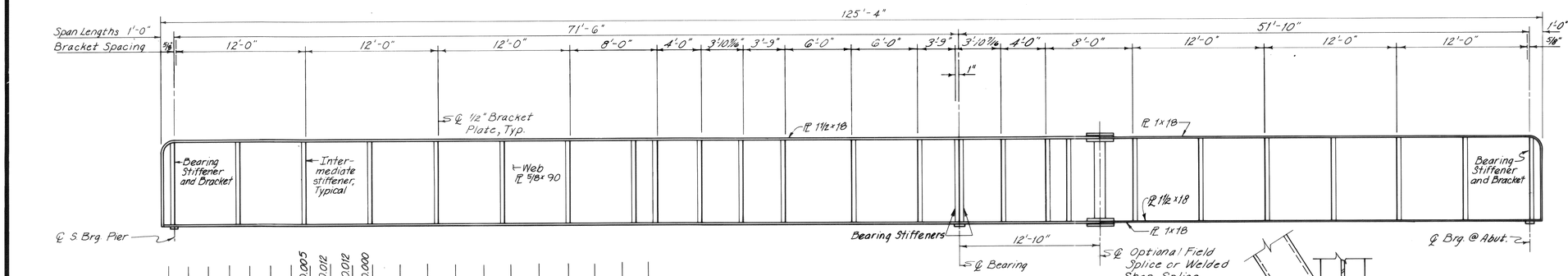

ELEVATION - WEST GIRDER
(East Girder Similar by Rotation)
Scale: 3/16" = 1'-0"

Note: Floor beams and lateral connections not shown on girder elevation

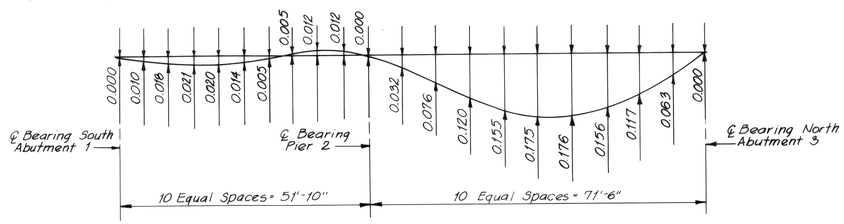

Note: Deflections shown are given in inches

DEAD LOAD DEFLECTIONS DIAGRAM
No Scale

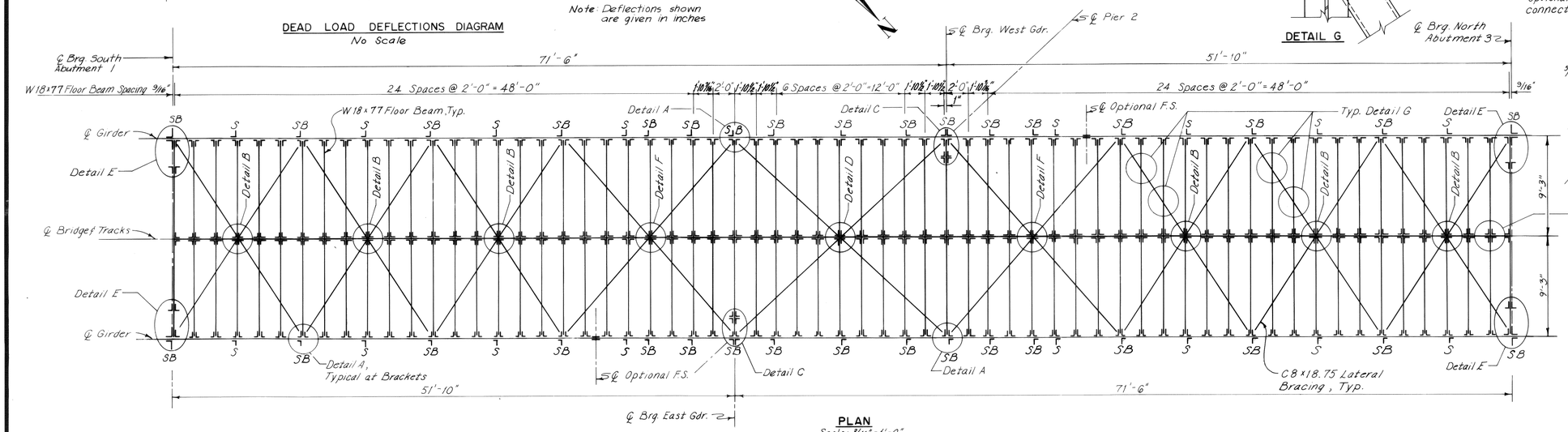

PLAN
Scale: 3/16" = 1'-0"

Note: "SB" indicates stiffener and floor beam bracket
"S" indicates stiffener
For details of SB and Bearing stiffeners and intermediate floor beam connections see sheet No. 9.

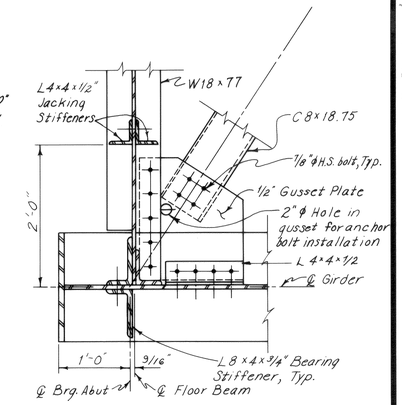

DETAIL E

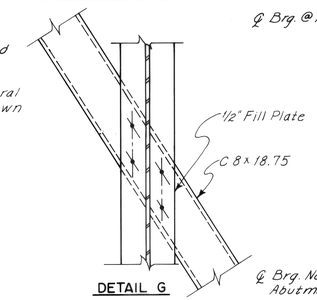

DETAIL G

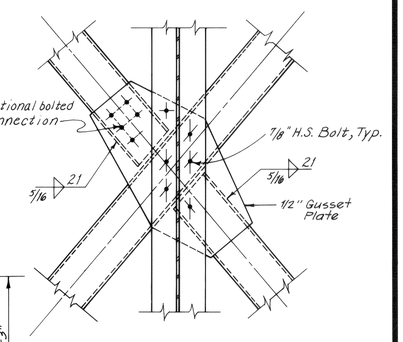

DETAIL F

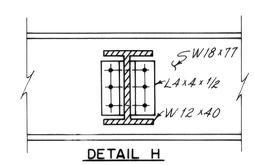

DETAIL H

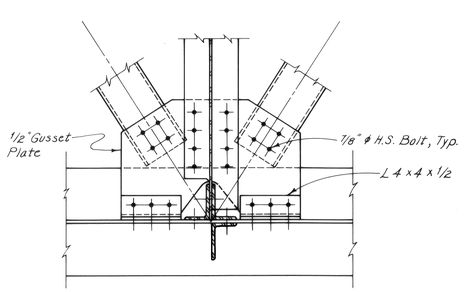

DETAIL A

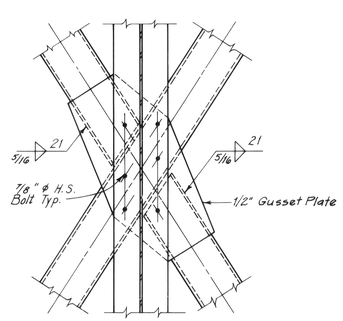

DETAIL B

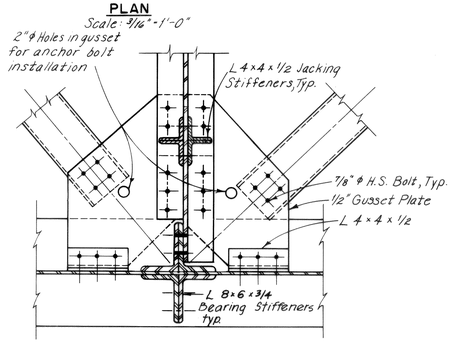

DETAIL C

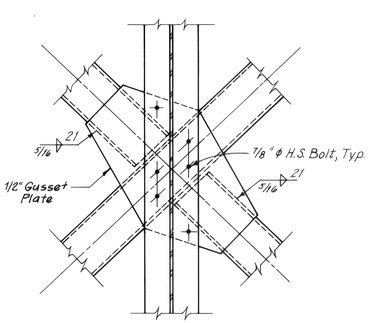

DETAIL D

BURLINGTON NORTHERN

BRIDGE OVER AXTON ROAD
FERNDALE, WASHINGTON

FRAMING PLAN AND GIRDER DETAILS

HOWARD NEEDLES TAMMEN & BERGENDOFF **HNTB**

DATE 4-29-77
MADE REO
CHECKED ROC

SHEET 8 OF 20

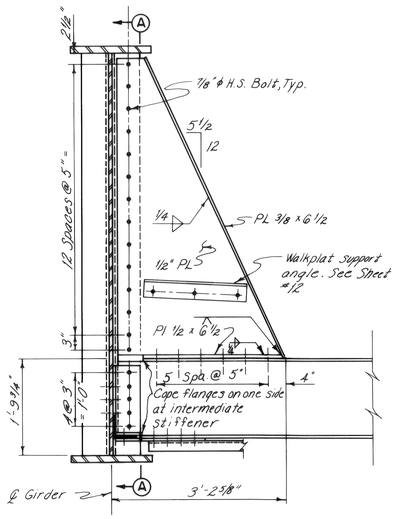

BRACKET DETAIL
Scale: 3/4" = 1'-0"

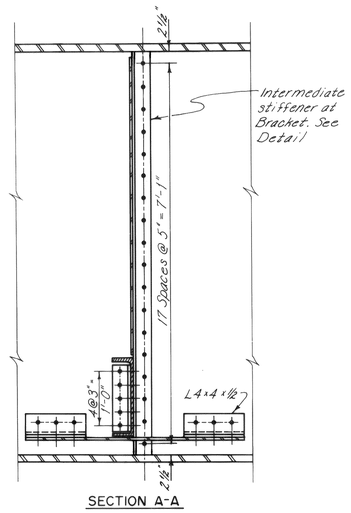

SECTION A-A

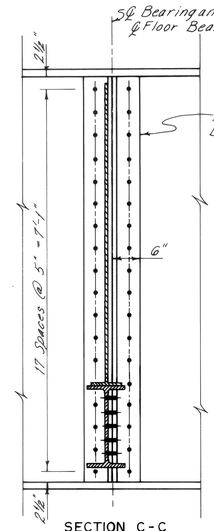

SECTION C-C
Scale: 3/4" = 1'-0"

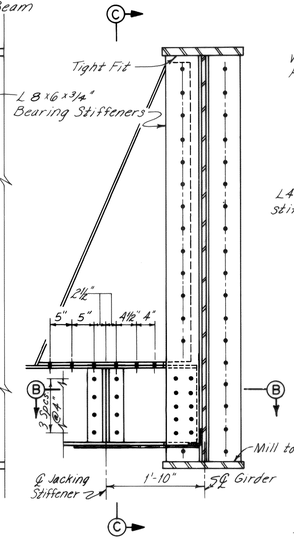

BEARING STIFFENER AND FLOOR BEAM CONNECTION AT PIERS
Scale: 3/4" = 1'-0" @ Pier #2 Bearing

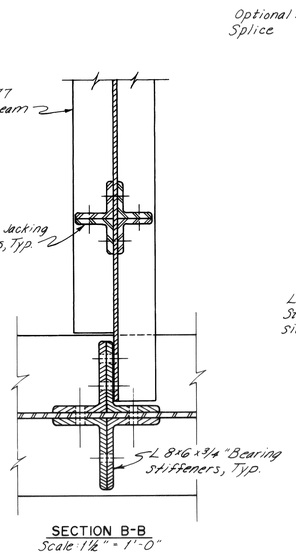

SECTION B-B
Scale: 1 1/2" = 1'-0"

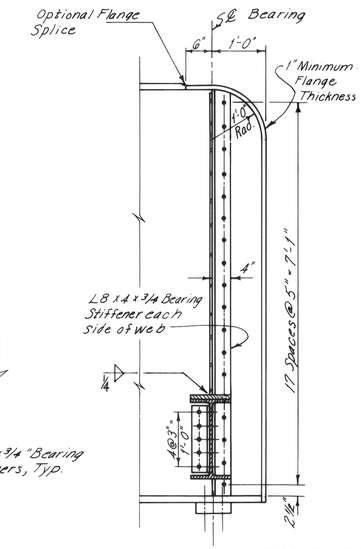

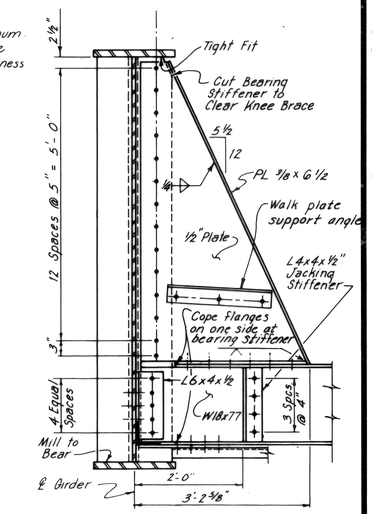

BEARING STIFFENER AT ABUTMENTS
Scale: 3/4" = 1'-0"

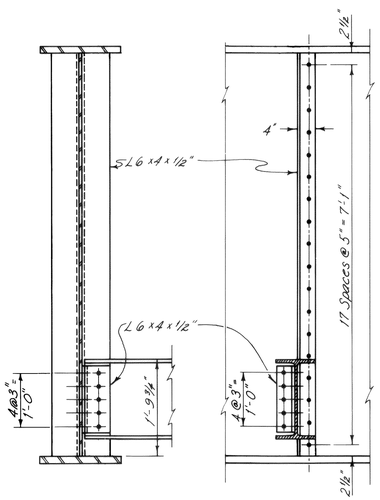

INTERMEDIATE STIFFENER
Scale: 3/4" = 1'-0"

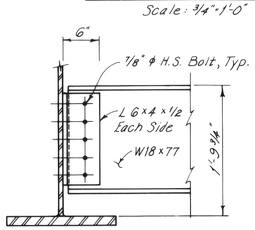

INTERMEDIATE FLOOR BEAM CONNECTION
Scale: 1" = 1'-0"

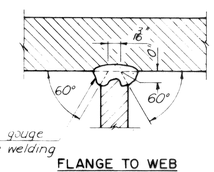

FLANGE TO WEB WELD DETAIL

All connections of girder flanges to webs shall be shop welded using submerged and automatic welding process.

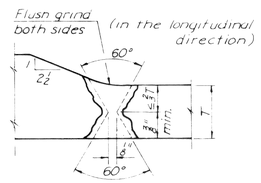

FLANGE SPLICE
(B-U3b-S)

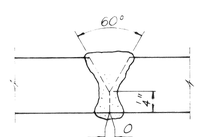

Weld after welding at least one pass on other side.

WEB SPLICE

Note: If web splice is used, it shall be placed a minimum of 1'-0" from any flange splice.

WELDED SHOP SPLICE

All shop web splices shall be ground flush on the exterior face of the girder.
Flange plate shop splice welds shall be ground flush in the longitudinal direction.

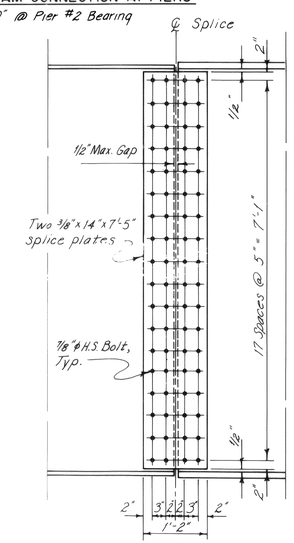

WEB SPLICE DETAIL
Scale: 3/4" = 1'-0"

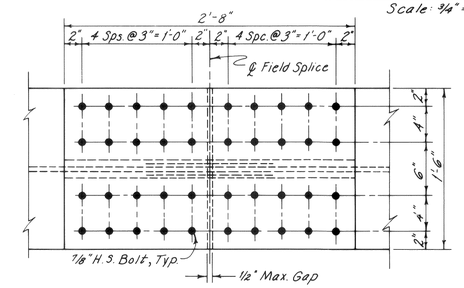

FLANGE SPLICE PLAN
Scale: 1 1/2" = 1'-0"

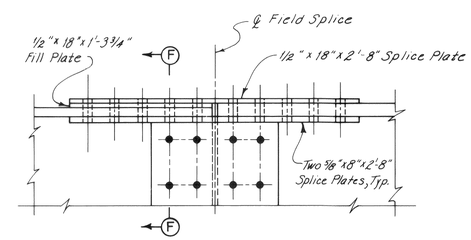

FLANGE SPLICE ELEVATION
Scale: 1 1/2" = 1'-0"

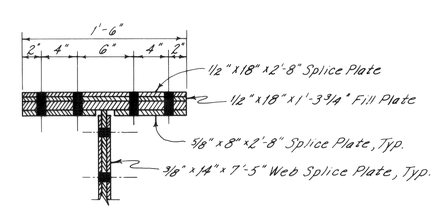

SECTION F-F
Scale: 1 1/2" = 1'-0"

BURLINGTON NORTHERN

BRIDGE OVER AXTON ROAD
FERNDALE, WASHINGTON

MISCELLANEOUS STEEL DETAILS

HOWARD NEEDLES TAMMEN & BERGENDOFF HNTB

DATE 4-29-77
MADE REO
CHECKED ROC

SHEET 9 OF 20

00171.010 2-8-06 MJ

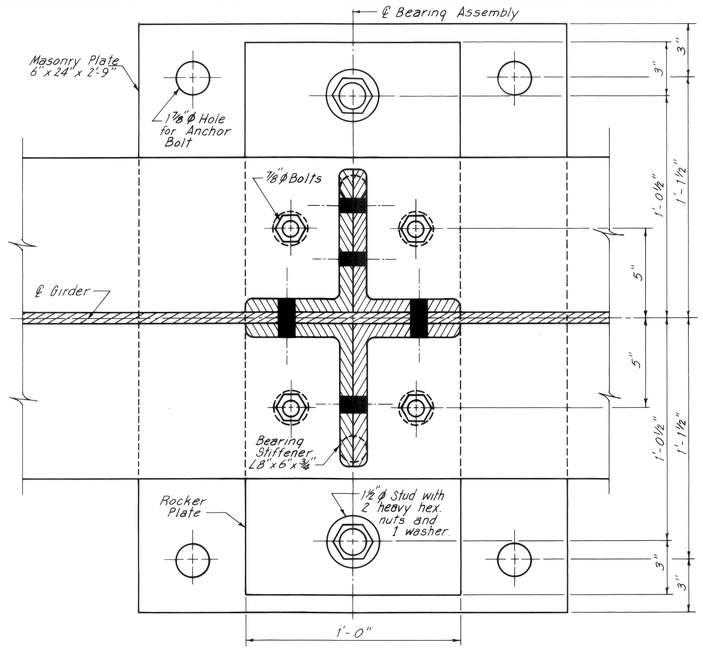

PLAN

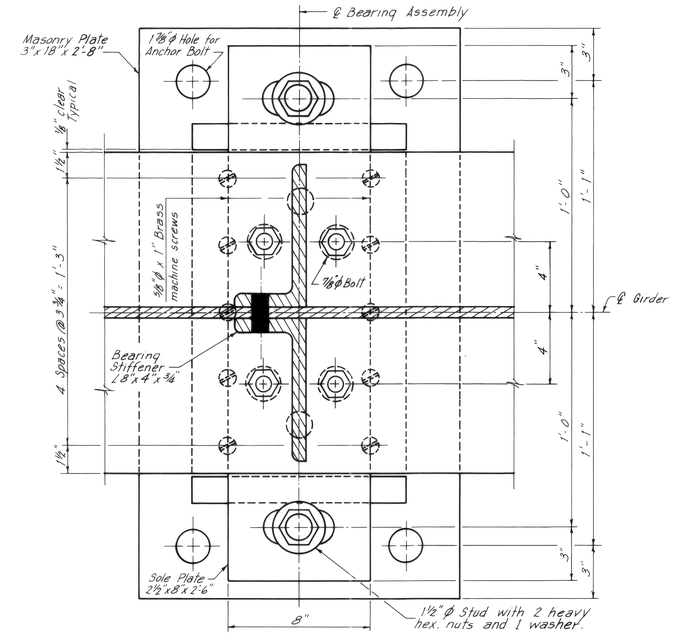

PLAN

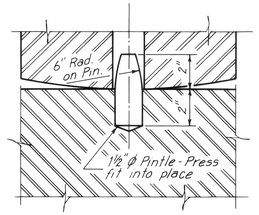

PINTLE DETAIL

Scale: 3" = 1'-0"

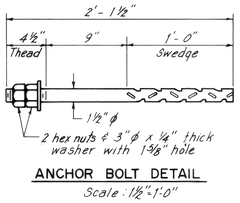

ANCHOR BOLT DETAIL

Scale: 1½" = 1'-0"

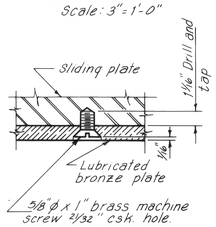

MACHINE SCREW DETAIL

No Scale

SHOE NOTES:

Holes for anchor bolts shall be drilled into the concrete and anchor bolts set with an epoxy sand grout: see Special Provisions.

Swedged anchor bolts and nuts shall conform to the requirements of A.S.T.M. A307, Grade A. Anchor bolts, nuts and washers shall be galvanized.

Tie-down studs shall conform to the requirements of A.S.T.M. A490

All masonry plates, shim plates, rocker plates and guide plates shall be structural steel, A.S.T.M. Designation A588.

Pintles are to be cold finished alloy bar steel A.S.T.M. Designation A331. (Grade AISI A41L40 or 41L42).

All bearing assemblies for steel girders including bronze plates and anchor bolts will be included in the weight and paid for as Structural Low Alloy Steel.

All anchor bolts shall be furnished with 2 hexagon nuts and 1 plain washer.

Provide lead plates under the bearings which shall be approximately ⅛" in thickness and weigh 8 lbs per sq. ft. Fill space around anchor bolts with molten zinc. Cost of lead and zinc shall be included in price bid for other items.

Provide ⅛" clearance between washers and double nuts of tie-down studs.

All bearing assembly steel including bolts and anchor bolts to be galvanized in accordance with A.S.T.M. A123.

Bearing assemblies to be adjusted as required so as to be in their normal vertical position at 60°F.

Drilling and grouting of anchor bolts shall be considered incidental and included in price bid for other items.

For Lubricated Bronze Plate see Special Provisions.

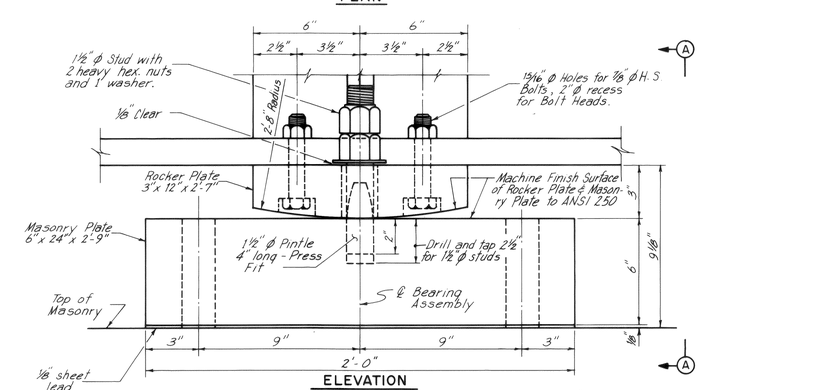

ELEVATION

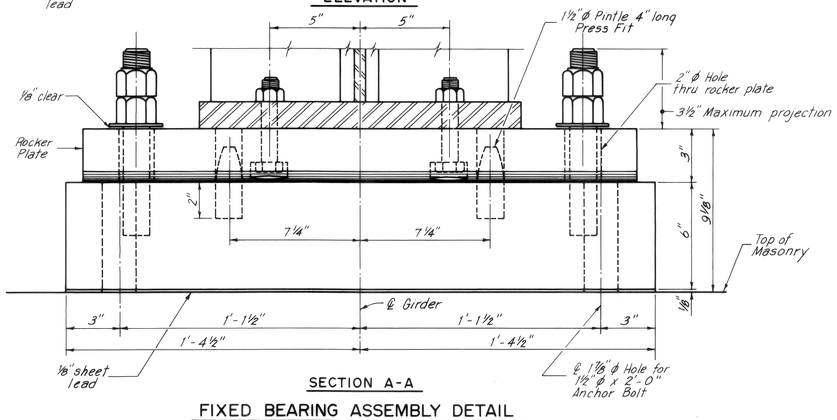

SECTION A-A

FIXED BEARING ASSEMBLY DETAIL

Scale: 3" = 1'-0"

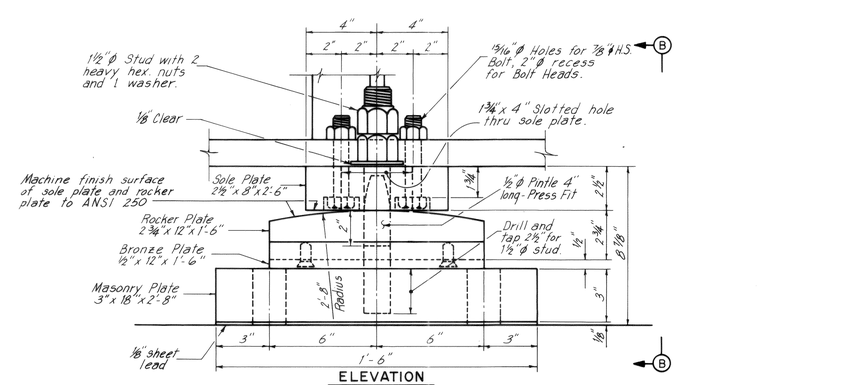

ELEVATION

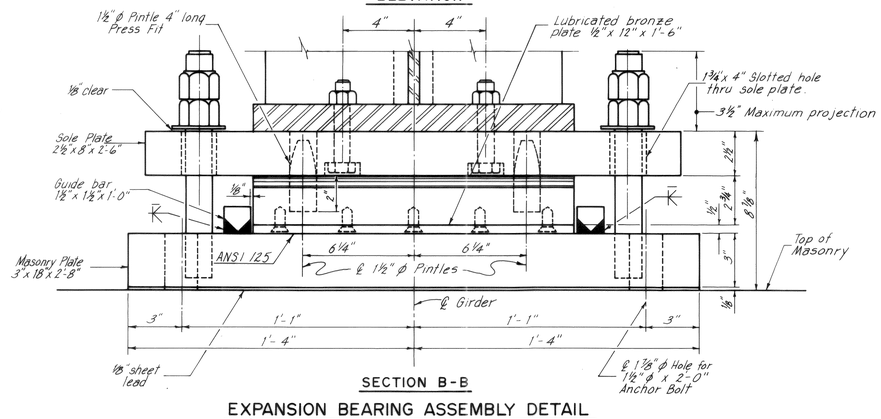

SECTION B-B

EXPANSION BEARING ASSEMBLY DETAIL

Scale: 3" = 1'-0"

BURLINGTON NORTHERN

BRIDGE OVER AXTON ROAD

FERNDALE, WASHINGTON

BEARING ASSEMBLIES

HOWARD NEEDLES TAMMEN & BERGENDOFF HNTB

DATE 4-29-77

MADE KEB

CHECKED DRA

SHEET 10 OF 20

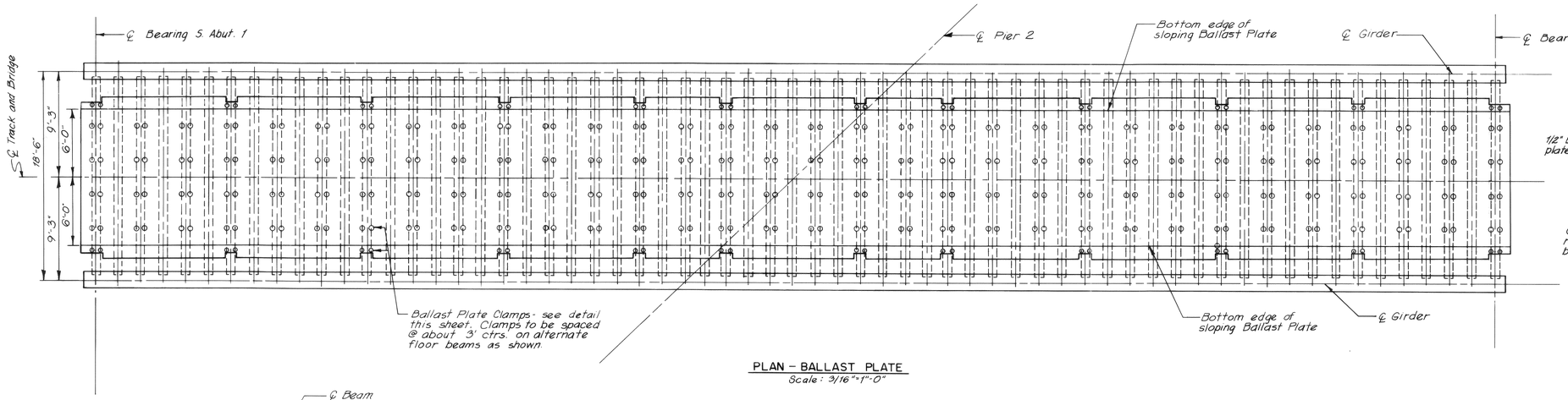

PLAN – BALLAST PLATE
Scale: 3/16"=1'-0"

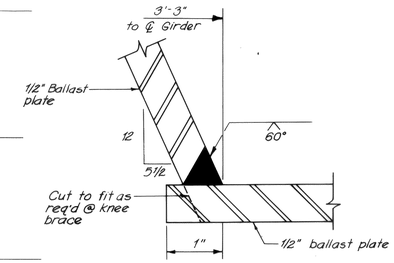

BALLAST PLATE WELD DETAIL
Full Scale

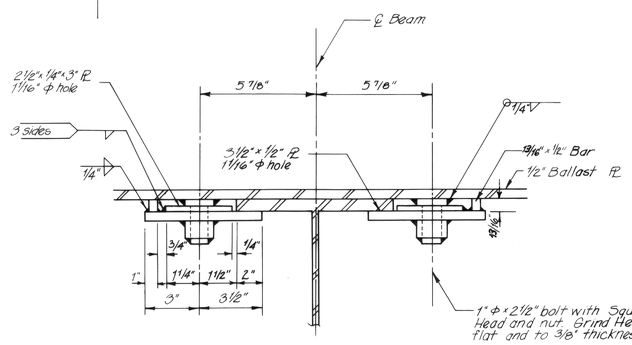

BALLAST PLATE CLAMPS
AT BEAMS

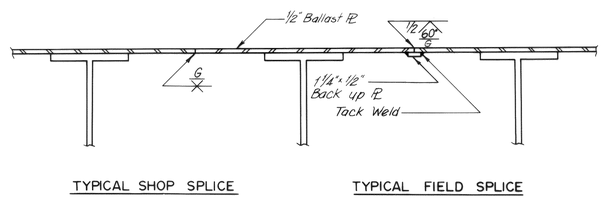

TYPICAL SHOP SPLICE TYPICAL FIELD SPLICE

BALLAST PLATE SPLICES

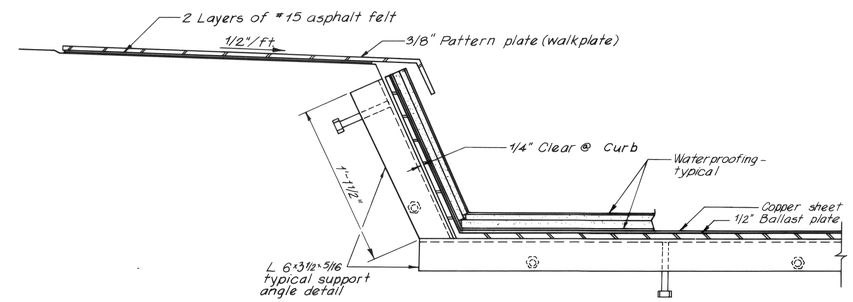

EXPANSION JOINT – SECTION
AT ABUTMENT
No Scale

Note: All A588 and A36 structural steel and copper sheets shall be included in Lump Sum bid for Structural Low Alloy Steel.

All galvanizing shall be considered incidental and included in price bid for other items.

Pattern plates shall have a raised pattern similar to Inland Steel Company's large pattern or U.S. Steel Section S-300.

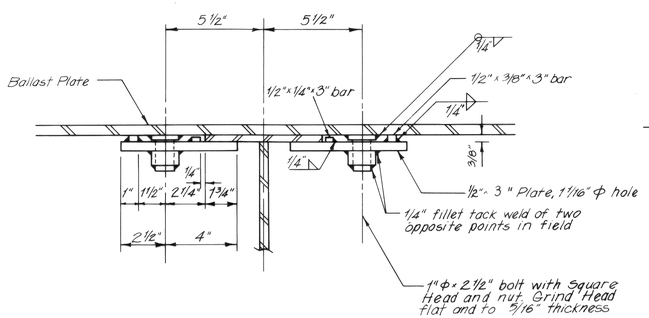

BALLAST PLATE CLAMPS
AT KNEE BRACE
Scale: 3"= 1'-0"

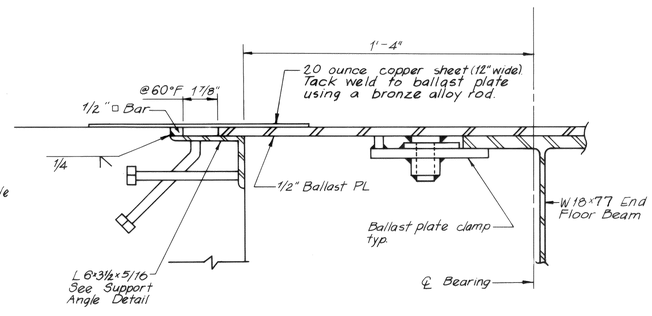

DETAIL OF EXPANSION
JOINT AT ABUTMENT
Scale: 3"=1'-0"

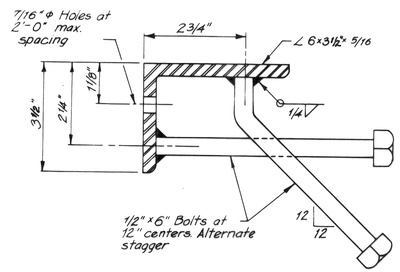

SUPPORT ANGLE DETAIL
FOR EXPANSION JOINTS
Scale: Half scale

BURLINGTON NORTHERN

BRIDGE OVER AXTON ROAD
FERNDALE, WASHINGTON

BALLAST PLATE

HOWARD NEEDLES TAMMEN & BERGENDOFF HNTB

DATE 4-29-77
MADE KRM
CHECKED DRA

SHEET 11 OF 20

0017.012 2-8-06 KR

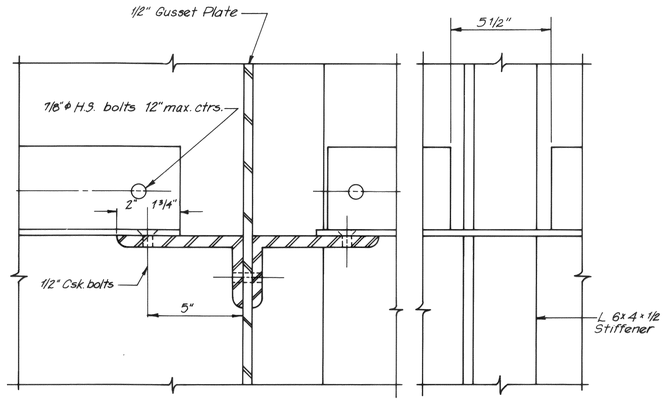

SECTION AA

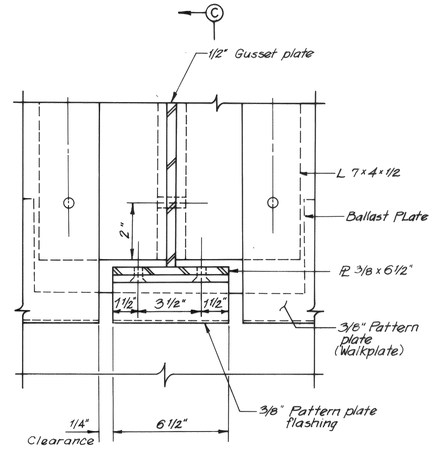

PLAN

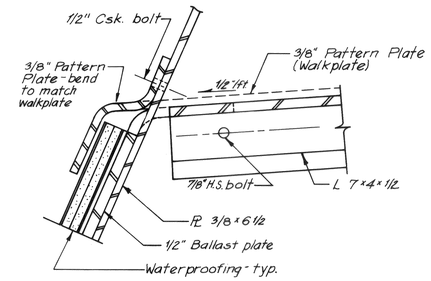

SECTION CC

FLASHING PLATE DETAIL
Scale: 3" = 1'-0"

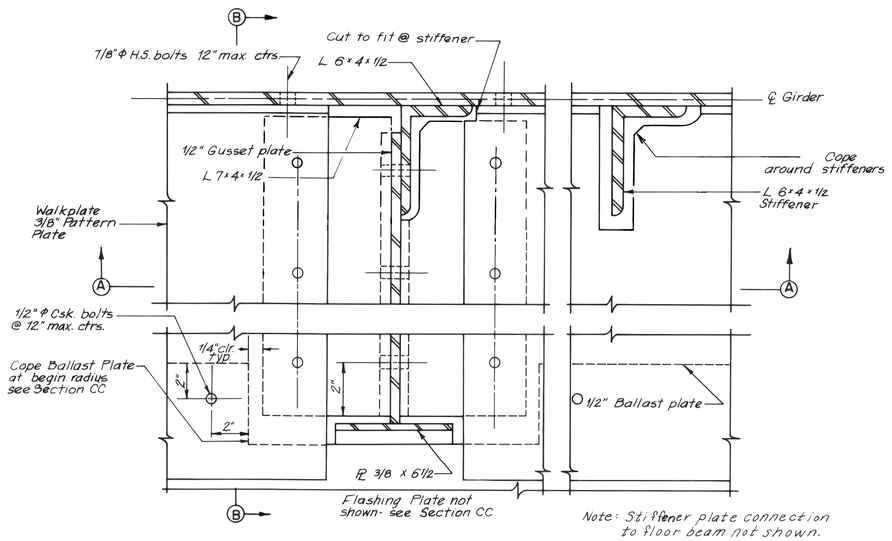

PLAN

WALKWAY DETAILS
Scale: 3" = 1'-0"

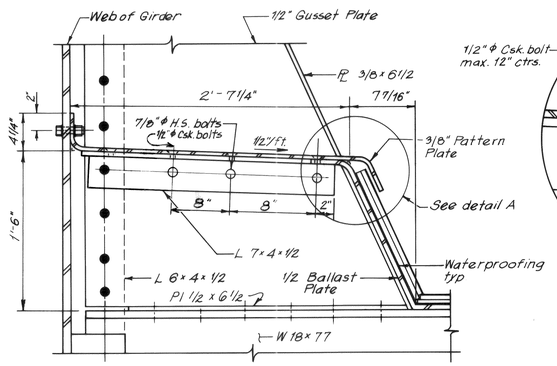

SECTION BB
Scale: 1 1/2" = 1'-0"

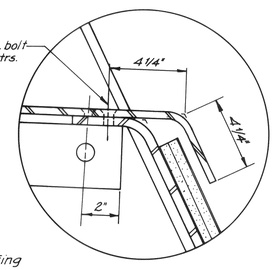

DETAIL A

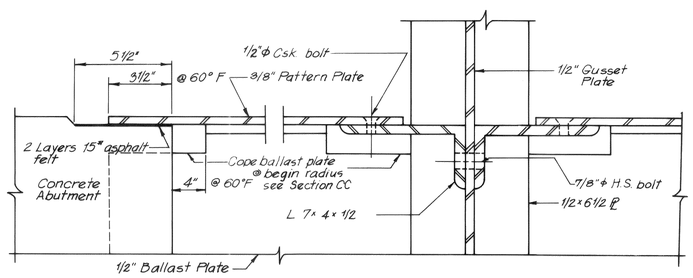

SECTION AT EXPANSION JOINT
Scale: 3" = 1'-0"

BURLINGTON NORTHERN

BRIDGE OVER AXTON ROAD
FERNDALE, WASHINGTON

WALKPLATE DETAILS

HOWARD NEEDLES TAMMEN & BERGENDOFF **HNTB**

DATE 4-29-77
MADE KRM
CHECKED DRA

SHEET 12 OF 20

00171.012 28.06 Kre

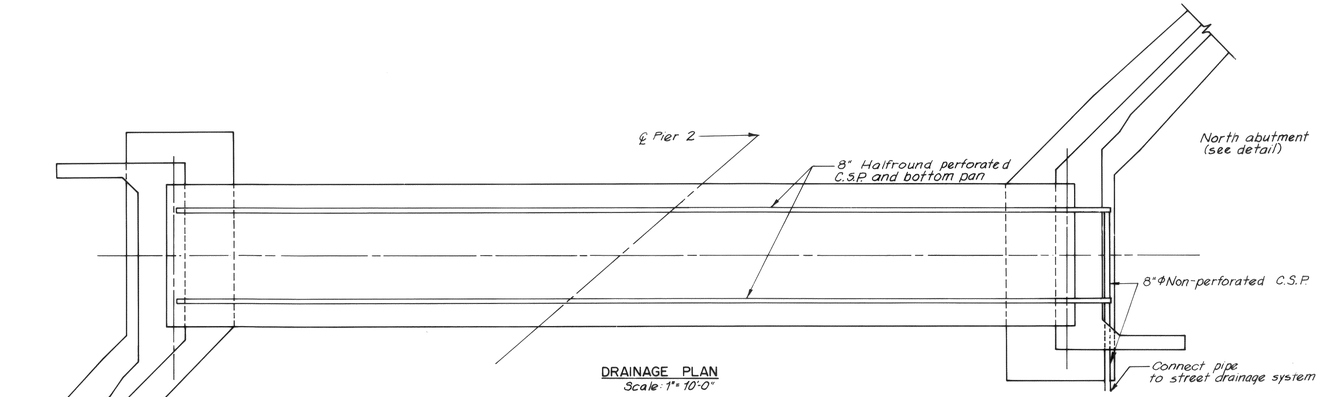

DRAINAGE PLAN
Scale: 1" = 10'-0"

QUANTITY SUMMARY FOR DRAINAGE SYSTEM		
ITEM	UNIT	QUANTITY
8" Φ Half-Round C.S.P.	Lin. Ft.	256
6" Φ C.S.P.	Lin. Ft.	32
* 8" Φ C.S.P.	Lin. Ft.	50
Bottom Pan	Lin. Ft.	256
Tee Connection	Unit	1
Pipe Clamp Assemblies	Unit	6
Collar	Unit	2
End Plate	Unit	4
Reducer	Unit	2

*Quantity shown for 8" Φ C.S.P. is to toe of embankment slope only. Contract to include additional 8" Φ C.S.P. required to connect drainage to underground roadway drainage system.

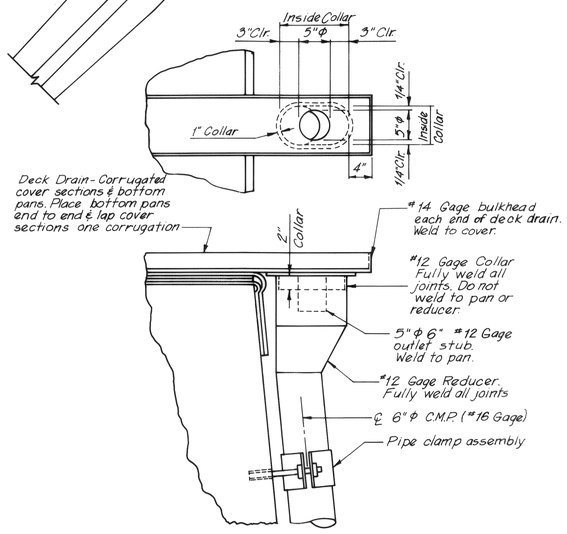

DOWNSPOUT DETAIL
Scale: 1" = 1'-0"

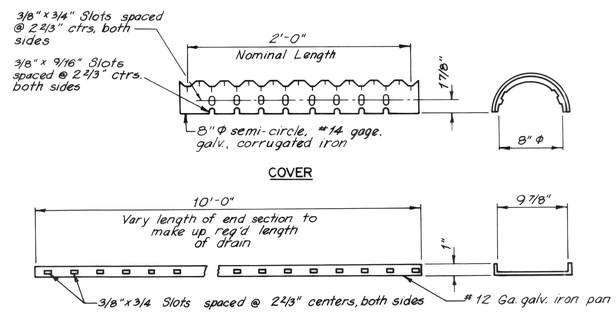

DECK DRAIN DETAILS
No Scale

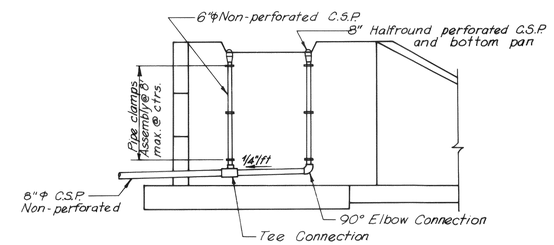

BACK ELEVATION NORTH ABUTMENT
Scale: 1" = 10'-0"

DRAINAGE SYSTEM

Drainage system corrugated metal pipes, reducers, collars, and all necessary connections and fasteners to be galvanized after fabrication. The item "Deck Drainage System" to include all materials required for the complete drainage system including pipe clamps, deck drains, sleeves and all underground pipe behind abutment.

The quantity summary for Drainage System is for the contractors convenience only and price bid for system shall be for the complete system as shown in the plans.

Bottom pans and covers to be fabricated from galvanized material.

Threaded bolt and anchorages to be the Cinch-Anchor Type as manufactured by the National Lead Company, The Rawl-Anchor Type as manufactured by The Rawlplug Co., or approved equal.

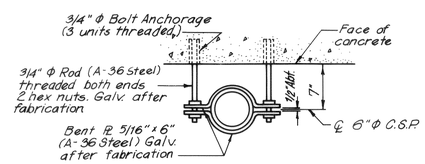

PIPE CLAMP ASSEMBLY
No Scale

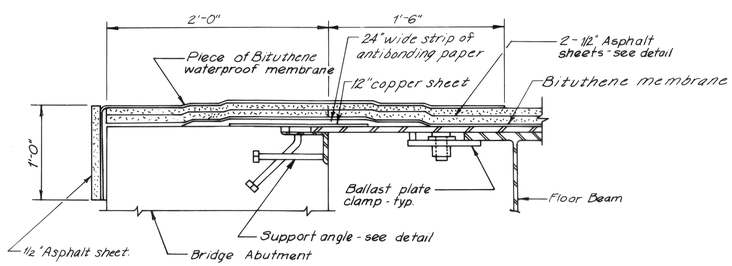

WATERPROOFING AT ABUTMENT
No Scale

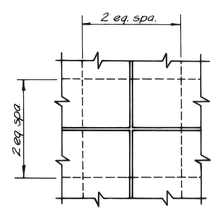

TYPICAL ASPHALT SHEET
PLACEMENT
No Scale

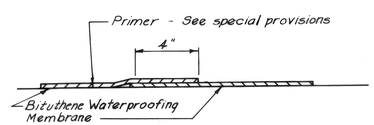

WATERPROOFING MEMBRANE SPLICE DETAIL
No Scale

BURLINGTON NORTHERN

BRIDGE OVER AXTON ROAD
FERNDALE, WASHINGTON

WATERPROOFING AND DRAINAGE

HOWARD NEEDLES TAMMEN & BERGENDOFF HNTB

DATE 4-29-77
MADE KRM
CHECKED DRA

SHEET 13 OF 20

DETAIL A
Scale : 1" = 1'-0"

DETAIL B
Scale : 1" = 1'-0"

RAILING ELEVATION VIEW A-A
Scale : 1/4" = 1'-0"

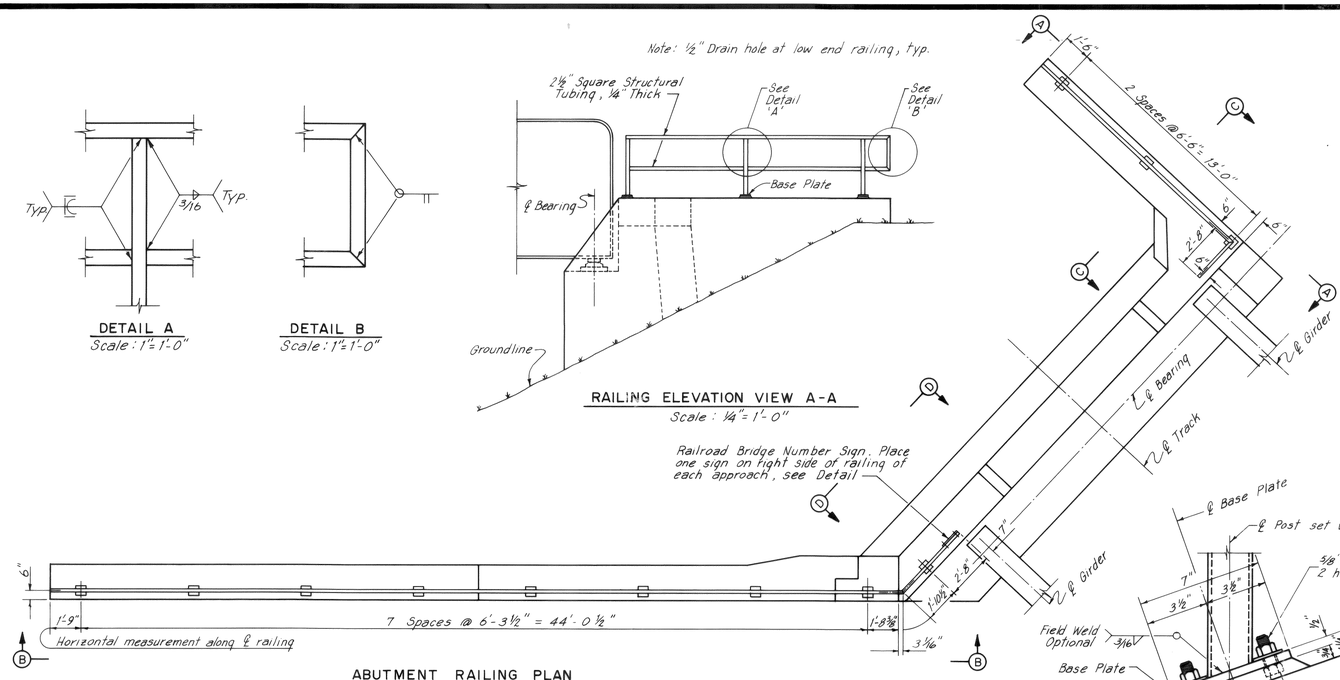

ABUTMENT RAILING PLAN
Scale : 1/4" = 1'-0"

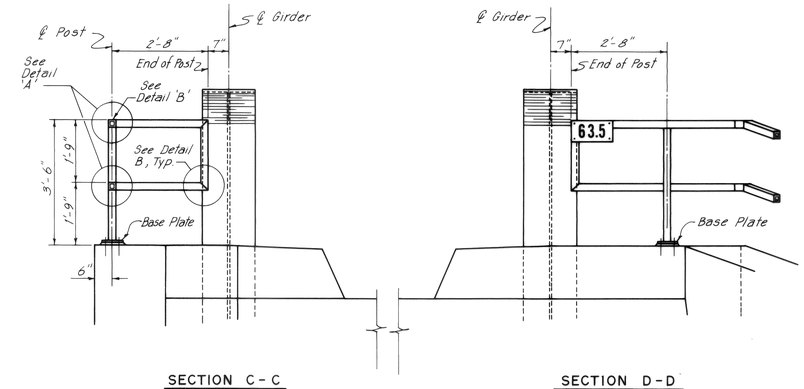

SECTION C-C
Scale : 1/2" = 1'-0"

SECTION D-D
Scale : 1/2" = 1'-0"

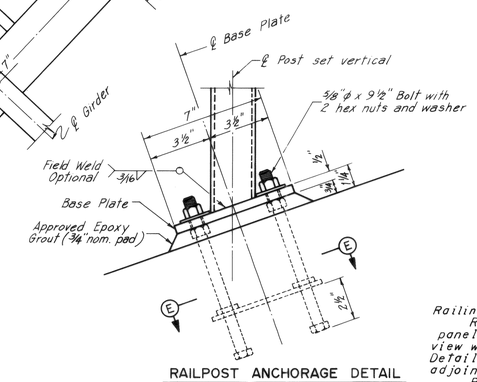

RAILPOST ANCHORAGE DETAIL
Scale : 3" = 1'-0"

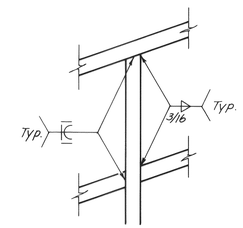

DETAIL E
Scale : 1" = 1'-0"

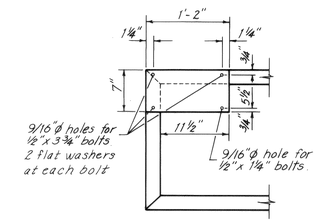

BRIDGE NUMBER SIGN
2 Required

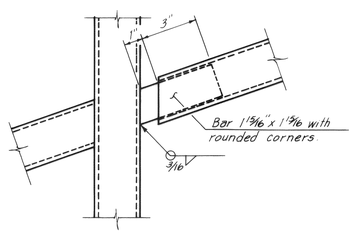

DETAIL C
Scale : 3" = 1'-0"

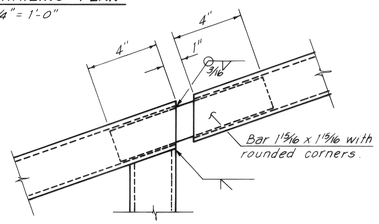

DETAIL D
Scale : 3" = 1'-0"

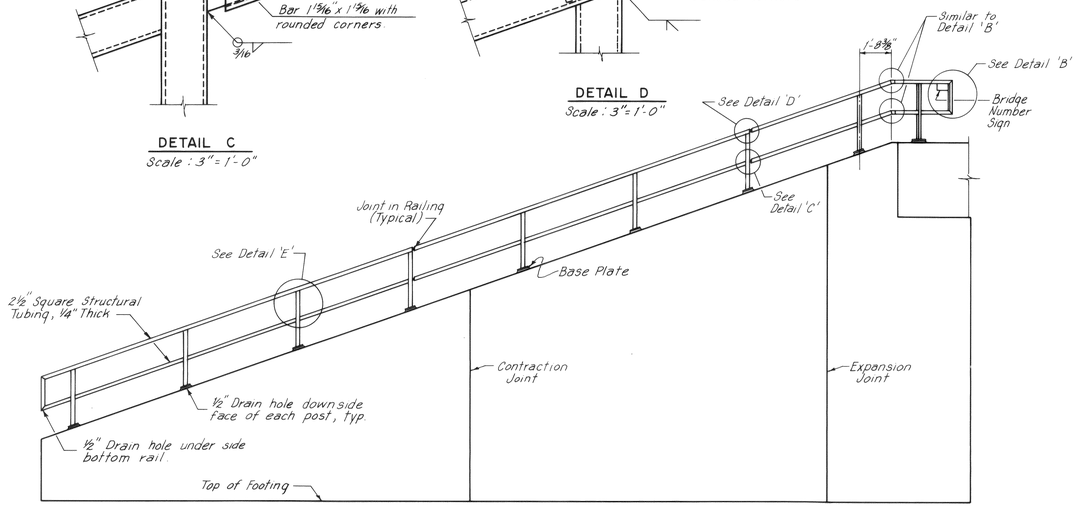

RAILING ELEVATION VIEW B-B
Scale : 1/4" = 1'-0"

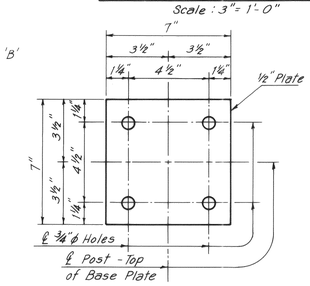

BASE PLATE
Scale : 3" = 1'-0"

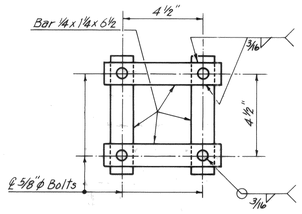

SECTION E-E
Scale : 3" = 1'-0"

Railing Notes:
Railing shall be fabricated in panel lengths as shown in the elevation view with expansion joints as shown in Details C and D provided to connect adjoining fabricated lengths.
Bolts and nuts shall meet the requirements of A.S.T.M. A307.
Materials for base plates, anchor bolt assemblies and rail expansion joints shall conform to structural carbon steel (weldable A36).
All railing & railing anchorage material shall be galvanized in accordance with A.S.T.M. A153 or A123.
Anchorages shall be accurately placed to provide correct alignment of railing.
Adjust railposts as required to provide proper horizontal alignment.
Structural tubing shall conform to A.S.T.M. Designation A500 or A501.
Epoxy grout at railpost anchorages shall be considered incidental and included in price bid for railing.

Note:
Bridge Number Signs are overlays and shall be made of 0.025" thick 61S-T6 sheet aluminum. After degreasing and treatment of aluminum, apply black Scotchal No. 655, or approved equal, to face of sign. Then apply 5" Series "D" U.S. Bureau of Public Roads Administration Standard numerals of wide angle silver No. 2270 Scotchlite, or approved equal. Sign overlay to be bolted with galvanized or cadmium plated bolts to a 4 gage galv. steel plate of same size. All sign brackets, nuts, bolts and washers, to be galvanized after fabrication.

Note:
For alternate railing materials see Special Provisions.

BURLINGTON NORTHERN

BRIDGE OVER AXTON ROAD
FERNDALE, WASHINGTON

RAILING DETAILS

HOWARD NEEDLES TAMMEN & BERGENDOFF HNTB

DATE 4-29-77
MADE KEB
CHECKED DRN

SHEET 14 OF 20

00171.015 2-8-06 KR

INT	DATE	DWG	ENG

1. 38 + 34 (RT) Const. Type A-1 concrete curb and gutter to 1 + 11 (32' RT). (Hov. Rd.)
2. 38 + 38 (LT) Const. Type A-1 concrete curb and gutter to 42 + 10.
4. 39 + 72 (RT) Const. asphalt D/W 40' wide. Construct asphalt drive to approx. 28' RT.
6. 39 + 53 (28' LT) to 44 + 80 (6' LT) Install approx. 530' of 12" dia. D.I. water main. Remove existing 8" dia. water main.
7. 39 + 65 to 41 + 96. Painted channelization by others.
8. 39 + 96 (LT) Const. asphalt D/W 40' wide. Reconstruct asphalt drive to approx. 36' LT.
9. 40 + 16 (LT) Const. cement concrete combined walk curb and gutter Type A-1 to 41 + 49.
10. 40 + 62 (CL) Adjust existing MH to grade.
11. Construct bridge abutment and retaining wall.
12. Remove existing bridge and abutments.
13. 40 + 90 (26.5' LT) Const. Type I CB inlet. Connect to CB at 41 + 25 (26.5' LT) with 12" x 35' conc. pipe.
14. 41 + 08 (11' LT) Install 12" x 10" x 12" D.I. tee and 10" gate valve.
15. Not used.
16. 40 + 74 (12' RT) Construct Type I-48 MH. Connect to MH at 40 + 62 (CL) with 21" x 19' conc. pipe. Remove existing 8" pipe to MH at 40 + 62 (CL). Construct 8" x 200' Conc. Pipe Stub to East and Plug End.
17. 40 + 89 Remove existing culvert pipe.
18. 40 + 90 (49' RT) Const. Type I CB with Type 46 inlet. Connect to CB at 40 + 90 (26.5' LT) with 12" x 76' conc. pipe.
19. 41 + 08 Install approx. 190' of 10" dia. D.I. water main.
20. 1 + 01 (17' RT) (Hov. Rd.) Remove existing CB and connecting pipe.
21. 1 + 05 (14.7' RT) (Hov. Rd.) Relocate existing mail box standard.
22. Not used.
23. 1 + 57 (22' RT) (Hov. Rd.) Construct Type I CB inlet with 15" x 12' concrete pipe stub. Connect to CB at 1 + 31 (23' LT) (Hov. Rd.) with 15" x 52' conc. pipe.
24. 1 + 31 (23' LT) (Hov. Rd.) Construct Type I CB inlet with 12" x 12' concrete pipe stub. Connect to CB at 41 + 75 (26' LT) with 15" x 46' conc. pipe.
25. 41 + 37 (22' RT) Remove existing CB and connecting pipe.
26. 41 + 26 (CL to 20' RT) Install 6" x 20' perf. drain pipe. Connect to 6" perf. drain pipe 20' RT.
27. 41 + 26 (CL to 20' LT) Install 6" x 20' perf. drain pipe. Connect to 6" perf. drain pipe 20' LT.
28. 41 + 25 (26.5' LT) Construct Type II CB with Type 46 inlet. Connect to pump station at 41 + 30 (36' LT) with 21" x 7' conc. pipe.
29. 41 + 30 (36' LT) Construct pump station (see Sheets 18 and 20.) Connect to MH at 41 + 31 (75' LT) with 12" x 38' ductile iron pipe force main.
30. 41 + 31 (75' LT) Construct Type I-48 MH. Remove existing pipe to south.
31. 41 + 84 (LT) Construct asphalt D/W 40' wide. Construct asphalt drive to approx. 70' LT.
32. 41 + 75 (26' LT) Construct Type II CB inlet. Connect to CB at 41 + 25 (26.5' LT) with 21" x 50' conc. pipe.
33. 41 + 66 (20' LT) Construct subdrain service pipe. Connect to CB at 41 + 75 (26' LT) with 6" x 11' perf. drain pipe. Install 6" x 80' perf. drain pipe to 40 + 86 (20' LT). Install 6" x 80' perf. drain pipe to 42 + 46 (20' LT). Install 6" x 13' perf. drain pipe to 41 + 66 (7' LT).
34. 41 + 84 (24' LT) Remove existing MH and connecting pipe.
35. 41 + 10 to 41 + 92 (CL) Const. conc. median barrier.
36. 41 + 61 (12' RT) Construct Type III-48 MH. Connect to MH at 40 + 74 (12' RT) with 20" x 87' D.I. pipe.
37. 41 + 66 (20' RT) Construct subdrain service pit. Connect to CB at 41 + 75 (26' RT) with 6" x 11' perf. drain pipe. Install 6" x 80' perf. drain pipe to 40 + 86 (20' RT). Install 6" x 80' perf. drain pipe to 42 + 46 (20' RT). Install 6" x 13' perf. drain pipe to 41 + 66 (7' RT).
38. 1 + 16.25 (LT) (Hov. Rd.) Const. cement conc. combined walk, curb and gutter Type A-1 to 42 + 55.
39. 41 + 75 (26' RT) Construct Type II CB with Type 46 inlet. Connect to CB at 41 + 75 (26' LT) with 18" x 52' conc. pipe.
40. Construct bridge abutment and retaining wall.
41. 42 + 06 (CL to 20' RT) Install 6" x 20' perf. drain pipe. Connect to 6" perf. drain pipe 20' RT.
42. 42 + 06 (CL to 20' LT) Install 6" x 20' perf. drain pipe. Connect to 6" perf. drain pipe 20' LT.
43. 42 + 10 (25.6' LT) Const. asphalt wedge curb to 45 + 00 (18' LT).
44. 42 + 23 (1' LT) Adjust existing manhole to grade. Connect to MH at 41 + 61 (12' RT) with 21" x 64' conc. pipe. Remove existing pipe to 40 + 62.
45. 1 + 53 (25' RT) (Hov. Rd.) Replace existing 4" hydrant and gate valve with new 6" hydrant and gate valve. Connect to main with 10" M.J. x 6" Flg. x 10" M.J. tee and 6" x 15' D.I. pipe.

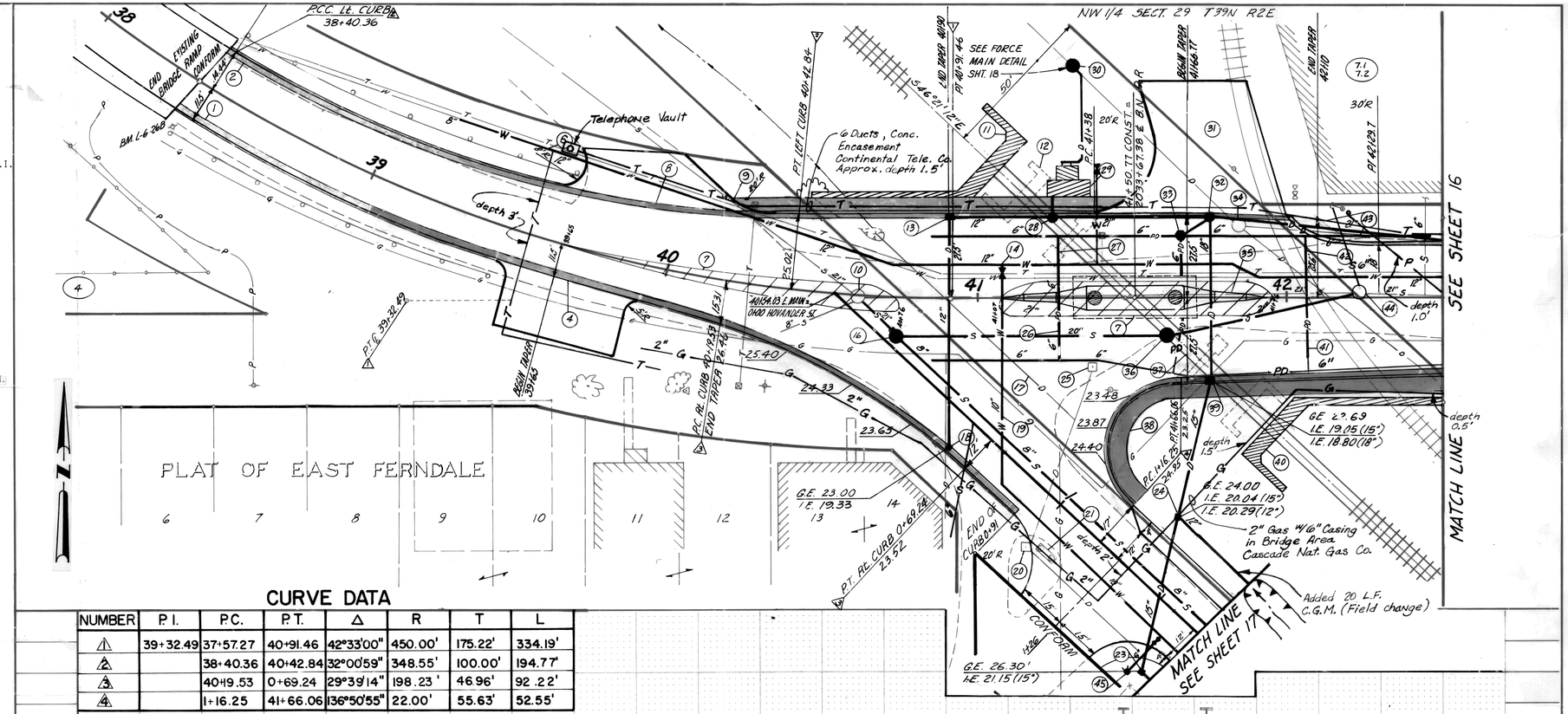

CURVE DATA

NUMBER	P.I.	P.C.	P.T.	Δ	R	T	L
1	39+32.49	37+57.27	40+91.46	42°33'00"	450.00'	175.22'	334.19'
2		38+40.36	40+42.84	32°00'59"	348.55'	100.00'	194.77'
3		40+19.53	0+69.24	29°39'14"	198.23'	46.96'	92.22'
4		1+16.25	41+66.06	136°50'55"	22.00'	55.63'	52.55'

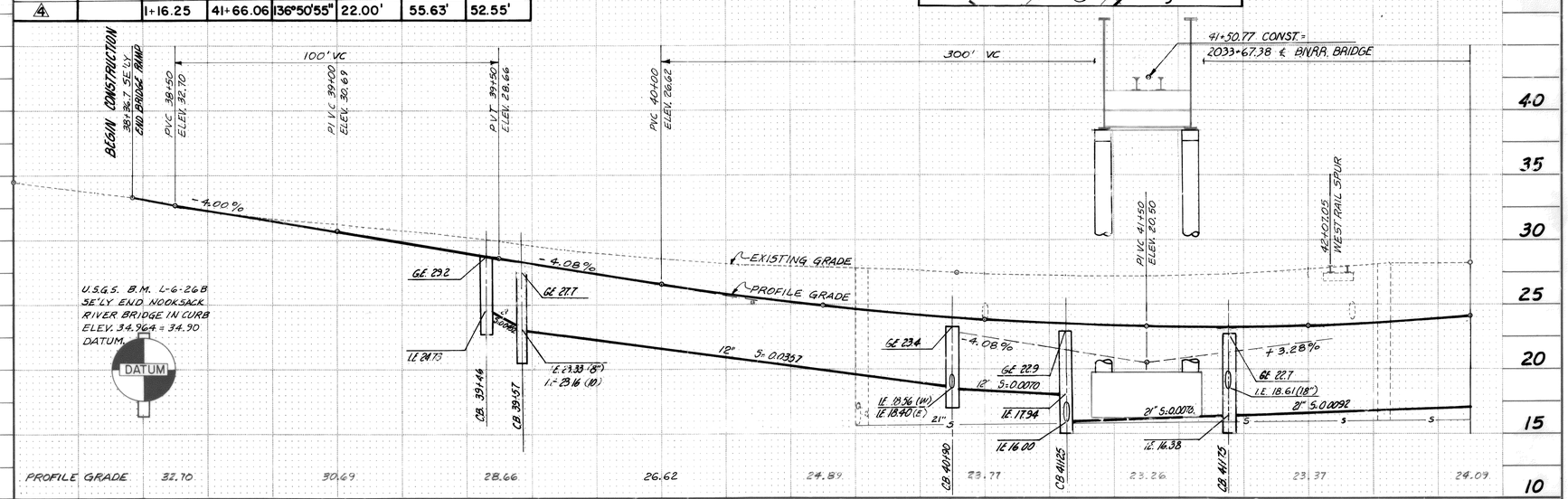

No.	Date	By	Ckd.	Appr.	Revision
3	6/14/79	JWM	JWM		Stub Sewer Revision on Hovander
2	5/30/79	JWM	JWM		Deleted Const. Notes ③ & ⑤ (CB's 1/2" Conc. Pipe)
1	5/24/79	PM	RHS		Added curb grades, Changed curve data, curves 2 & 3. Deleted curb return Sta. 0+91 Hov. Rd.

ALEX J. REDECKER — STATE OF WASHINGTON — REGISTERED PROFESSIONAL ENGINEER

RODNEY H. SCHRUNGHOF — STATE OF WASHINGTON — REGISTERED PROFESSIONAL ENGINEER

Approved By:

Drawn By: RMB	Date 9-76	
Designed By: RS	9-76	
Checked By: R.S.	12-77	
Approved By: AJR	12-77	

ENTRANCO Engineers
ENVIRONMENTAL AND TRANSPORTATION CONSULTANTS

Scale: Horiz. 1" = 20' Vert. 1" = 5'
Job No.: B-5045-31

TOWN OF FERNDALE, WA.
EAST MAIN STREET
RAILROAD UNDERPASS IMPROVEMENT
STA. 38+36 TO STA. 42+50
PLAN & PROFILE

Sheet 15 Of 20
File No.: UAB 8-2-158(1)

00171.016 2-8-06 KE

INT.	DATE	DWG	ENG.

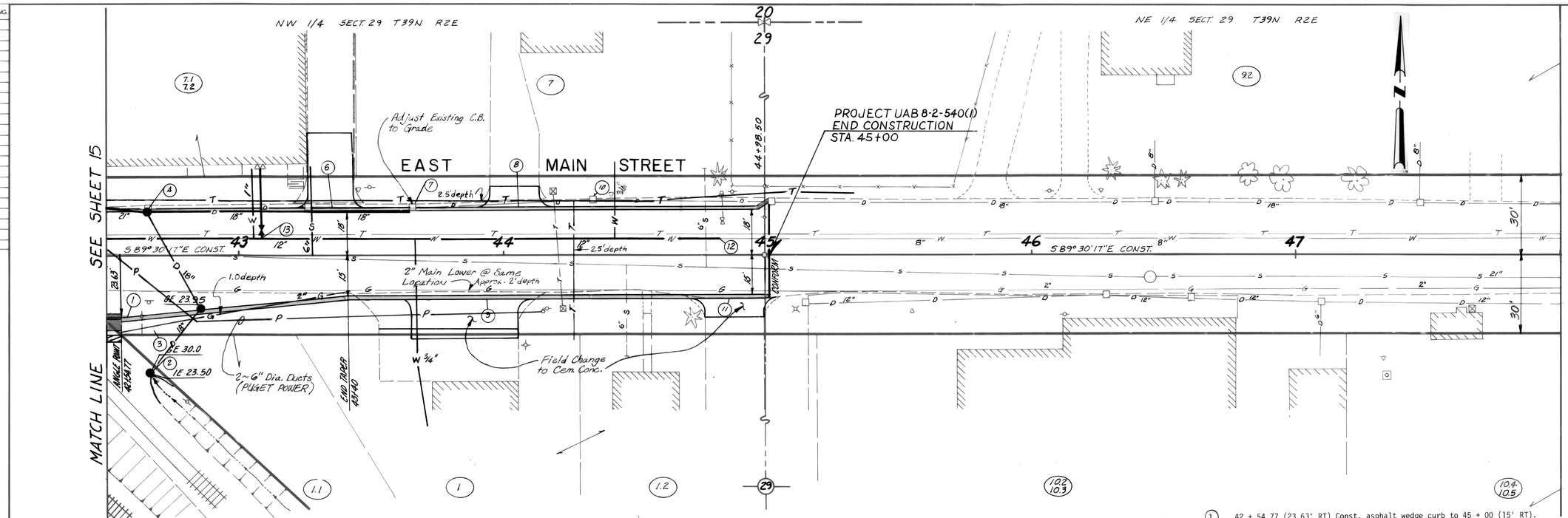

1. 42 + 54.77 (23.63' RT) Const. asphalt wedge curb to 45 + 00 (15' RT).
2. 42 + 66 (46' RT) Const. Type II CB inlet with 18" x 12' conc. pipe stub. Connect to CB at 42 + 66 (22.5' RT) with 18" x 24' conc. pipe.
3. 42 + 66 (22.5' RT) Const. Type II CB inlet. Connect to CB at 42 + 66 (18' LT) with 18" x 41' conc. pipe.
4. 42 + 66 (18' LT) Const. Type II CB inlet. Connect to CB at 41 + 75 (26' LT) with 21" x 91' conc. pipe. Remove exist. C.B. and connecting pipe.
5. 43 + 26 (18' LT) Const. Type II CB inlet. Connect to CB at 42 + 66 (18' LT) with 18" x 60' conc. pipe. Remove existing CB and connecting pipe.
6. 43 + 38 (LT) Reconst. 18' wide concrete D/W to approx. 32' LT.
7. 43 + 66 (18' LT) Const. Type II CB inlet. Connect to existing 18" pipe from East. Connect to CB at 43 + 26 (18' LT) with 18" x 40' conc. pipe. Remove existing CB and connecting pipe to West.
8. 44 + 05 (LT) Reconst. 19' wide concrete D/W to approx. 26' LT.
9. 43 + 91 (RT) Reconst. 30' wide asphalt D/W to approx. 28' RT.
10. 44 + 34 (20' LT) Adjust existing CB to grade.
11. 44 + 91 (RT) Const. 28' wide asphalt D/W to 23.4' RT.
12. 44 + 80 (6' LT) Connect proposed 12" dia. D.I. water main to existing 6" dia. water main.
13. 43 + 08 (LT) Install 12" x 6" x 12" D.I. tee and 6" gate valve for service. Connect to meter with 6" x 27' D.I. pipe.

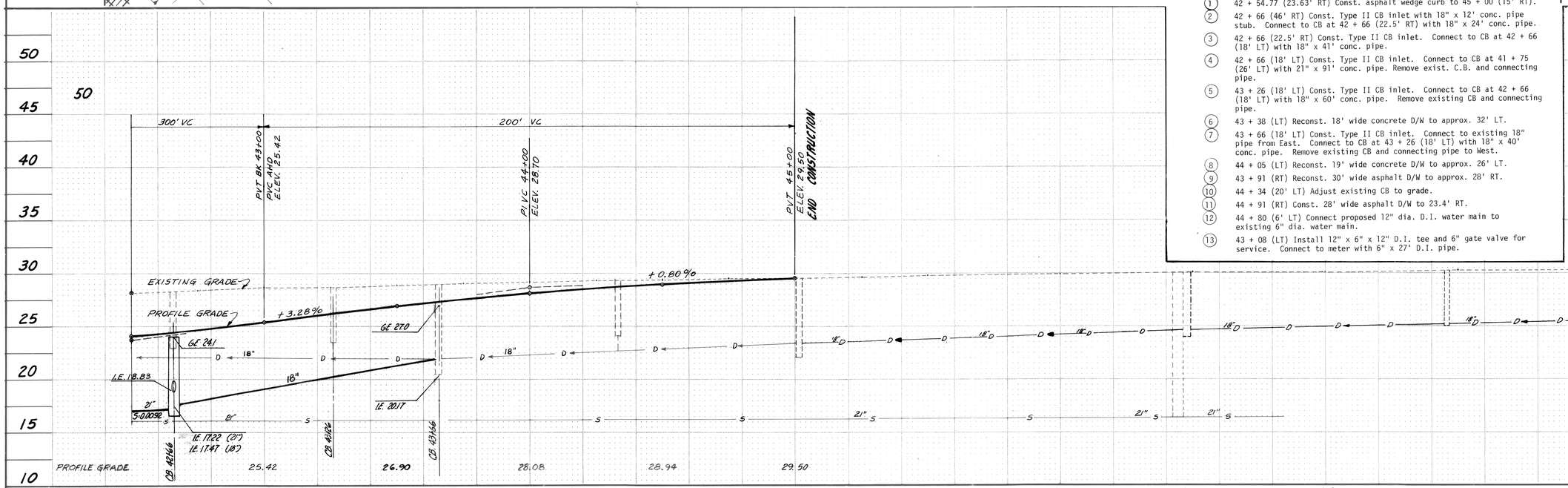

No.	Date	By	Ckd.	Appr.	Revision

ALEX J. REDFORD — STATE OF WASHINGTON — REGISTERED PROFESSIONAL ENGINEER

RODNEY H. SCHRENKEISEN — STATE OF WASHINGTON — Registered PROFESSIONAL ENGINEER

Approved By:

		Date
Drawn By:	RMB	9-76
Designed By:	RS	9-76
Checked By:	R.S.	12-77
Approved By:	AJR	12-77

ENTRANCO Engineers
ENVIRONMENTAL AND TRANSPORTATION CONSULTANTS

Scale: Horiz. 1" = 20' Vert. 1" = 5'

Job No.: B-5045-31

TOWN OF FERNDALE, WA.

EAST MAIN STREET

RAILROAD UNDERPASS IMPROVEMENT

STA. 42+50 TO STA. 48+00

PLAN & PROFILE

Sheet 16 Of 20

File No.: UAB 8-2-158 (1)

INT.	DATE	DWG.	ENG.

1. 1 + 43 to 3 + 00 (LT) Grade ditch to new culvert at 1 + 43 (23' LT)
2. 2 + 00 (8' RT) Connect proposed 10" dia. D.I. water main to existing 4" dia. water main.
3. 1 + 69 to 3 + 00 (RT) Grade ditch to new culvert at 1 + 69 (22' RT).
4. 2 + 75 to 3 + 00 (LT) Taper edge of asphalt concrete pavement to edge of existing roadway as shown.

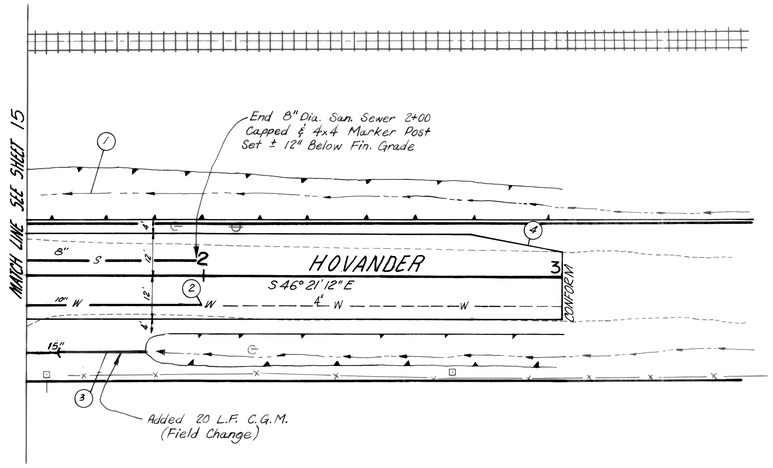

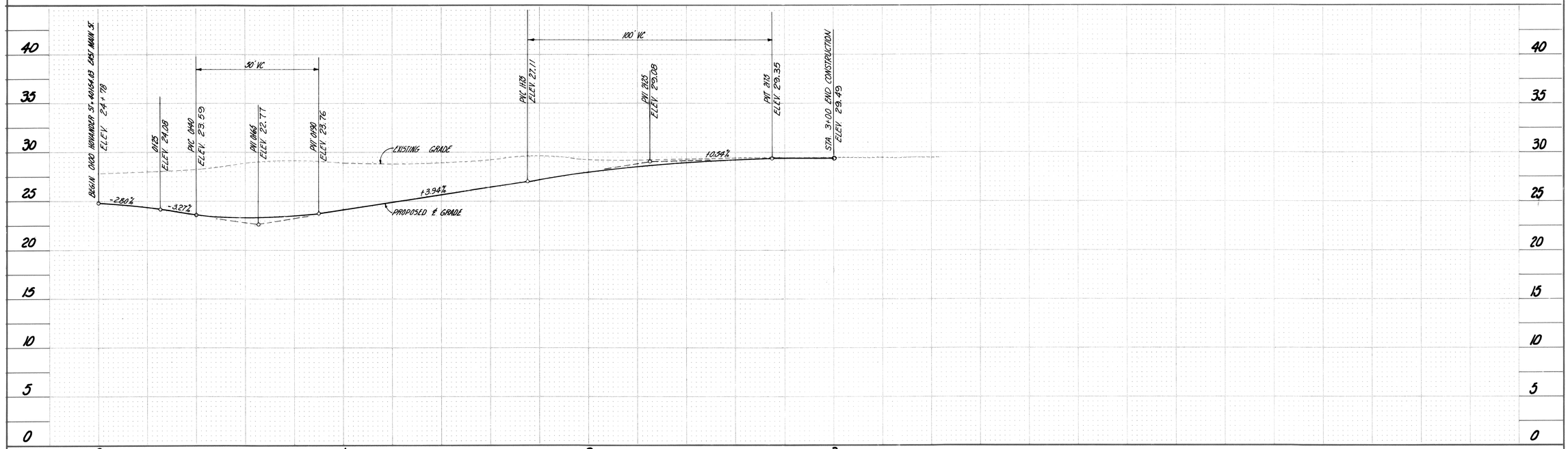

No.	Date	By	Ckd.	Appr.	Revision
1	6/4/79	JWM	JWM		Stub Sewer Revision on Hovander

ALEX J. REDFORD — STATE OF WASHINGTON — REGISTERED PROFESSIONAL ENGINEER

RODNEY H. SCHREINER — STATE OF WASHINGTON — REGISTERED PROFESSIONAL ENGINEER

Approved By:

Drawn By: GLR	Date 11-77	
Designed By: RS	11-77	
Checked By: R. S.	12-77	
Approved By: AJR	12-77	

ENTRANCO Engineers
ENVIRONMENTAL AND TRANSPORTATION CONSULTANTS

Scale: Horiz. 1" = 20' Vert. 1" = 5'

Job No.: B-5045-31

TOWN OF FERNDALE, WA.

EAST MAIN STREET RAILROAD UNDERPASS IMPROVEMENT

HOVANDER ROAD PLAN & PROFILE

Sheet 17 Of 20

File No.: UAB 8-2-158(1)

BX 00.8 & 810.11.100

INT	DATE	DWG	ENG

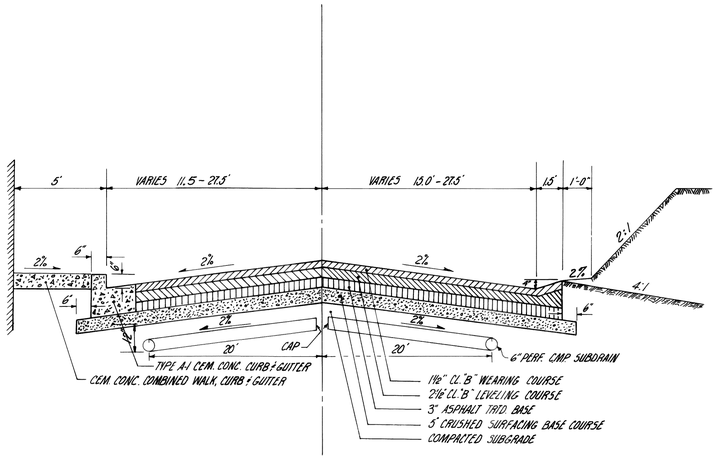

EAST MAIN STREET

TYPICAL ROADWAY SECTION

(NO SCALE)

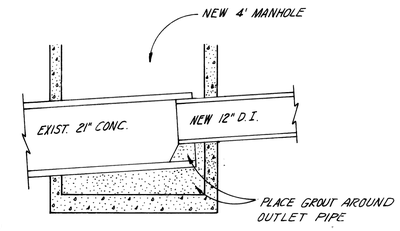

FORCE MAIN OUTLET

1/2" = 1'-0"

LEGEND

PROPOSED	EXISTING	
		BASELINE OR CONSTRUCTION LINE
		CENTERLINE
		EDGE OF GRAVEL OR DIRT
		EDGE OF ASPHALT
		EDGE OF CONCRETE
		RAILROAD RAIL
X	X	FENCE
D	D	STORM DRAIN LINE
E	E	ELECTRICAL CONDUIT (buried)
BE	BE	ELECTRICAL CABLE (buried)
PD	PD	PERFORATED DRAIN LINE
	G	GAS LINE
	S D	COMB. SAN. & STORM LINE
S	S	SANITARY SEWER LINE
T	T	TELEPHONE CONDUIT (buried)
BT	BT	TELEPHONE CABLE (buried)
W	W	WATER LINE
		ROCKERY OR RIP RAP
		STEPS
		BUILDING
		RETAINING WALL
		CONCRETE CURB
		CONCRETE CURB & GUTTER
		DRIVEWAY
		GUARD RAIL
		BRIDGE RAIL
		DITCH OR STREAM
		CULVERT
		RIGHT-OF-WAY LINE
		INTERIOR PROPERTY LINE
		EASEMENT LINE
		SIDEWALK

PROPOSED	EXISTING	
		INLET TYPE 4 & CATCH BASIN TYPE 1
		CATCH BASIN TYPE 2
		MANHOLE
		SUBDRAIN SERVICE PIT
		JUNCTION BOX
		VALVE
		WATER METER
		UTILITY POLE
		UTILITY POLE ANCHOR
		STREET LIGHT OR LUMINAIRE
		SIGN POST
		GUARD POST
		TRAFFIC SIGNAL SUPPORT POLE
		FIRE HYDRANT
		TRAFFIC BUTTON
		BENCHMARK
	6 Birch	TREE, DECIDUOUS
	6 Fir	TREE, CONIFEROUS
		SHRUB
		MONUMENT
		SECTION CORNER
		QUARTER CORNER
	9	ILLUMINATED TERMINAL NOSING
		MARSH OR SWAMP
		TEST BORE HOLE
		RAISED CHANNELIZATION
		PAINTED CHANNELIZATION
		ASPHALT WEDGE CURB

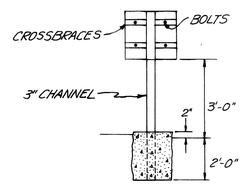

CONTROL PANEL MOUNT DETAIL

(REAR VIEW)
N.T.S.

NOTES:
1. SEE SPECIFICATIONS FOR PUMP INFORMATION.
2. PIPE KNOCK-OUT HOLES TO BE PROVIDED BY VAULT SUPPLIER AS REQUIRED.
3. 4" DIAMETER DRAIN HOLES SPACED 6' ± O.C. PLACE 1 Cu. Ft. PERVIOUS MATERIAL IN BURLAP BAG AT EACH HOLE.

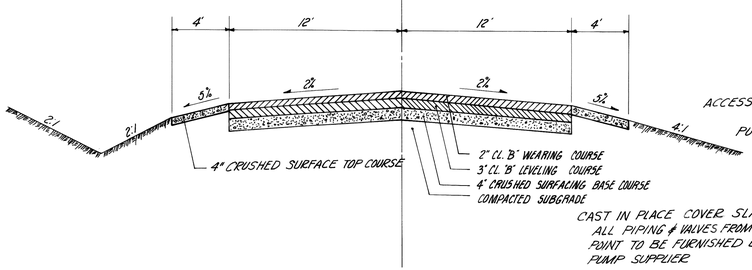

HOVANDER ROAD

TYPICAL ROADWAY SECTION

(NO SCALE)

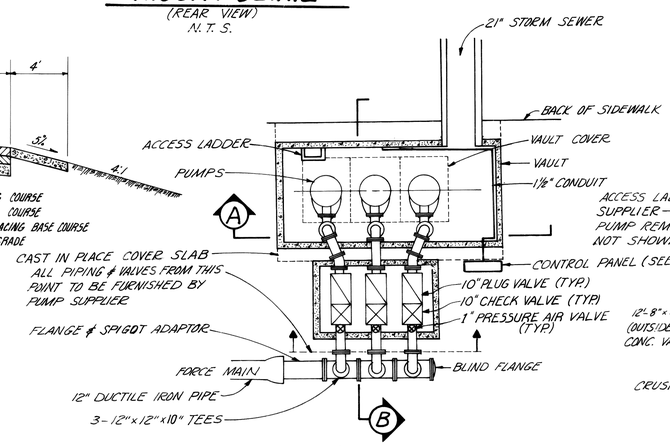

PLAN PUMP VAULT

1/4" = 1'-0"

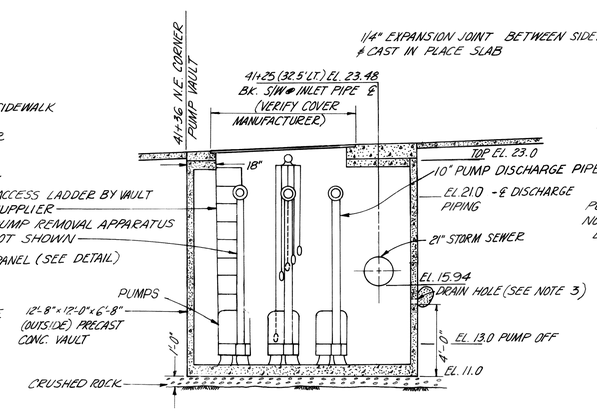

SECTION A 18

1/4" = 1'-0"

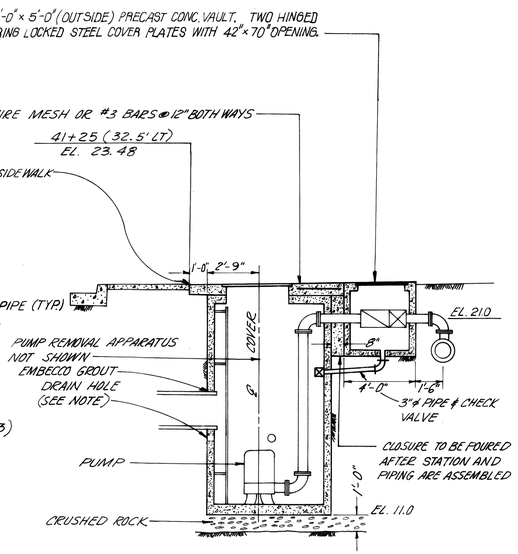

SECTION B 18

1/4" = 1'-0"

No.	Date	By	Ckd.	Appr.	Revision

ALEX J. REDFORD — STATE OF WASHINGTON — REGISTERED PROFESSIONAL ENGINEER

RODNEY H. SCHRENOHR — STATE OF WASHINGTON — REGISTERED PROFESSIONAL ENGINEER

Approved By:

Drawn By: K.B.W.	Date 11-77	
Designed By: R.S.	11-77	
Checked By: R.S.	12-77	
Approved By: A.J.R.	12-77	

ENTRANCO Engineers
ENVIRONMENTAL AND TRANSPORTATION CONSULTANTS

Scale: AS SHOWN
Job No.: B-5045-31

TOWN OF FERNDALE, WA.

EAST MAIN STREET
RAILROAD UNDERPASS IMPROVEMENT
ROADWAY SECTIONS & DETAILS

Sheet 18 Of 20
File No.: UAB 8-2-158 (1)

00171.019 2.8.06

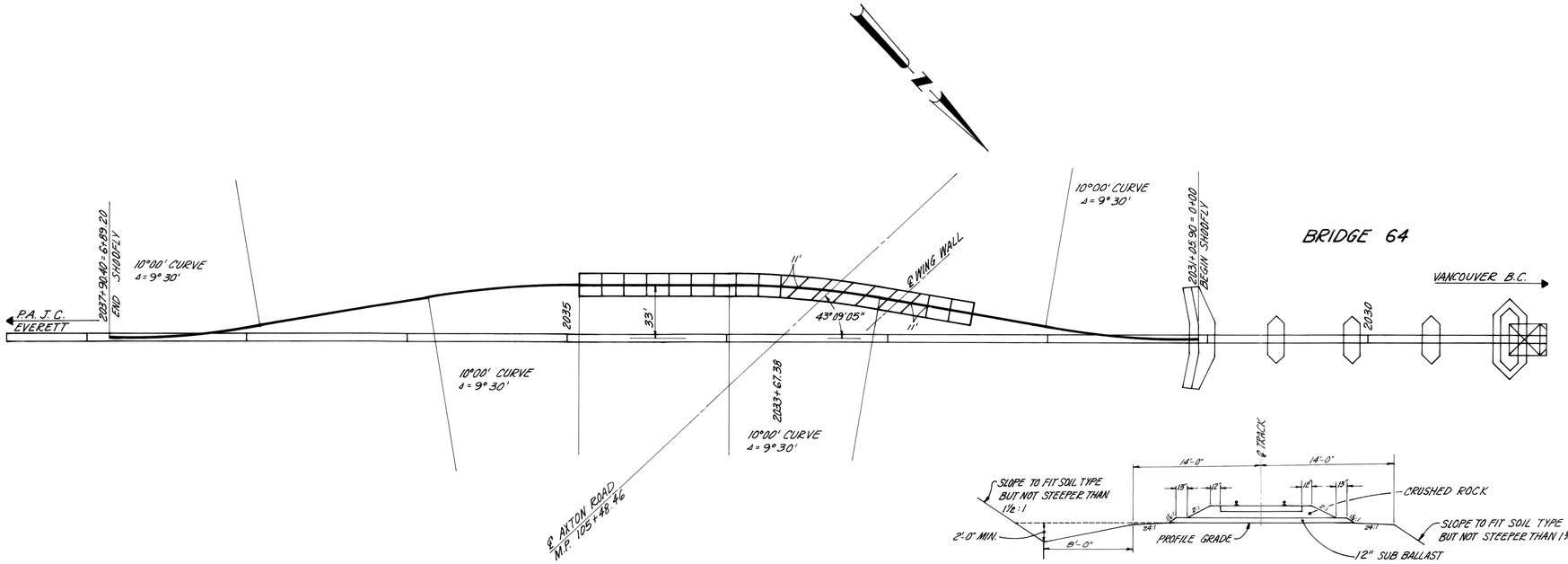

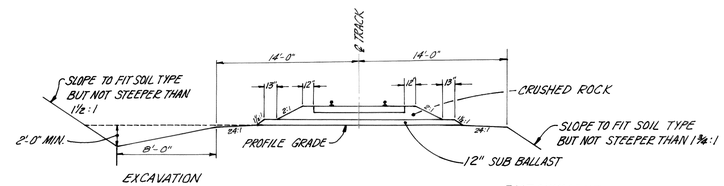

TYP. ROADBED SECTION
NO SCALE

NOTES:

1. BENT SPACING TO BEGIN WITH ℄ WING WALL WITH ADJACENT BENTS EQUAL SPACED.
2. FIX BENTS ARE PARALLEL TO ROADWAY, WITH APPROX. 11'-0" SPACING FOR ADJACENT TRANSITIONAL BENTS.
3. CONSTRUCTION TO FOLLOW STANDARD PLAN B 115-6545-1
4. PUBLIC UTILITIES TO BE NOTIFIED PRIOR TO DRIVING PILES.

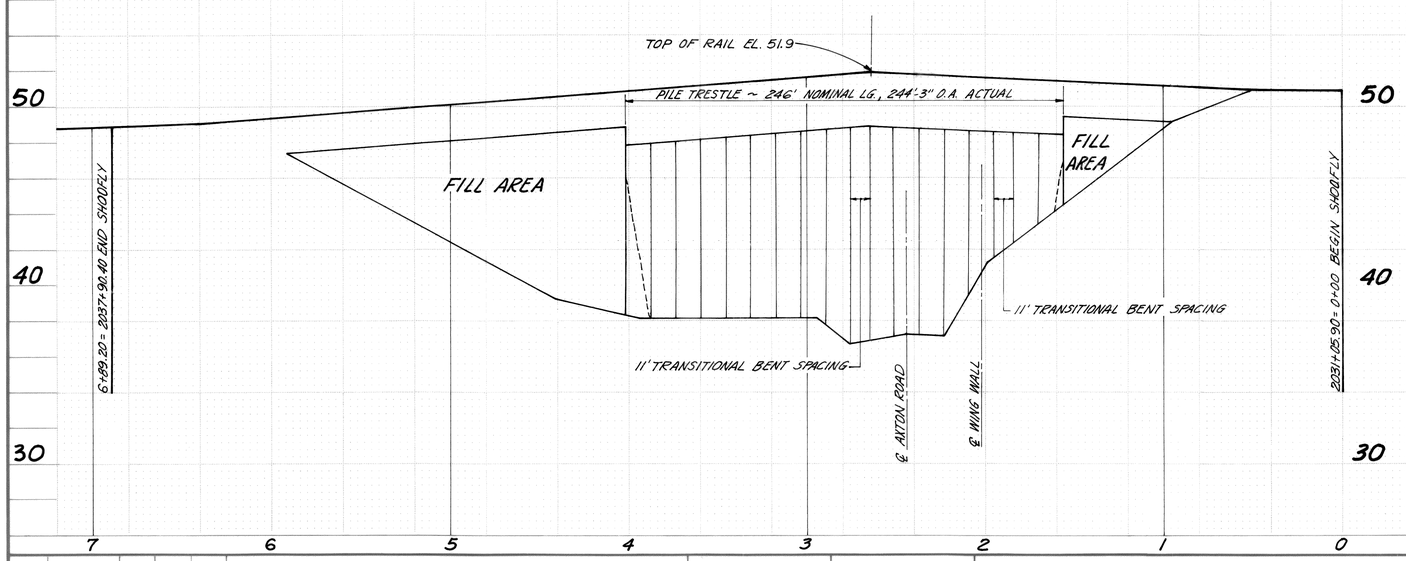

No.	Date	By	Ckd.	Appr.	Revision

Approved by:

ENTRANCO Engineers
ENVIRONMENTAL AND TRANSPORTATION CONSULTANTS

TOWN OF FERNDALE, WA.
EAST MAIN STREET
RAILROAD UNDERPASS IMPROVEMENT
SHOOFLY PLAN & PROFILE

SCALE: H: 1"=40' V: 1"=4'
JOB NO. B5045-31

ALEX J. REDFORD — STATE OF WASHINGTON — REGISTERED PROFESSIONAL ENGINEER

Drawn by: K.B.W. Date 11/77
Designed by: R.S. 11/77
Approved by: A.J.R. 12/77
Approved by:

Sheet 19 of 20
File No. UAB 8-2-158(1)

RODNEY H. SCHROEDER — STATE OF WASHINGTON — REGISTERED PROFESSIONAL ENGINEER

00171.020 2-8-06 KR

INT	DATE	DWG	ENG.

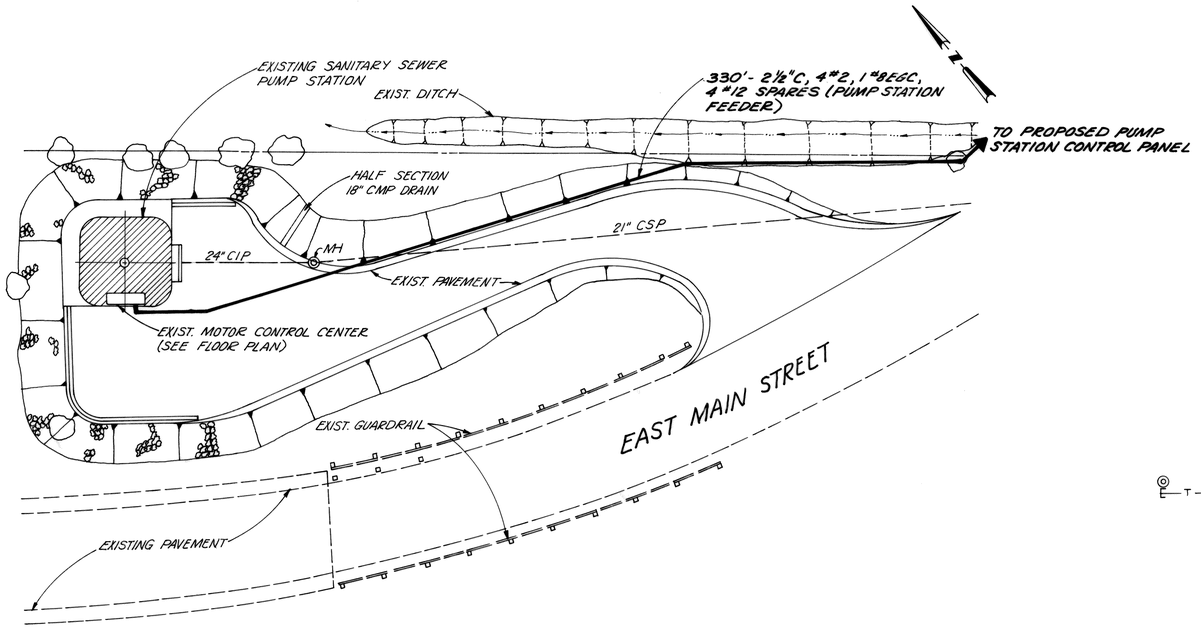

PUMP ELECTRICAL FEEDER PLAN

1" = 20'-0"

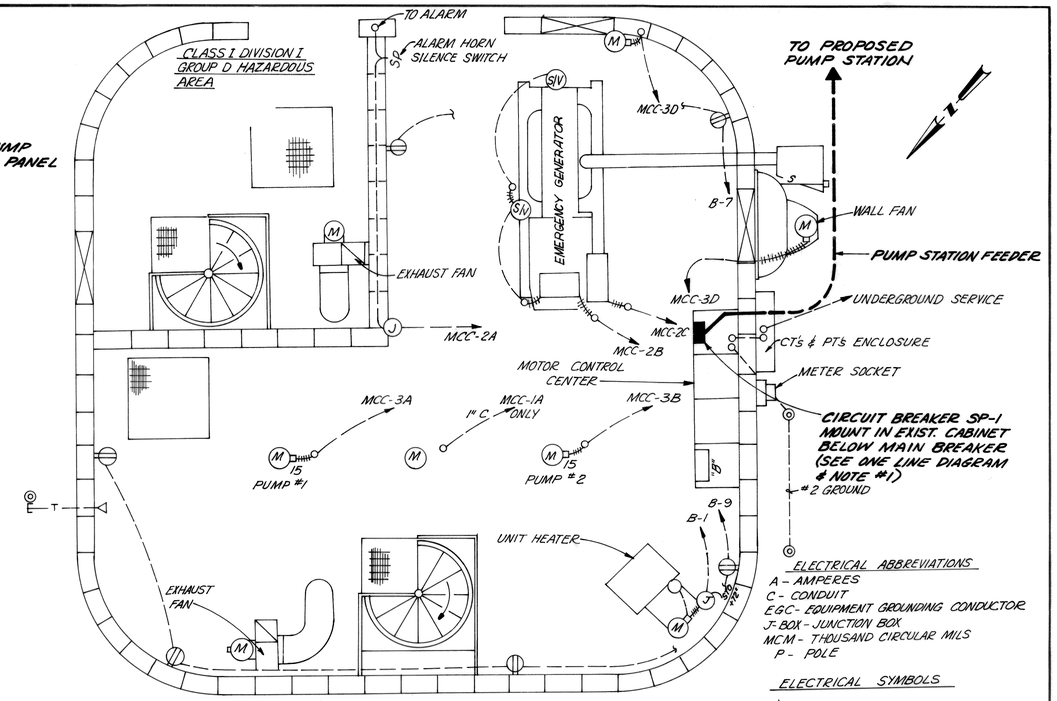

FLOOR PLAN
EXISTING PUMP STATION

3/8" = 1'-0"

ELECTRICAL ABBREVIATIONS
A - AMPERES
C - CONDUIT
EGC - EQUIPMENT GROUNDING CONDUCTOR
J-BOX - JUNCTION BOX
MCM - THOUSAND CIRCULAR MILS
P - POLE

ELECTRICAL SYMBOLS
CIRCUIT BREAKER
ELECTRICAL CONNECTION

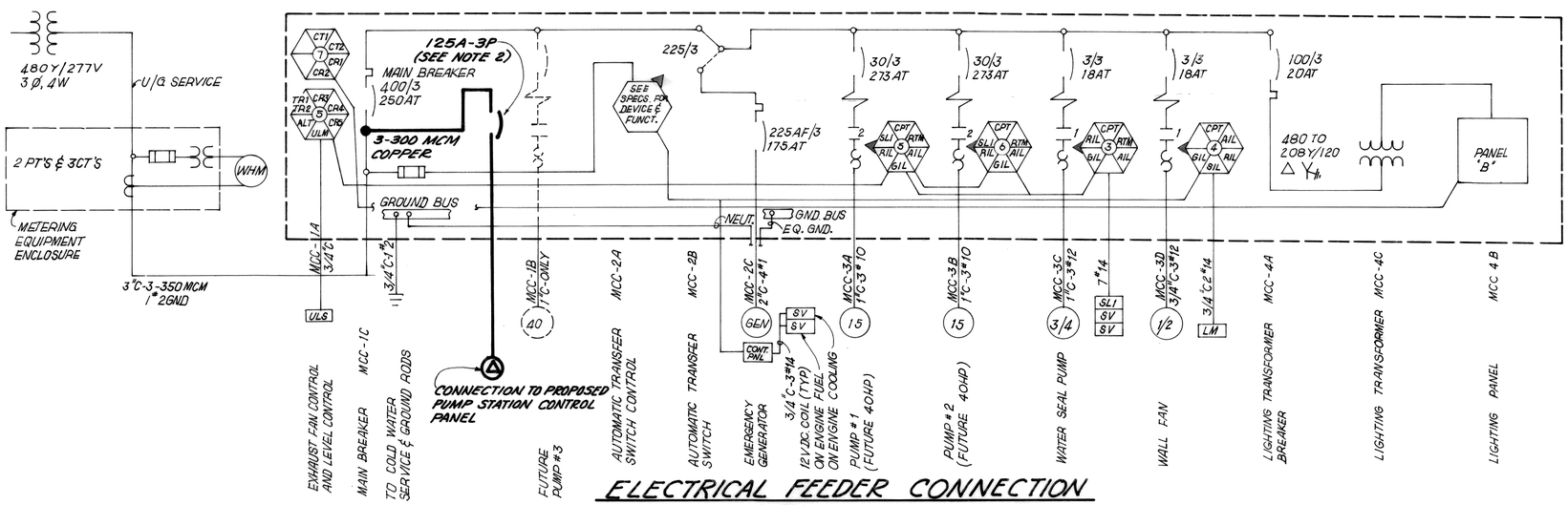

ELECTRICAL FEEDER CONNECTION
SINGLE LINE DIAGRAM

NOTES

1. INSTALL NEW CIRCUIT BREAKER IN UNUSED LOWER PORTION OF EXISTING G.E. Co. 'Av-LINE' CABINET. CONNECT BREAKER FEEDER TO SPARE LUGS ON EXISTING MAIN CIRCUIT BREAKER. CONTRACTOR TO PROVIDE SHEET METAL WORK AS REQUIRED TO FACILITATE INSTALLATION. ROUTE SUMP FEEDER THROUGH BUILDING WALL AT +1'-6" ABOVE FLOOR LEVEL. PROVIDE PERMANENT LABEL ON NEW BREAKER "STORM WATER PUMP STATION." CONTRACTOR TO FIELD VERIFY INSTALLATION.
2. PROVIDE MOLDED CASE CIRCUIT BREAKER AS SHOWN. RATED INTERRUPTING CURRENT 22,000 AMPS. MINIMUM. LINE SIDE LUGS SIZED TO ACCEPT 300 MCM CONDUCTOR. SUGGEST G.E. Co. TYPE 'TFJ' OR EQUAL.

No.	Date	By	Ckd.	Appr.	Revision

Approved By:

Drawn By: K.B.W.	Date 1-78	
Designed By: R.S.	1-78	
Checked By: R.S.	1-78	
Approved By: A.J.R.	1-78	

ENTRANCO Engineers
ENVIRONMENTAL AND TRANSPORTATION CONSULTANTS
BELLEVUE WASHINGTON

Scale: AS SHOWN
Job No.: B-5045-31

TOWN OF FERNDALE, WA.
EAST MAIN STREET
RAILROAD UNDERPASS IMPROVEMENT
PUMP STATION ELECTRICAL POWER SUPPLY

Sheet 20 Of 20
File No. UAB 8-2-158(1)

00171.021 & 28.00 KR