CITY OF FERNDALE
L.I.D. NO. 8

RECORD DRAWINGS FOR SANITARY SEWER IMPROVEMENTS
FERNDALE, WASHINGTON

SECTION 33, T 39 N, R 2 E
SECTION 4, T 38 N, R 2 E

CONSULTING ENGINEERS: WEDEN ENGINEERING, INC. 119 GRAND AVE., STE. D, BELLINGHAM, WA 98225 671-8200

OWNER: CITY OF FERNDALE

CONTACT PERSON: JOHN F. ELEY, DIRECTOR OF PUBLIC WORKS
STAN STREBEL, CITY MANAGER

DRAWING INDEX

SHEET NO.	TITLE
1.	COVER SHEET – VICINITY, NOTES, LEGEND
2.	SANITARY SEWER IMPROVEMENTS – KEY SHEET
3.	PLAN AND PROFILE – LATERAL G STA 0+00 TO STA 12+29
4.	PLAN AND PROFILE – LATERAL A STA 6+93 TO STA 17+93
	– FORCE MAIN ALONG LABOUNTY AVENUE
5.	PLAN AND PROFILE – LATERAL A STA 0+00 TO STA 6+93
6.	PLAN AND PROFILE – LATERAL B STA 0+00 TO STA 9+60
7.	PLAN AND PROFILE – LATERAL B STA 9+60 TO STA 19+75
8.	PLAN AND PROFILE – LATERAL C STA 0+00 TO STA 10+36
9.	PLAN AND PROFILE – LATERAL D STA 0+00 TO STA 4+75D
	– LATERAL F STA 0+00 TO STA 5+47F
10.	PLAN AND PROFILE – LATERAL E STA 0+00 TO STA 14+82
11.	PLAN AND PROFILE – LATERAL E STA 12+32 TO STA 20+25
12.	LIFT STATION PLAN
13.	LIFT STATION DETAILS
14.	DETAILS
15.	DETAILS
16.	LIFT STATION ELECTRICAL DETAILS
17.	LIFT STATION ELECTRICAL DETAILS

GENERAL NOTES

1. THE LOCATION AND SIZE OF EXISTING UTILITIES SHOWN IS APPROXIMATE. IT IS THE RESPONSIBILITY OF THE CONTRACTOR TO FIELD VERIFY THESE LOCATIONS PRIOR TO CONSTRUCTION.
2. ALL WORK SHALL CONFORM TO THE STANDARD PLANS AND SPECIFICATIONS OF THE WASHINGTON STATE DEPARTMENT OF TRANSPORTATION (WSDOT), 1991, AND CITY OF FERNDALE STANDARDS UNLESS INDICATED OTHERWISE BY THE CONTRACT DOCUMENTS. IN CASE OF A CONFLICT BETWEEN THE REGULATORY STANDARDS OR SPECIFICATIONS, THE MORE STRINGENT REQUIREMENT WILL PREVAIL.
3. UNDERGROUND UTILITIES ARE KNOWN TO EXIST IN THE AREA OF CONSTRUCTION. IT IS THE RESPONSIBILITY OF THE CONTRACTOR TO CONTACT THE UTILITY OWNERS FOR LOCATIONS AND TO NOTIFY THE ENGINEER PROMPTLY OF ANY CONFLICT.
4. THE CONTRACTOR SHALL BE RESPONSIBLE FOR MAINTAINING THE INTEGRITY OF ADJACENT UTILITIES WHICH INCLUDE, BUT ARE NOT LIMITED TO, WATER, SEWER, STORM SEWER, POWER, TELEPHONE, CABLE TV, NATURAL GAS, IRRIGATION, AND STREET LIGHTING.
5. THE CONTRACTOR SHALL BE RESPONSIBLE FOR MAINTAINING ALL EROSION CONTROL MEASURES THROUGHOUT THE DURATION OF THE PROJECT.
6. ELEVATION REFERS TO U.S.C. & G.S. DATUM CARRIED FROM A KNOWN BENCH MARK.
7. X,Y PARCEL NUMBERS ARE FROM THE WHATCOM COUNTY ASSESSORS OFFICE. OWNERSHIPS OF THESE PARCELS ARE ON RECORD WITH THE ABOVE REFERENCED OFFICE.
8. THE COORDINATES ON THIS PLAN ARE BASED ON AN ASSUMED COORDINATE BASE.

LEGEND

EXISTING	PLAN	PROPOSED
	CATCH BASIN	
	CULVERT	
	DETAIL NUMBER SHEET FOUND	3/3
W	WATER LINE	
	STRAW BALE DAM	
	GATE VALVE	
	HYDRANT	
	THRUST BLOCK	
	CURB CUT	
	EASEMENT	
	LIGHTING	
	LIGHTING TRENCH	2"L
G	GAS	
T	TELEPHONE	
UT	UNDERGROUND TELEPHONE	
DR	STORM DRAIN	
E	ELECTRICAL	
UE	UNDERGROUND ELECTRICAL	
	SANITARY SEWER	SS
	FORCE MAIN	FM
	DITCH	
	SILT FENCE	SF
50	ELEVATION CONTOUR	
	APPROXIMATE PROPERTY LINE	
	RIGHT OF WAY	
	EDGE OF PAVING	

PROFILE

	EXISTING GROUND
	MANHOLE / SANITARY SEWER
	FORCE MAIN
	CATCH BASIN / STORM PIPE
OR	EXISTING PIPING

PROJECT SITE

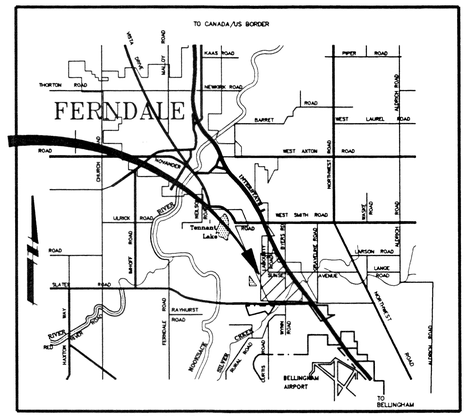

NOT TO SCALE

WARNING!
UTILITIES IN AREA
CALL UTILITY LOCATORS
PRIOR TO ANY EXCAVATION.

GLENN O. LILE
STATE OF WASHINGTON
PROFESSIONAL ENGINEER
EXPIRES 11-21-15
5-29-15

RECORD DRAWING

C:\DWG\3022RD1A 10/14/94 09.32

NO.	REVISIONS	BY	DATE

WEDEN ENGINEERING, INC.
119 GRAND AVENUE, SUITE D,
BELLINGHAM, WA. 98225 671-8200

ONE INCH AT FULL SCALE
IF NOT ONE INCH SCALE ACCORDINGLY

DESIGNED BY
DRAWN BY
CHECKED BY

CITY OF FERNDALE L.I.D. NO. 8
SANITARY SEWER EXTENSION
TITLE, VICINITY MAP, LEGEND, NOTES, AND SHEET INDEX

DATE 10/14/94
SCALE AS NOTED
REC. NO. 93022
SHEET 1 OF 17

SECTION 33, 39N, R 2E
SECTION 4, 38N, R 2E

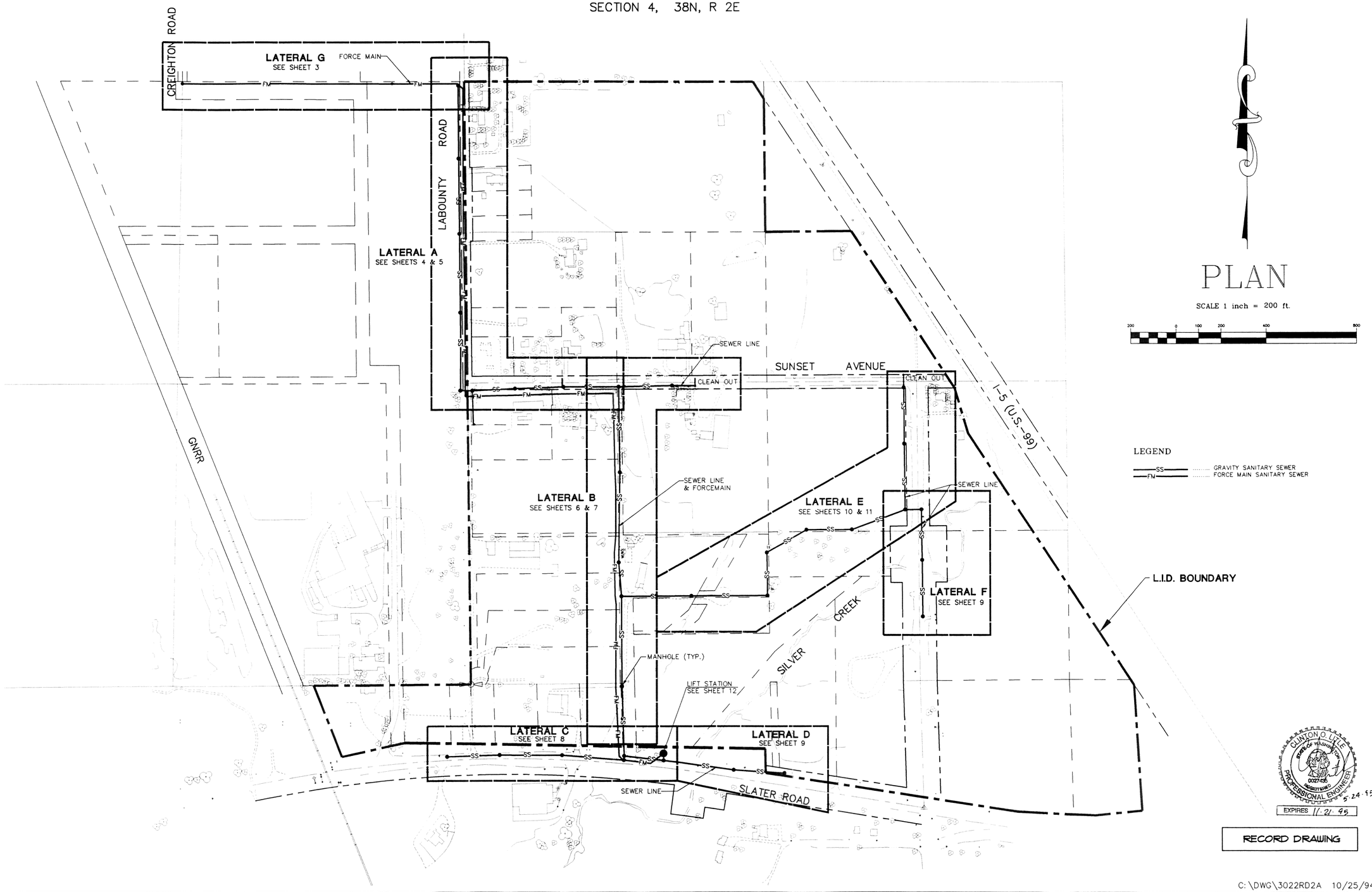

C:\DWG\3022RD2A 10/25/94 07:20

NO.	REVISIONS	BY	DATE

WEDEN ENGINEERING, INC.
119 GRAND AVENUE, SUITE D,
BELLINGHAM, WA. 98225 671-8200

ONE INCH AT FULL SCALE
IF NOT ONE INCH SCALE ACCORDINGLY

DESIGNED BY
DRAWN BY
CHECKED BY

CITY OF FERNDALE L.I.D. NO. 8
SANITARY SEWER EXTENSION
KEY MAP

DATE	SHEET
10/14/94	2
SCALE 1" = 200'	OF
REC. NO. 93022	17

SECTION 33, T. 39N., R. 2E.

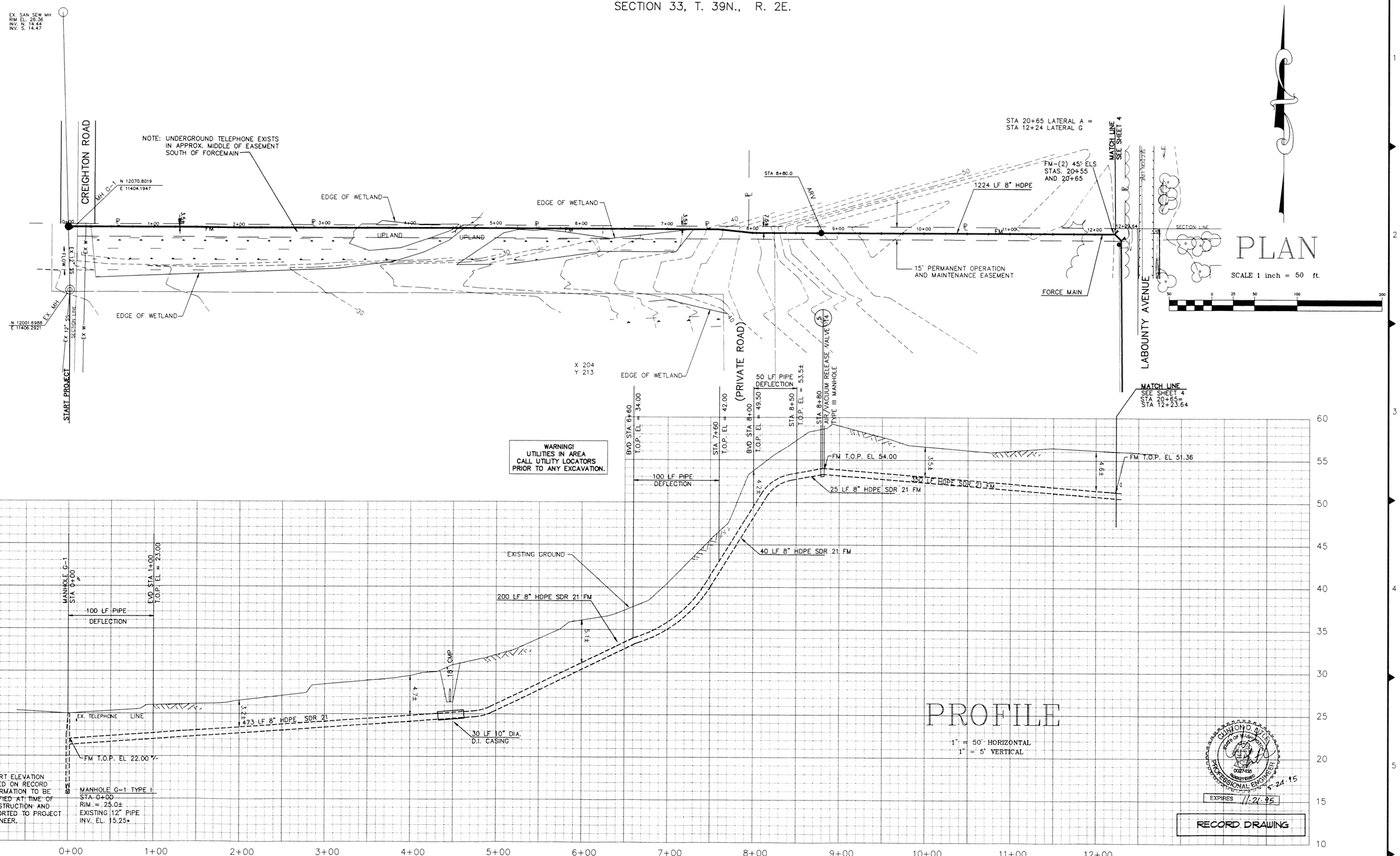

C:\DWG\3022RD3A 11/15/94 10:11

NO.	REVISIONS	BY	DATE

WEDEN ENGINEERING, INC.
119 GRAND AVENUE, SUITE D,
BELLINGHAM, WA. 98225 671-8200

ONE INCH AT FULL SCALE
IF NOT ONE INCH SCALE ACCORDINGLY

DESIGNED BY
DRAWN BY
CHECKED BY J.C.W.

CITY OF FERNDALE L.I.D. NO. 8
SANITARY SEWER EXTENSION
PLAN PROFILE STA 0+00 TO STA 12+29
LATERAL G

DATE 10/14/94
SCALE 1"=50'H 1"=5'V
REC. NO. 93022
SHEET 3 OF 17

SECTION 33, T. 39N., R. 2E.

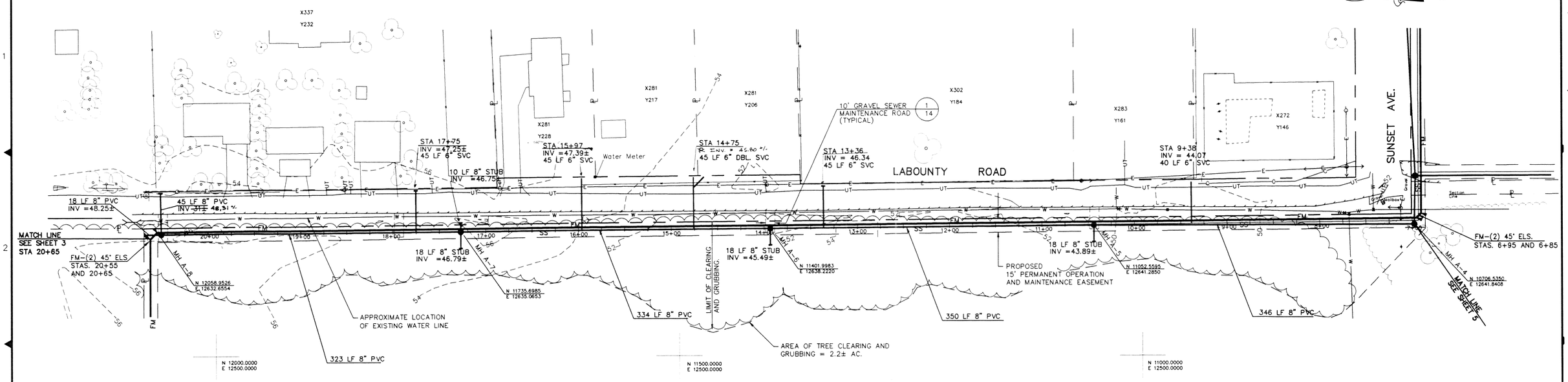

NOTE:
SIDE SEWER INVERT ELEVATIONS GIVEN ARE APPROXIMATE, I.E. ±0.5'.

PLAN

SCALE 1 inch = 50 ft.

WARNING!
UTILITIES IN AREA
CALL UTILITY LOCATORS
PRIOR TO ANY EXCAVATION.

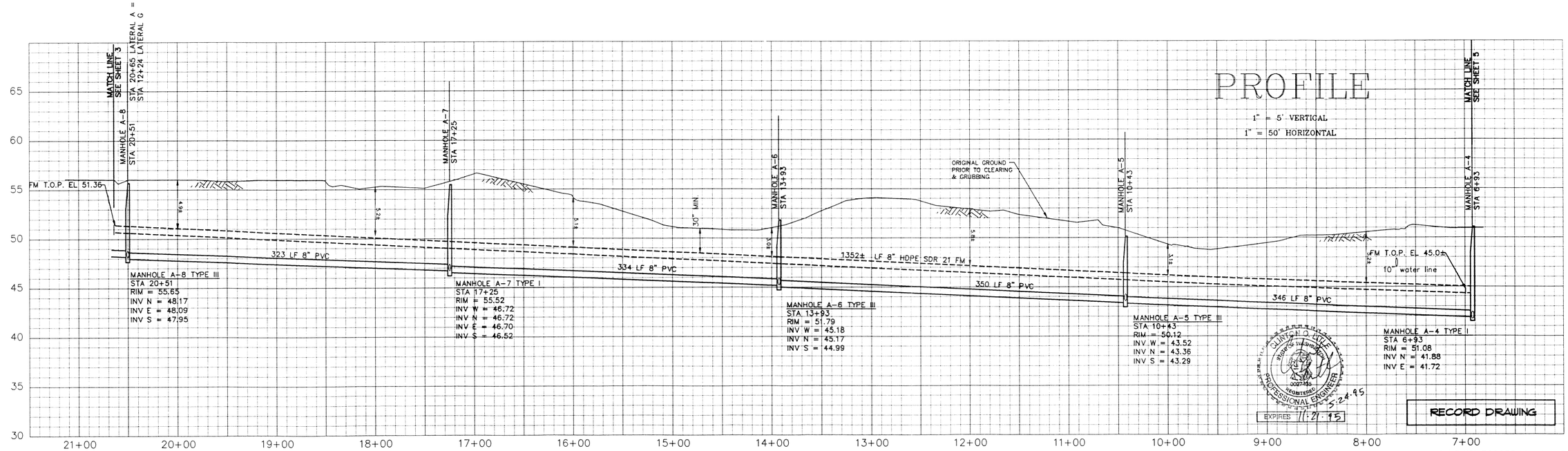

PROFILE

1" = 5' VERTICAL
1" = 50' HORIZONTAL

CLINTON D. WEDEN STATE OF WASHINGTON 22744 REGISTERED PROFESSIONAL ENGINEER 5-24-95
EXPIRES 11-21-95

RECORD DRAWING

C:\DWG\3022RD4A 11/15/94 10:19

NO.	REVISIONS	BY	DATE

WEDEN ENGINEERING, INC.
119 GRAND AVENUE, SUITE D,
BELLINGHAM, WA. 98225 671-8200

ONE INCH AT FULL SCALE
IF NOT ONE INCH SCALE ACCORDINGLY

DESIGNED BY
DRAWN BY
CHECKED BY JLW

CITY OF FERNDALE L.I.D. NO. 8
SANITARY SEWER EXTENSION
PLAN PROFILE STA 6+93 TO STA 17+93
LATERAL A

DATE 10/14/94
SCALE 1"=50'H 1"=5'V
REC. NO. 93022
SHEET 4 OF 17

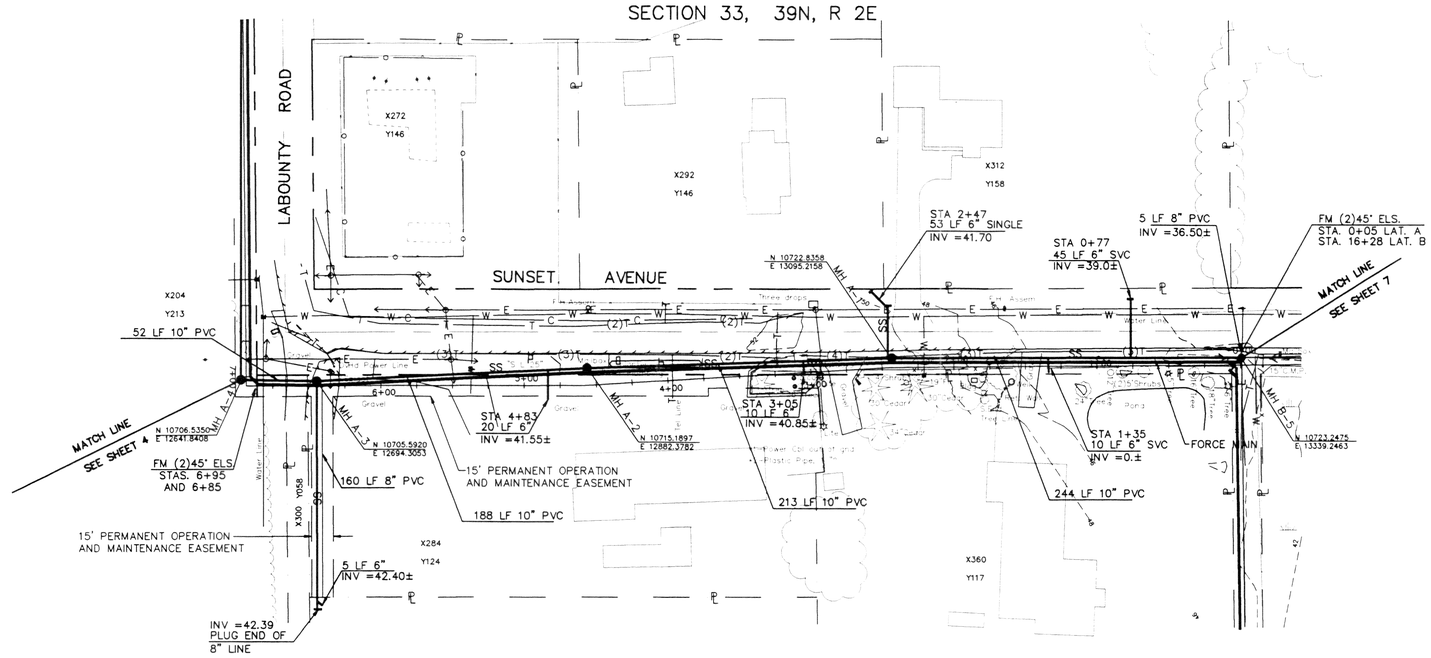

NOTE:
SIDE SEWER INVERT ELEVATIONS
GIVEN ARE APPROXIMATE, I.E. ±0.5'.

PLAN

SCALE 1 inch = 50 ft.

WARNING!
UTILITIES IN AREA
CALL UTILITY LOCATORS
PRIOR TO ANY EXCAVATION.

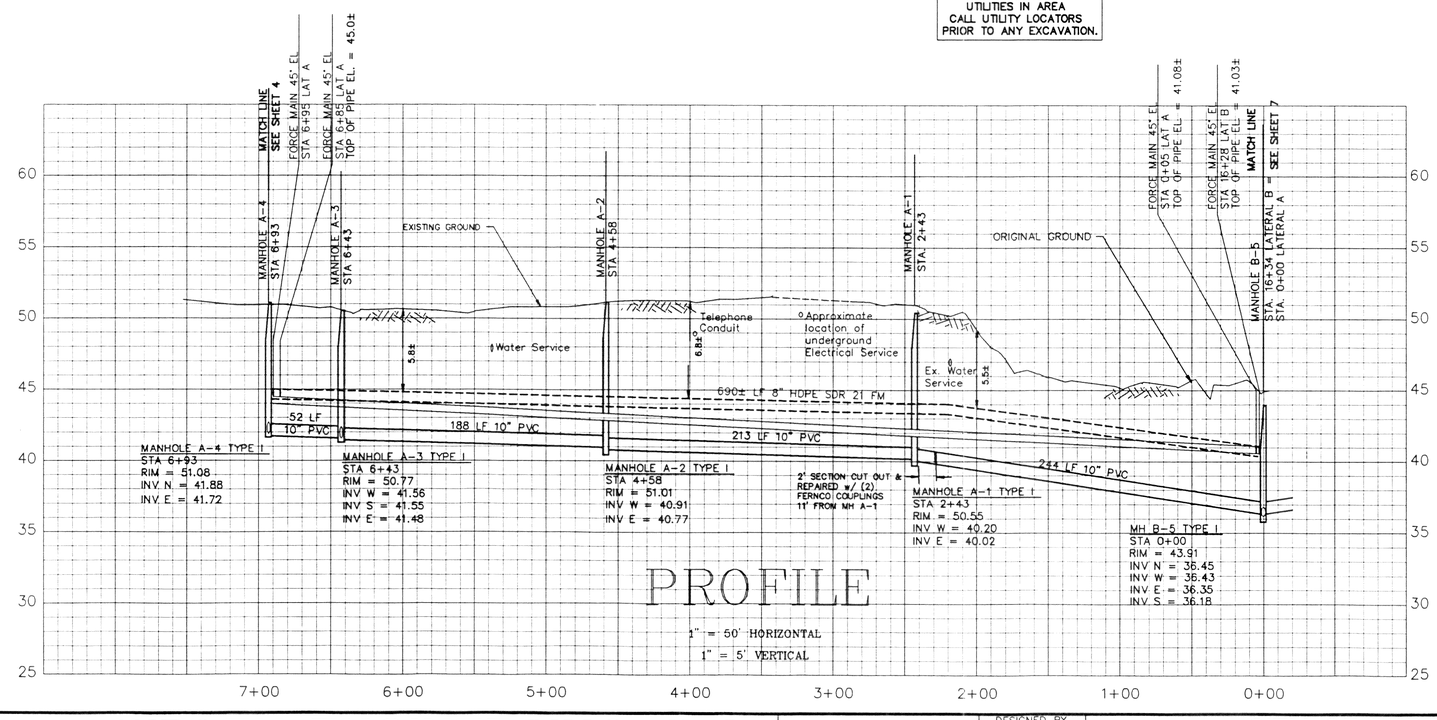

PROFILE

1" = 50' HORIZONTAL
1" = 5' VERTICAL

CLINTON O. LYLE
STATE OF WASHINGTON
00277430
REGISTERED
PROFESSIONAL ENGINEER
5-24-95
EXPIRES 11-27-95

RECORD DRAWING

C:\DWG\3022RD5A 11/15/94 10:21

NO.	REVISIONS	BY	DATE

WEDEN ENGINEERING, INC.
119 GRAND AVENUE, SUITE D,
BELLINGHAM, WA. 98225 671-8200

ONE INCH AT FULL SCALE
IF NOT ONE INCH SCALE ACCORDINGLY

DESIGNED BY
DRAWN BY
CHECKED BY

CITY OF FERNDALE L.I.D. NO. 8
SANITARY SEWER EXTENSION
PLAN PROFILE STA 0+00 TO STA 6+93
LATERAL A

DATE 10/14/94
SCALE 1"=50'H 1"=5'V
REC. NO. 93022
SHEET 5 OF 17

00103.005 2.8.06 KR

SECTION 33, 39N, R 2E

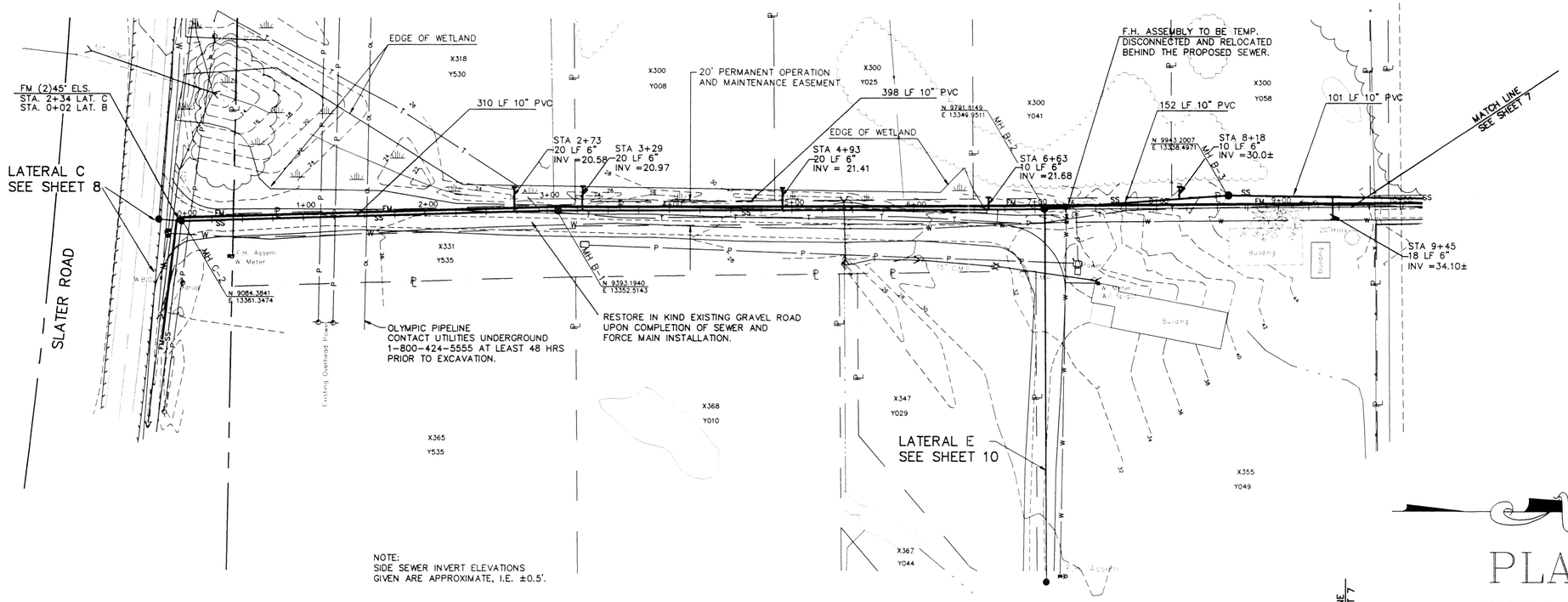

WARNING!
UTILITIES IN AREA
CALL UTILITY LOCATORS
PRIOR TO ANY EXCAVATION.

PLAN

SCALE 1 inch = 50 ft.

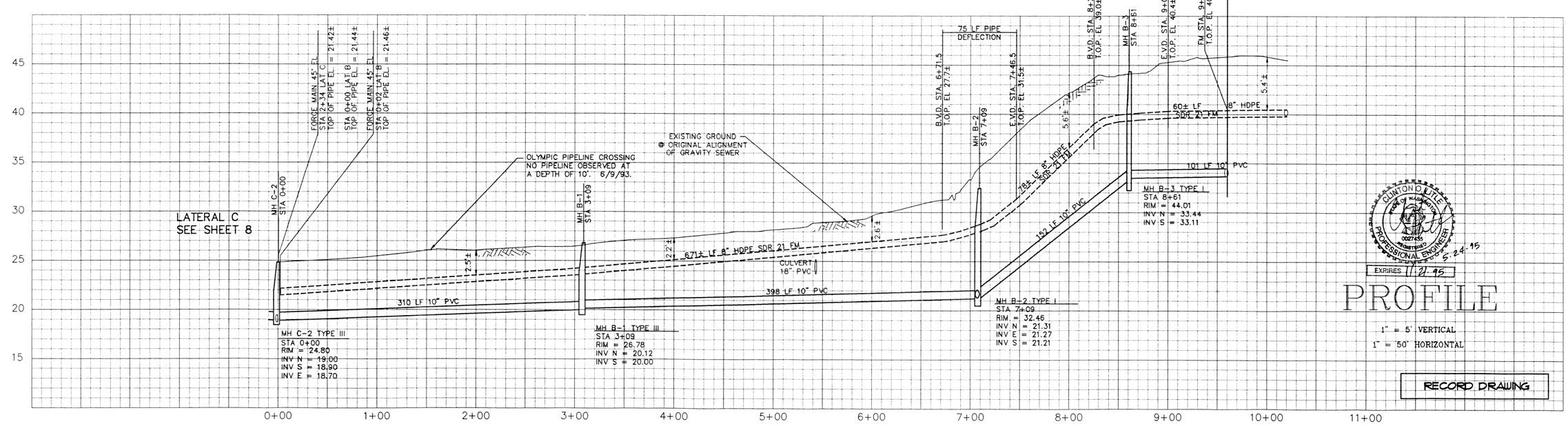

CLINTON D. LILE
STATE OF WASHINGTON
00027455
REGISTERED
PROFESSIONAL ENGINEER
5-24-95
EXPIRES 11-21-95

PROFILE

1" = 5' VERTICAL
1" = 50' HORIZONTAL

RECORD DRAWING

C:\DWG\3022RD6A 11/15/94 10:24

NO.	REVISIONS	BY	DATE

WEDEN ENGINEERING, INC.
119 GRAND AVENUE, SUITE D,
BELLINGHAM, WA. 98225 671-8200

ONE INCH AT FULL SCALE
IF NOT ONE INCH SCALE ACCORDINGLY

DESIGNED BY
DRAWN BY
CHECKED BY J.W.

CITY OF FERNDALE L.I.D. NO. 8
SANITARY SEWER EXTENSION
PLAN PROFILE - STA 0+00 TO STA 9+60
LATERAL B and FORCE MAIN

DATE 10/14/94
SCALE 1" = 50' H 1" = 5' V
REC. NO. 93022
SHEET 6 OF 17

RR 9.8.09

SECTION 33, 39N, R 2E

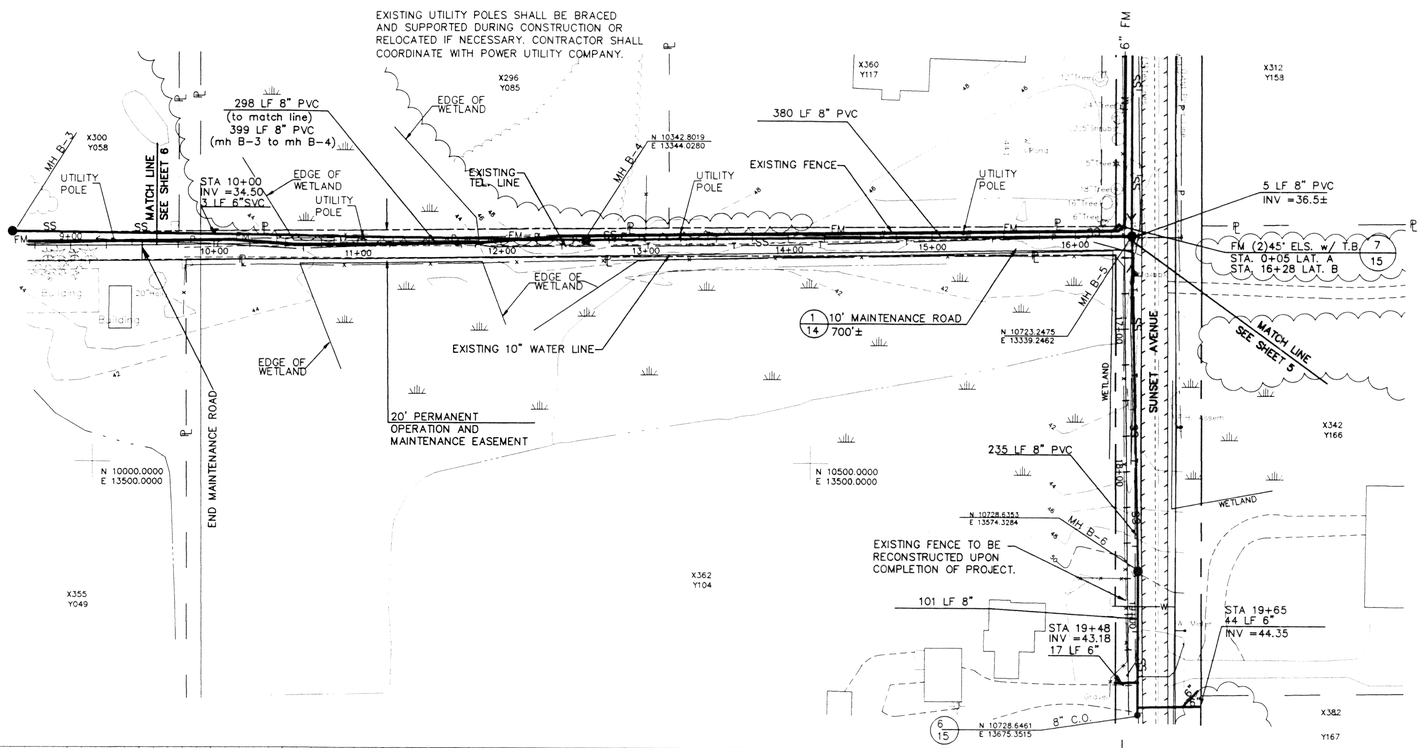

NOTE:
SIDE SEWER INVERT ELEVATIONS GIVEN ARE APPROXIMATE, I.E. ±0.5'.

WARNING!
UTILITIES IN AREA
CALL UTILITY LOCATORS
PRIOR TO ANY EXCAVATION.

PLAN

SCALE 1 inch = 50 ft.

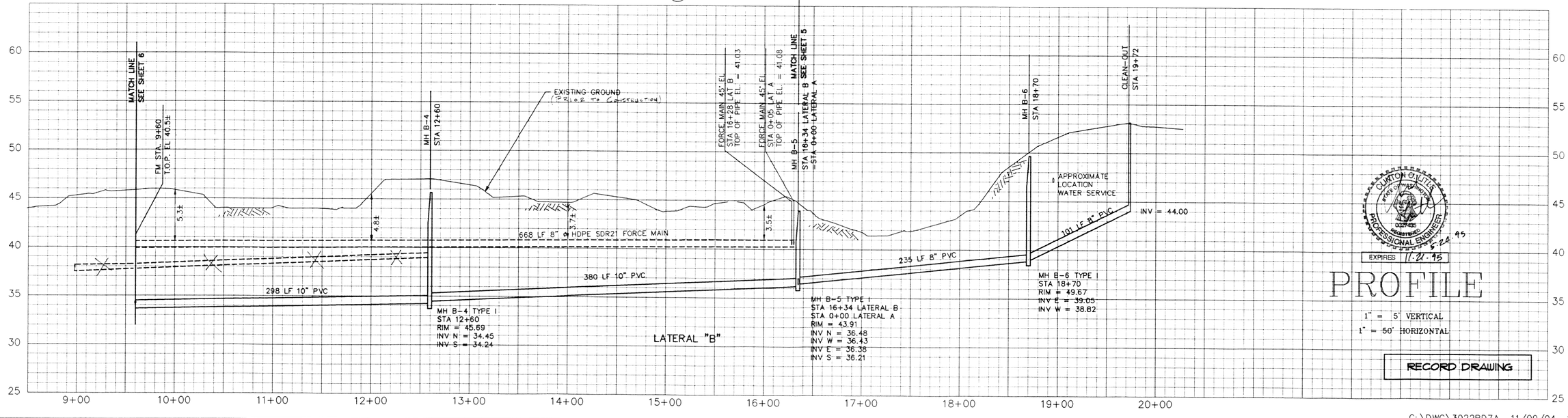

CLINTON O. LUTTS
STATE OF WASHINGTON
00027455
REGISTERED PROFESSIONAL ENGINEER
5-24-95
EXPIRES 11-21-95

PROFILE

1" = 5' VERTICAL
1" = 50' HORIZONTAL

RECORD DRAWING

C:\DWG\3022RD7A 11/09/94 10:10

NO.	REVISIONS	BY	DATE

WEDEN ENGINEERING, INC.
119 GRAND AVENUE, SUITE D,
BELLINGHAM, WA. 98225 671-8200

ONE INCH AT FULL SCALE
IF NOT ONE INCH SCALE ACCORDINGLY

DESIGNED BY
DRAWN BY
CHECKED BY JLW

CITY OF FERNDALE L.I.D. NO. 8
SANITARY SEWER EXTENSION
PLAN PROFILE STA 9+60 TO STA 19+75
LATERAL B and FORCE MAIN

DATE 10/14/94
SCALE 1"=50' H 1"=5' V
REC. NO. 93022
SHEET 7 OF 17

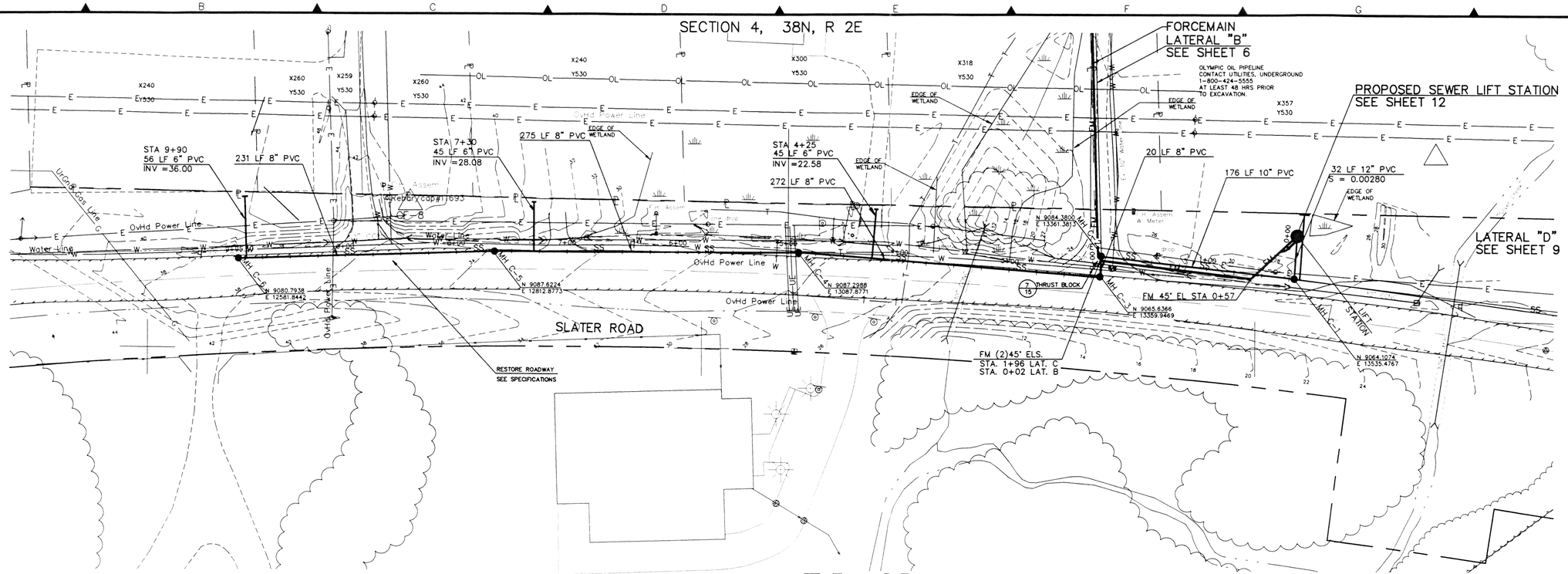

PLAN

SCALE 1 inch = 50 ft.

WARNING!
UTILITIES IN AREA
CALL UTILITY LOCATORS
PRIOR TO ANY EXCAVATION.

NOTE:
SIDE SEWER INVERT ELEVATIONS
GIVEN ARE APPROXIMATE, I.E. ±0.5'.

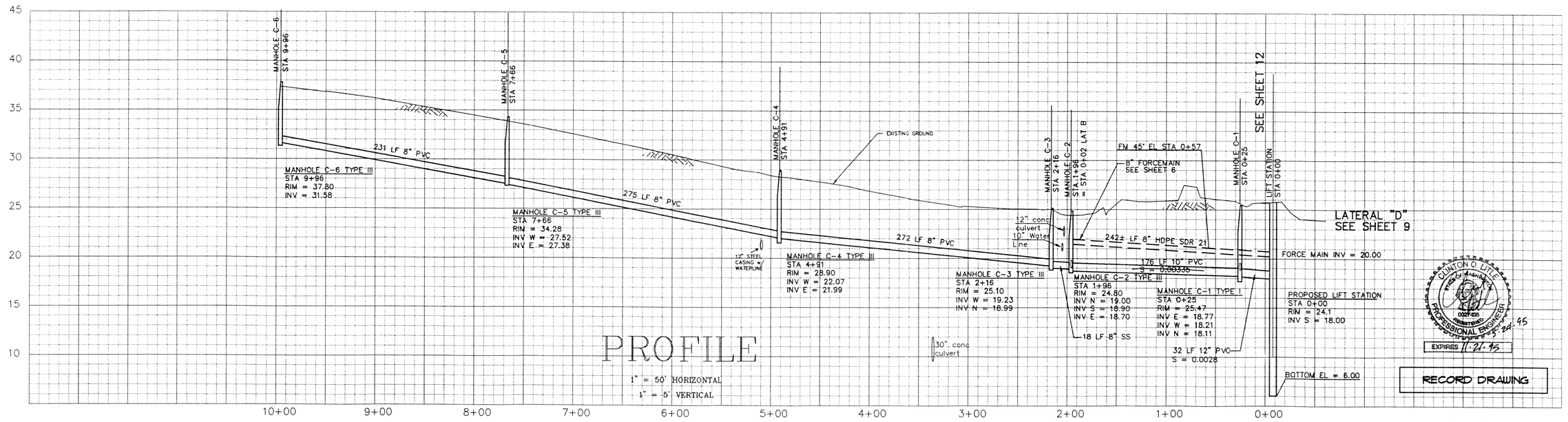

PROFILE

1" = 50' HORIZONTAL
1" = 5' VERTICAL

CLINTON O. LITTLE
STATE OF WASHINGTON
22875
REGISTERED PROFESSIONAL ENGINEER
5-22-95
EXPIRES 11-21-95

RECORD DRAWING

C:\DWG\3022RD8A 01/04/95 15:24

NO.	REVISIONS	BY	DATE

WEDEN ENGINEERING, INC.
119 GRAND AVENUE, SUITE D,
BELLINGHAM, WA. 98225 671-8200

ONE INCH AT FULL SCALE
IF NOT ONE INCH SCALE ACCORDINGLY

DESIGNED BY
DRAWN BY
CHECKED BY FLW

CITY OF FERNDALE L.I.D. NO. 8
SANITARY SEWER EXTENSION
PLAN PROFILE STA 0+00 TO STA 10+36
LATERAL C

DATE 10/14/94
SCALE 1"=50'H 1"=5'V
REC. NO. 93022
SHEET 8 OF 17

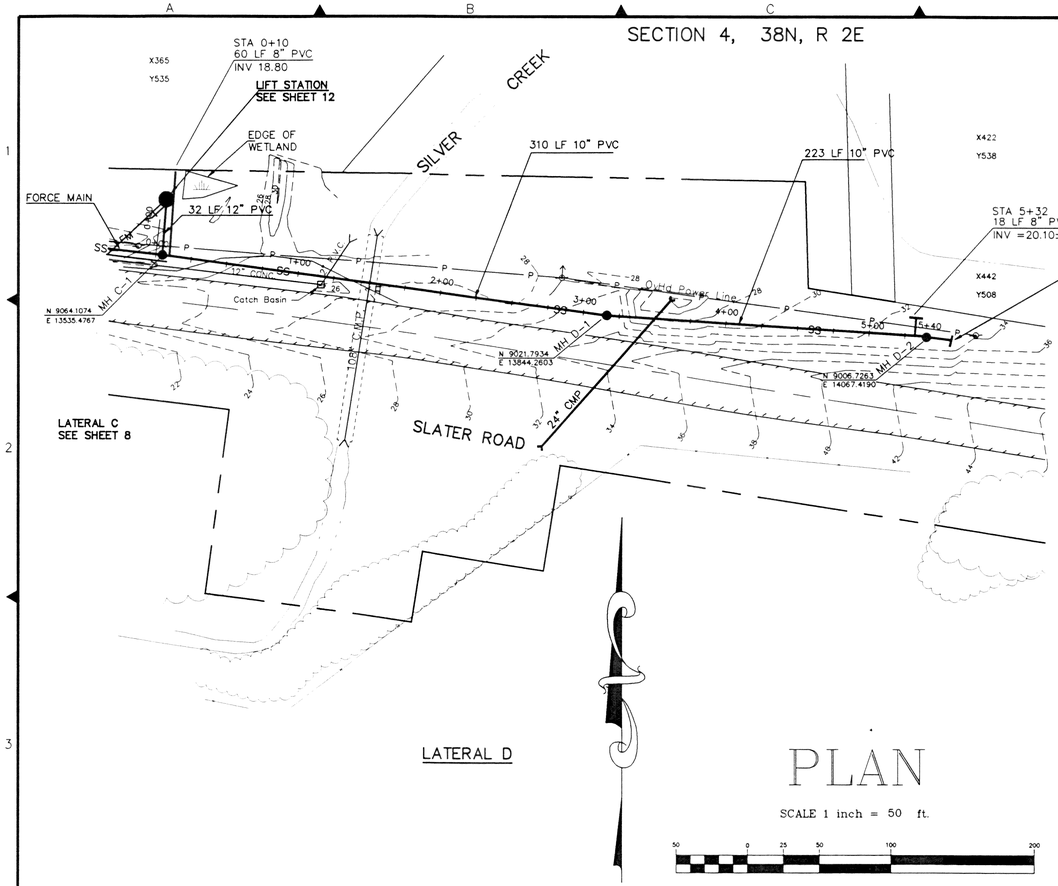

* NOTE:
SIDE SEWER INVERT ELEVATIONS GIVEN ARE APPROXIMATE, I.E. ±0.5'.

WARNING!
UTILITIES IN AREA
CALL UTILITY LOCATORS
PRIOR TO ANY EXCAVATION.

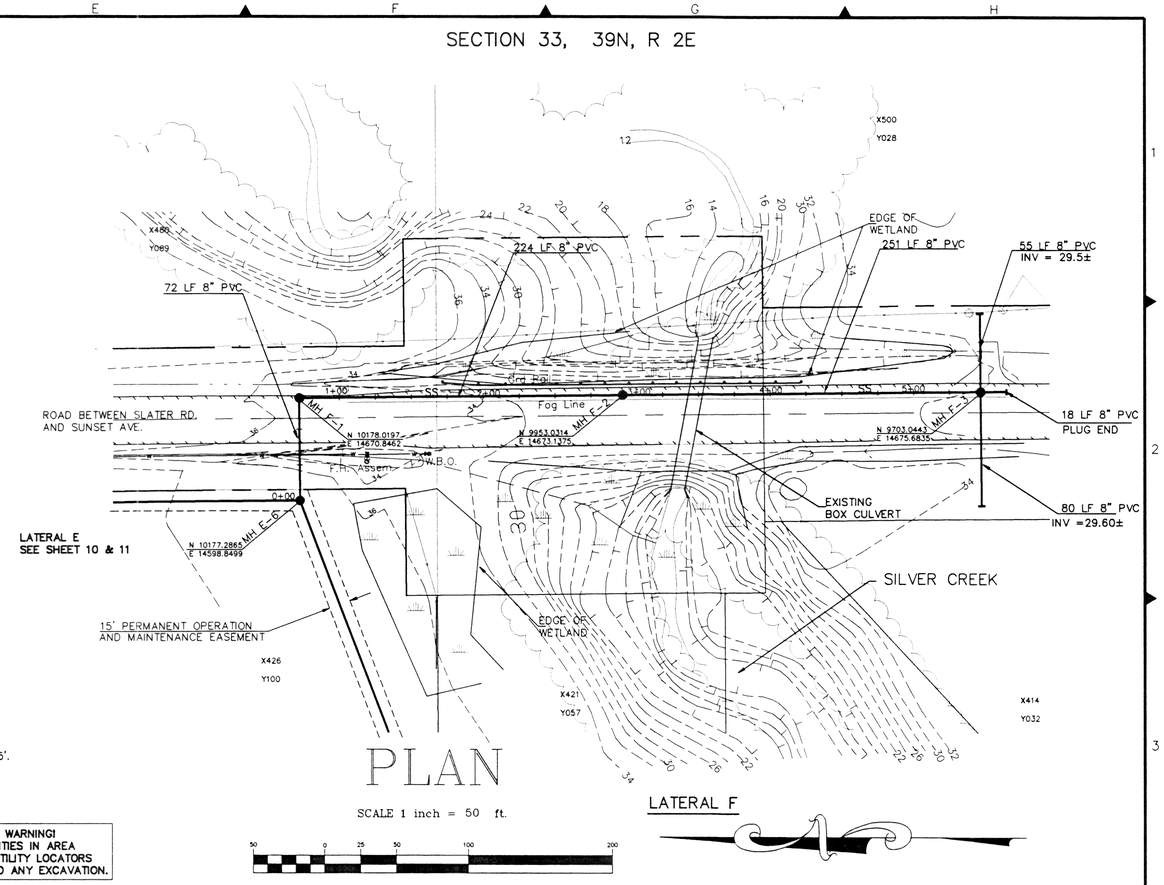

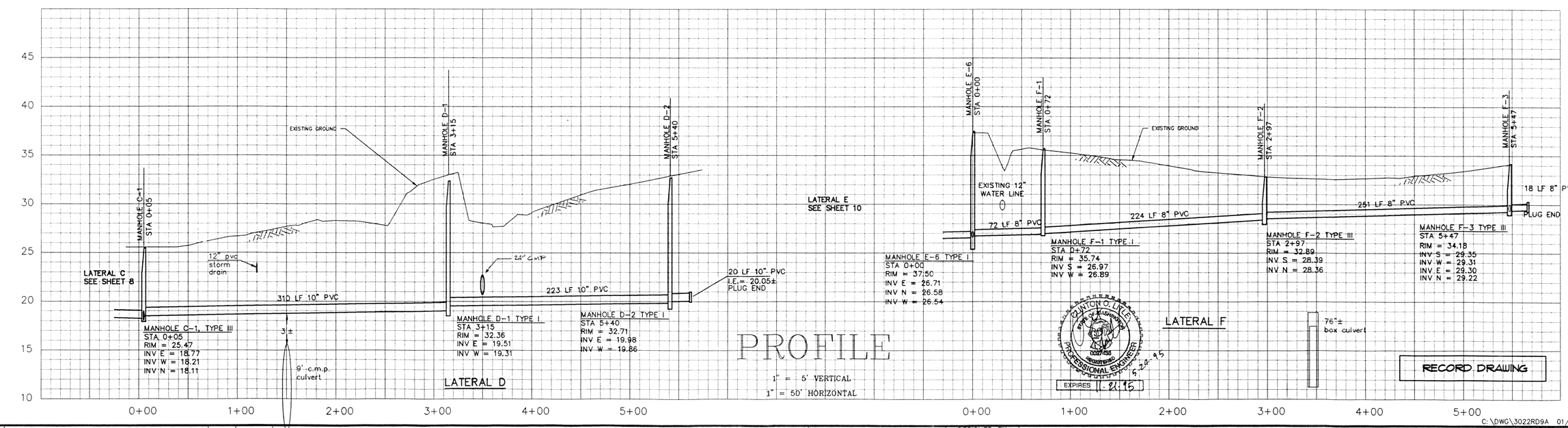

C:\DWG\3022RD9A 01/04/95 15:47

NO.	REVISIONS	BY	DATE

WEDEN ENGINEERING, INC.
119 GRAND AVENUE, SUITE D,
BELLINGHAM, WA. 98225 671-8200

ONE INCH AT FULL SCALE
IF NOT ONE INCH SCALE ACCORDINGLY

DESIGNED BY
DRAWN BY
CHECKED BY JCW

CITY OF FERNDALE L.I.D. NO. 8
SANITARY SEWER EXTENSION
PLAN PROFILE STA 0+00 TO STA 4+75 (D)
PLAN PROFILE STA 0+00 TO STA 5+47 (F)
LATERAL D AND F

DATE 10/14/94
SCALE 1"=50'H 1"=5'V
REC. NO. 93022
SHEET 9 OF 17

00103.009 2.8.06 KE

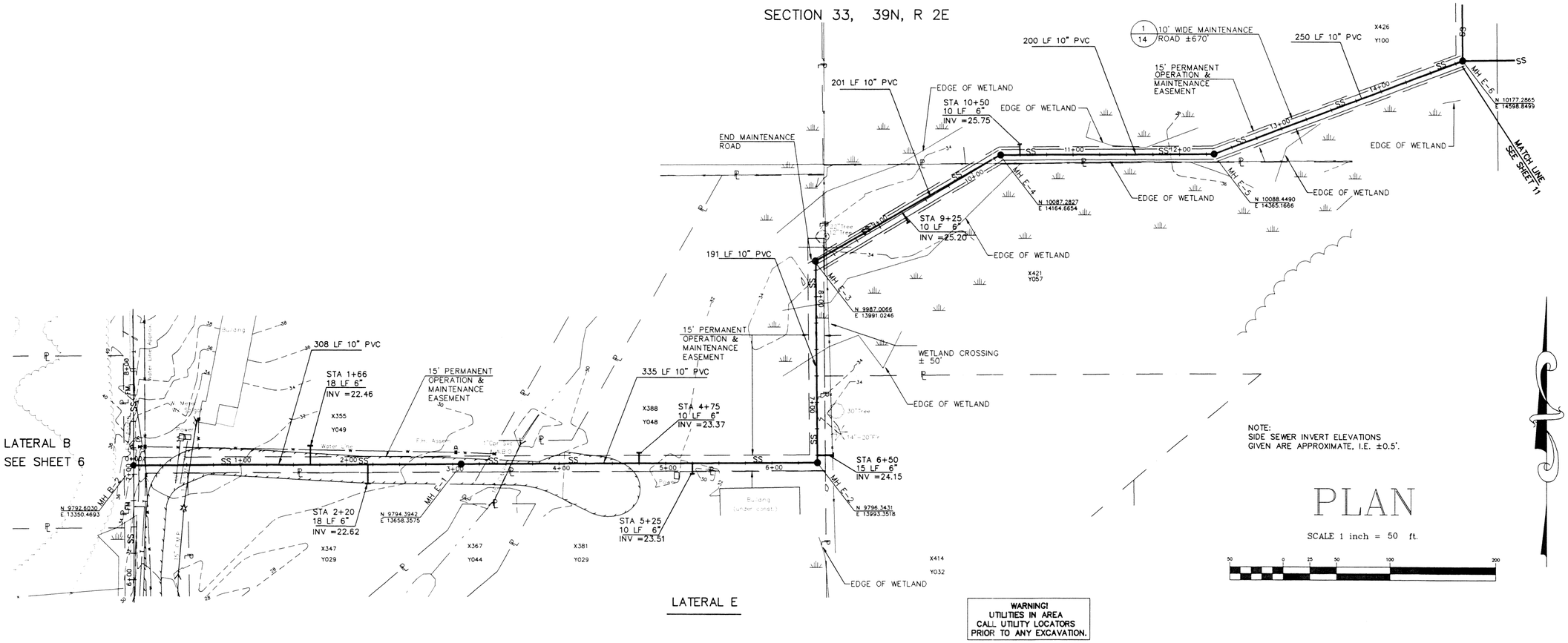

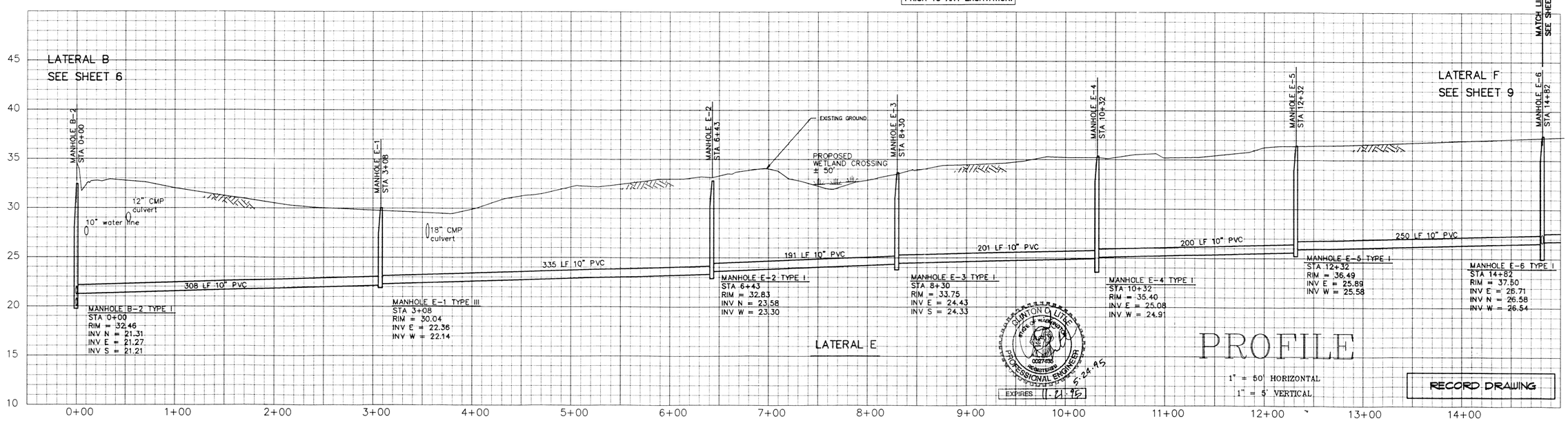

C:\DWG\3022RD10 11/15/94 11:06

NO.	REVISIONS	BY	DATE

WEDEN ENGINEERING, INC.
119 GRAND AVENUE, SUITE D,
BELLINGHAM, WA. 98225 671-8200

ONE INCH AT FULL SCALE
IF NOT ONE INCH SCALE ACCORDINGLY

DESIGNED BY
DRAWN BY
CHECKED BY JCW

CITY OF FERNDALE L.I.D. NO. 8
SANITARY SEWER EXTENSION
PLAN PROFILE STA 0+00 TO STA 14+82
LATERAL E

DATE	SHEET
10/14/94	10 OF 17
SCALE 1"=50'H 1"=5'V	
REC. NO. 93022	

SECTION 33, T 39N, R 2E

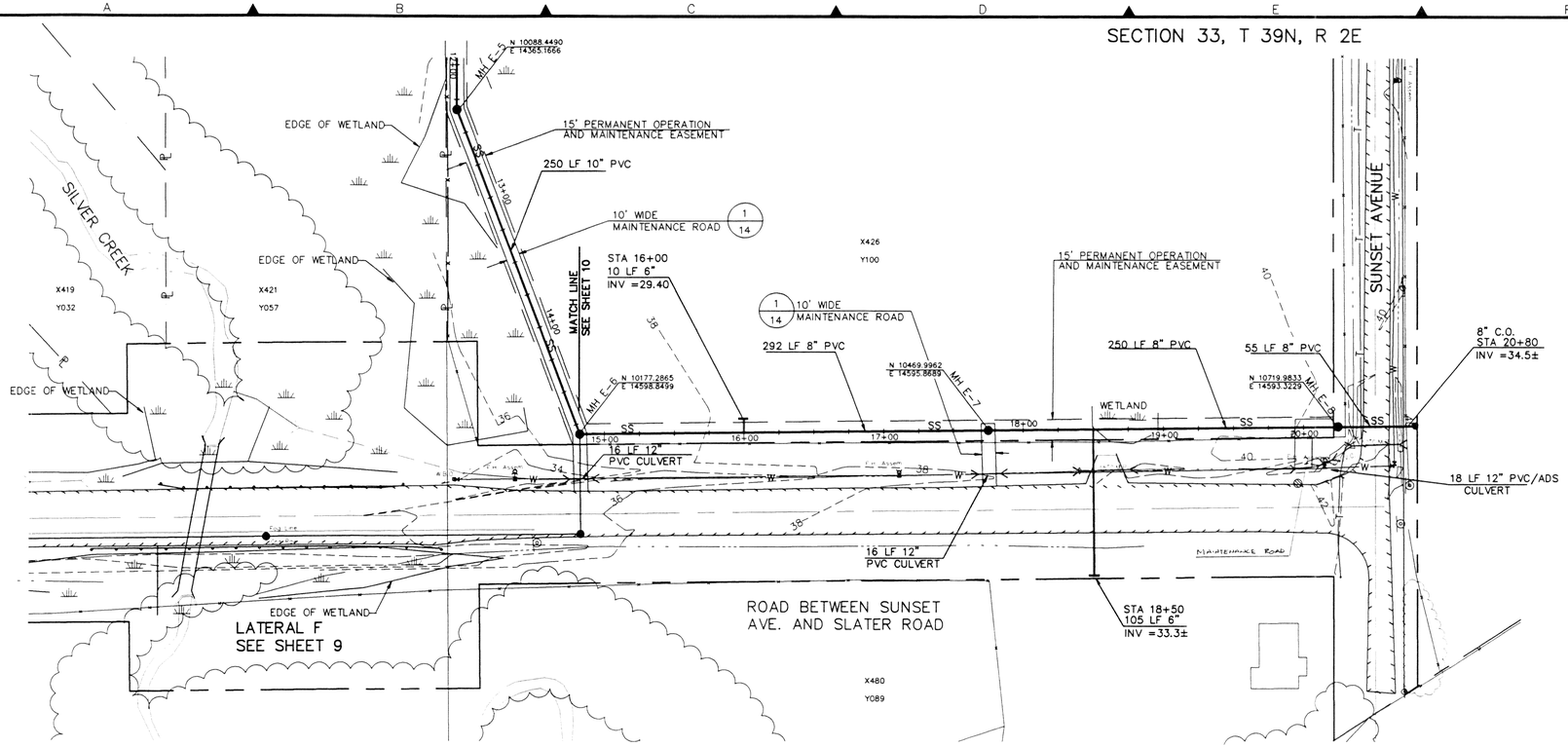

PLAN

SCALE 1 inch = 50 ft.

50 0 25 50 100 200

WARNING!
UTILITIES IN AREA
CALL UTILITY LOCATORS
PRIOR TO ANY EXCAVATION.

NOTE:
SIDE SEWER INVERT ELEVATIONS
GIVEN ARE APPROXIMATE, I.E. ±0.5'.

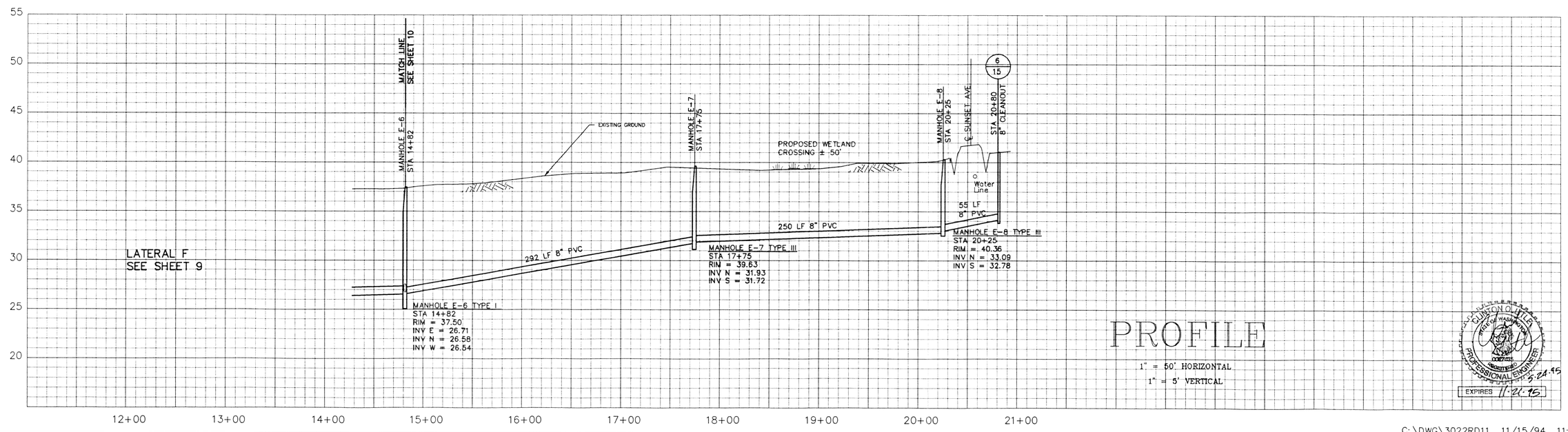

PROFILE

1" = 50' HORIZONTAL
1" = 5' VERTICAL

CLINTON O. TILLEY
STATE OF WASHINGTON
REGISTERED PROFESSIONAL ENGINEER
5-24-95
EXPIRES 11-21-95

C:\DWG\3022RD11 11/15/94 11:08

NO.	REVISIONS	BY	DATE

WEDEN ENGINEERING, INC.
119 GRAND AVENUE, SUITE D,
BELLINGHAM, WA. 98225 671-8200

ONE INCH AT FULL SCALE
IF NOT ONE INCH SCALE ACCORDINGLY

DESIGNED BY
DRAWN BY
CHECKED BY JCW

CITY OF FERNDALE L.I.D. NO. 8
SANITARY SEWER EXTENSION
PLAN PROFILE STA 12+32 TO STA 20+25
LATERAL E

DATE 10/14/94
SCALE 1"=50'H 1"=5'V
REC. NO. 93022
SHEET 11 OF 17

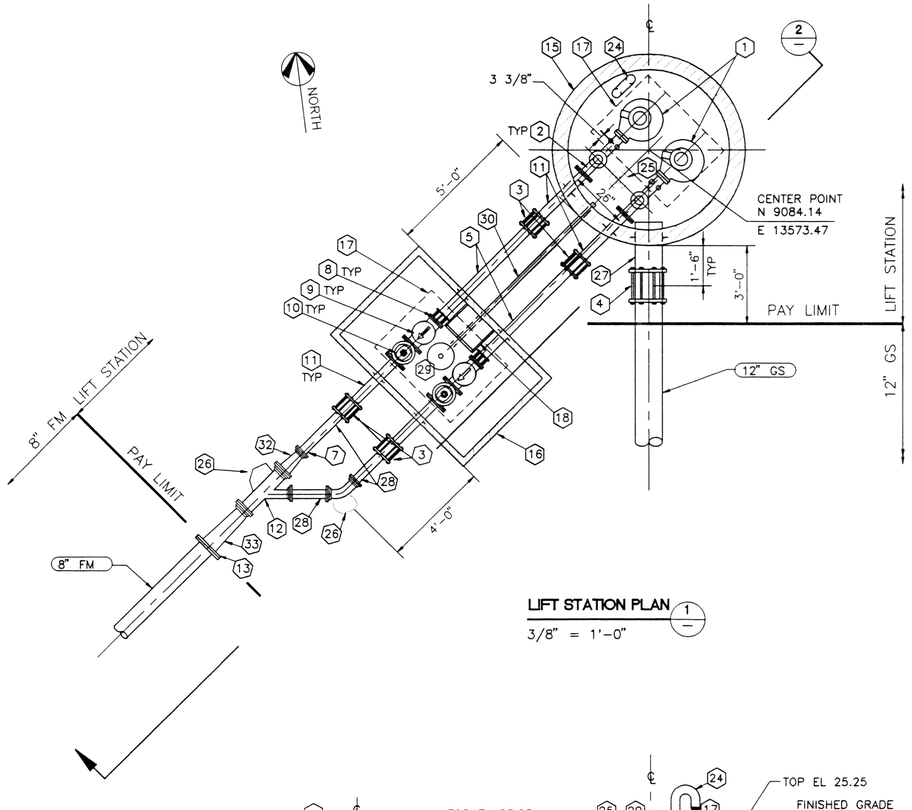

LIFT STATION PLAN (1)

3/8" = 1'-0"

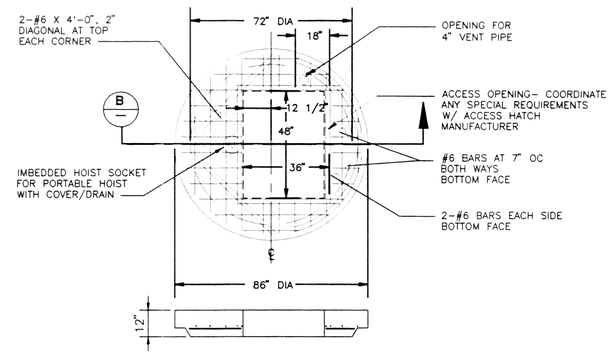

TOP SLAB SECTION (B)

LIFT STATION TOP SLAB

3/8" = 1'-0"

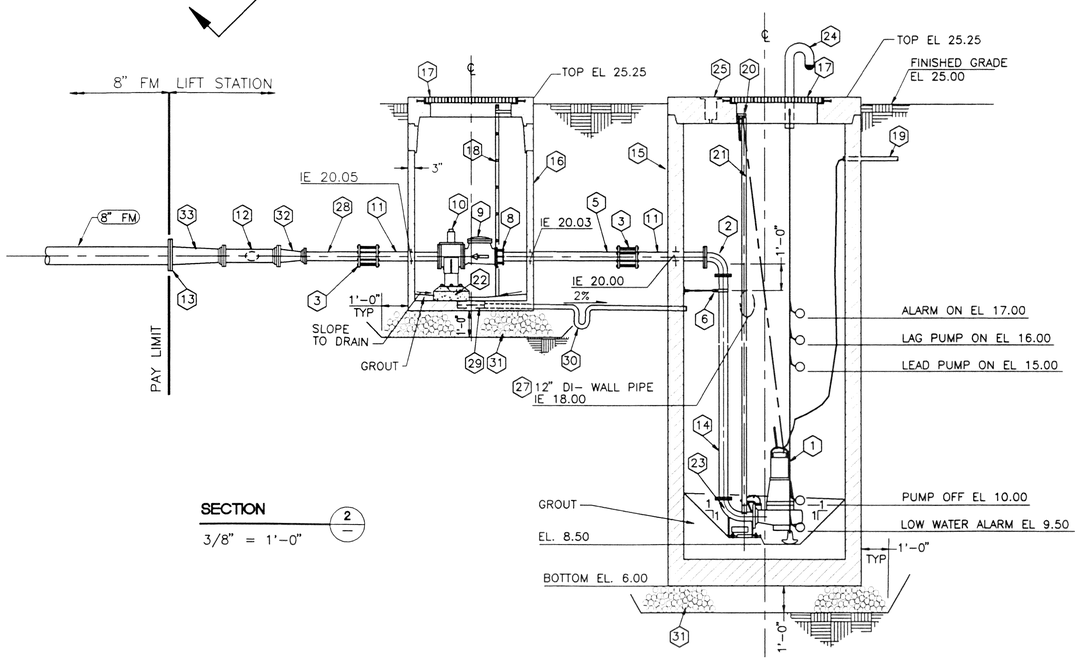

SECTION (2)

3/8" = 1'-0"

LIST OF MATERIALS

1	SUBMERSIBLE PUMP W/ACCESSORIES, SEE SPECS
2	4" FLxFL DI 90° ELBOW
3	4" FLEXIBLE COUPLING
4	12" FLEXIBLE COUPLING
5	4" DI PE WALL PIPE, SEE DETAIL 1/13
6	PIPE HANGER, SEE DETAIL 2/13
7	4" DI 45° ELBOW, MJXMJ
8	4" FLANGED COUPLING ADAPTOR
9	4" CHECK VALVE
10	4" PLUG VALVE
11	4" FLxPE DI WALL PIPE, SEE DETAIL 1/13
12	4"x6"x6" DI MJXMJXPE WYE
13	8" HDPE MOLDED FLANGED ADAPTOR W/DI BACKUP RING
14	4" DI SPOOL, FL
15	72" DIA PRECAST CONCRETE MANHOLE,SEE TOP SLAB DETAIL
16	PRECAST CONCRETE VAULT 6'x4'x7' INSIDE DIMENSIONS
17	ACCESS HATCH 36" X 48" CLEAR OPENING
18	ACCESS LADDER, SEE DETAIL 3/13
19	ELECTRICAL CONDUIT
20	UPPER GUIDE BRACKET
21	GUIDE BARS (2 PER PUMP) 2" DIA SS PIPE, SCH 40
22	PIPE SUPPORT, SEE DETAIL 5/13
23	4" DI DISCHARGE ELBOW
24	4" S.S. VENT PIPE W/WIRE MESH
25	IMBEDDED HOIST SOCKET
26	THRUST BLOCK, SEE DETAIL 4/13
27	12" DI PE WALL PIPE, SEE DETAIL 1/13
28	4" DI SPOOL, PE
29	SUMP AND GRATE
30	2" PVC AND P-TRAP
31	GRAVEL BACKFILL FOR DRAINS, SEE SPECS
32	4X6 DI REDUCER MJXPE
33	6X8 DI REDUCER MJXFL

DESIGN CRITERIA

NUMBER OF PUMPS:	2
PUMP HORSEPOWER:	14.8 HP
DESIGN FLOW RATE:	470 gpm @ 65 ft TDH

CLINTON QUITE — STATE OF WASHINGTON — 27420 — REGISTERED PROFESSIONAL ENGINEER — 5.24.95

EXPIRES 11.21.95

RECORD DRAWING

C:\DWG\3022RD12 10/20/94 10:03

00103.012 2-8-06 KR

NO.	REVISIONS	BY	DATE

WEDEN ENGINEERING, INC.
119 GRAND AVENUE, SUITE D,
BELLINGHAM, WA. 98225 671-8200

vasey engineering
1478 4th street
minden, nevada 89423
702-782-2382 fax 702/782-7051
1215 4th avenue, suite 1400
seattle, washington 98161
206/682-8264 fax 206/682-8491

ONE INCH AT FULL SCALE

IF NOT ONE INCH SCALE ACCORDINGLY

DESIGNED BY: MS/MRD
DRAWN BY: WP/BLB/TEP
CHECKED BY: BH/MRD

CITY OF FERNDALE L.I.D. NO. 8
SANITARY SEWER EXTENSION
LIFT STATION

DATE 10/14/94
SCALE 3/8"=1'-0"
REC. NO. 93022
SHEET 12 OF 17

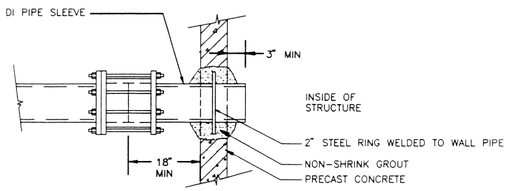

WALL PIPE

DETAIL 1/12

NO SCALE

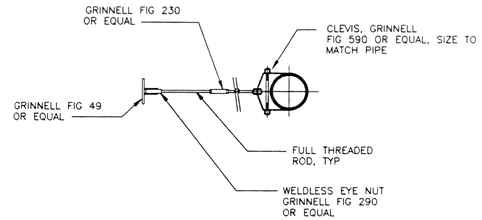

PIPE HANGER

DETAIL 2/12

NO SCALE

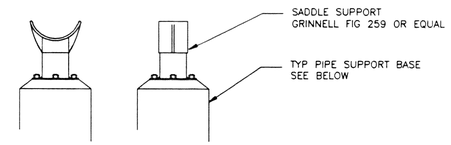

PIPE SUPPORT

THRUST BLOCKING NOTES

1. BEARING AREAS ARE BASED ON MAXIMUM SOIL BEARING STRESS OF 1000 PSF.
2. LENGTH/HEIGHT AS REQUIRED TO OBTAIN BEARING AGAINST UNDISTURBED EARTH.
3. CONCRETE SHALL BE CLASS B.
4. REINFORCE THRUST BLOCKS WITH #3 BARS @ 12" O.C. EACH WAY, EACH FACE.
5. UNLESS OTHERWISE SPECIFIED, THRUST BLOCKS ARE NOT REQUIRED FOR PIPELINES WHICH USE ONLY FULLY RESTRAINED JOINTS, I.E. WELDED, VICTAULIC OR FLANGED, MECHANICAL JOINTS WITH SUPPLEMENTAL THRUST CONTROL ROD RESTRAINT, OR SPECIAL RESTRAINT JOINTS SHALL BE USED SUBJECT TO THE ENGINEER'S PRIOR WRITTEN REVIEW.

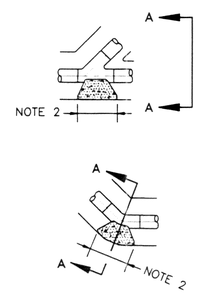

TYPICAL PIPE THRUST BLOCKING

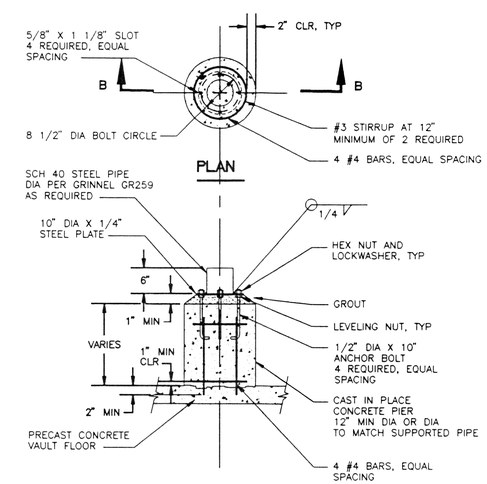

SECTION B/—

PIPE SUPPORT BASE

DETAIL 5/12

NO SCALE

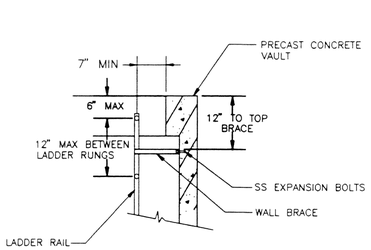

1. LADDER SHALL BE 16" WIDE, MEASURED AT INSIDE OF RAILS, UNLESS OTHERWISE DIRECTED BY ENGINEER
2. LADDER SHALL BE FABRICATED ENTIRELY OF STEEL AND HOT-DIPPED GALVANIZED AFTER FABRICATION
3. LADDER SHALL BE SECURELY FASTENED TO FLOOR
4. THE MAXIMUM DISTANCE BETWEEN THE BOTTOM RUNG AND FINISH FLOOR SHALL BE 15"

VAULT ACCESS LADDER

DETAIL 3/12

NO SCALE

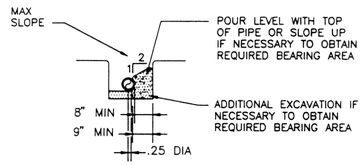

SECTION A/—

PIPE DIA IN	TEST PRESSURE PSIG	BENDS			
		TEE	90°	45°	22 1/2°
UP TO 4	0 – 150	3	4	2	1
6	0 – 150	6	8	4	2
8	0 – 150	10	15	8	4
10	0 – 150	16	23	12	6

THRUST BLOCKS

DETAIL 4/12

NO SCALE

RECORD DRAWING

C:\DWG\3022RD13 10/20/94 10:06

NO.	REVISIONS	BY	DATE

WEDEN ENGINEERING, INC.
119 GRAND AVENUE, SUITE D,
BELLINGHAM, WA. 98225 671-8200

vasey engineering
1478 4th street
minden, nevada 89423
702-782-2382 fax 702/782-7051
1215 4th avenue, suite 1400
seattle, washington 98161
206/682-8264 fax 206/682-8491

ONE INCH AT FULL SCALE
IF NOT ONE INCH SCALE ACCORDINGLY

DESIGNED BY: MS
DRAWN BY: BLB/TEP
CHECKED BY: BH/MRD

CITY OF FERNDALE L.I.D. NO. 8
SANITARY SEWER EXTENSION
PUMP STATION DETAILS

DATE 10/14/94
SCALE AS NOTED
REC. NO. 93022
SHEET 13 OF 17

1:50 W:\3240\3022\p12.DWG 11/15/93 22X34

RR 90.8.7 BIC 30100

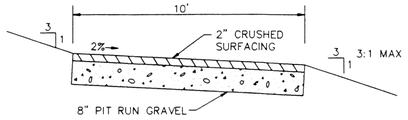

1 / 3,7,10,11 MAINTENANCE ROAD CROSS SECTION

NTS

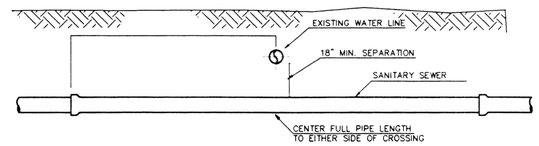

2 / — WATER LINE CROSSING DETAIL

NTS

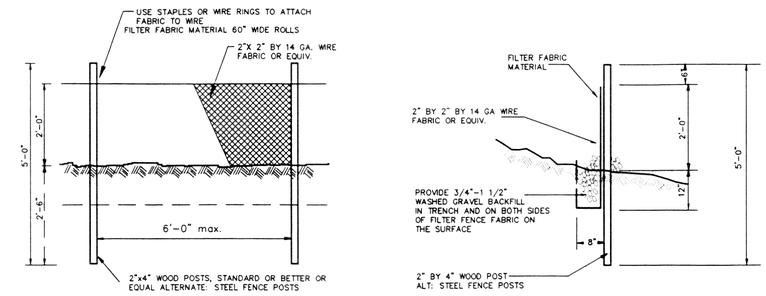

3 / 6,7,9,10 SILT FENCE

NTS

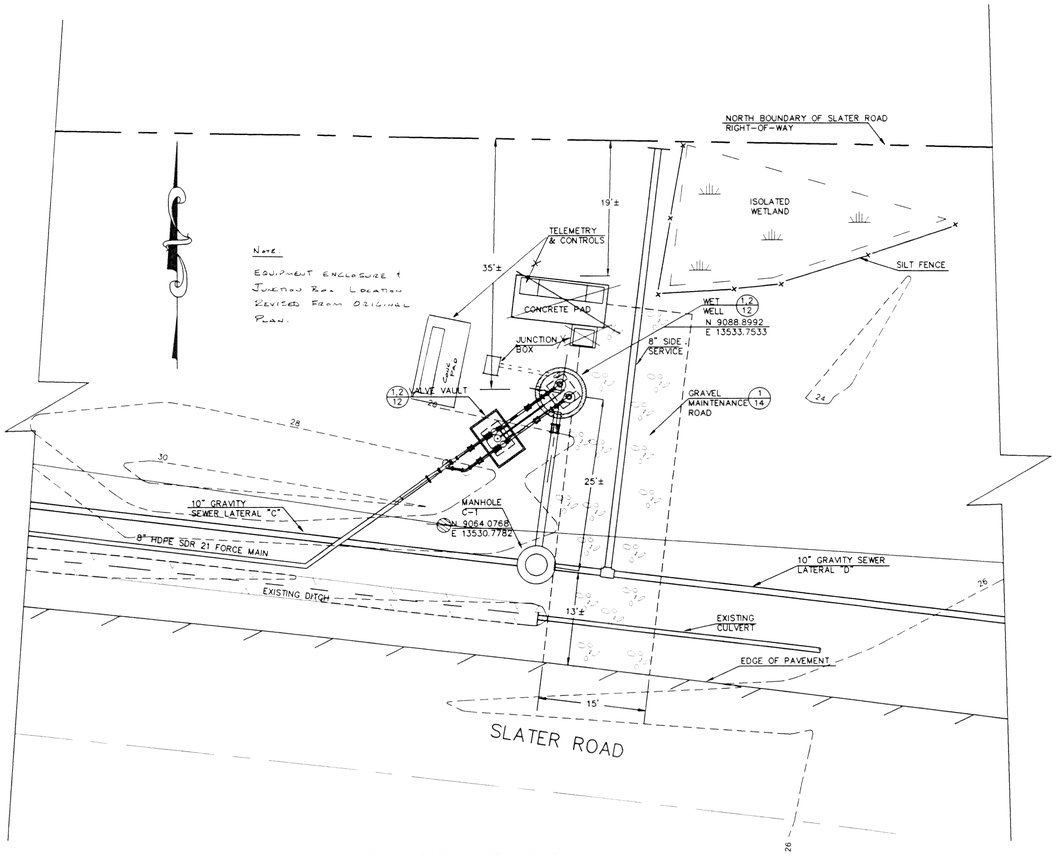

4 / 8,12 LIFT STATION SITE PLAN

1" = 10'

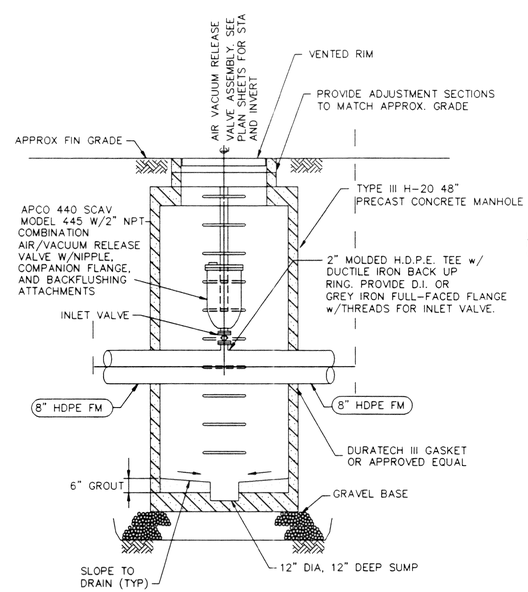

5 / 3 AIR RELEASE VALVE ASSEMBLY

NTS

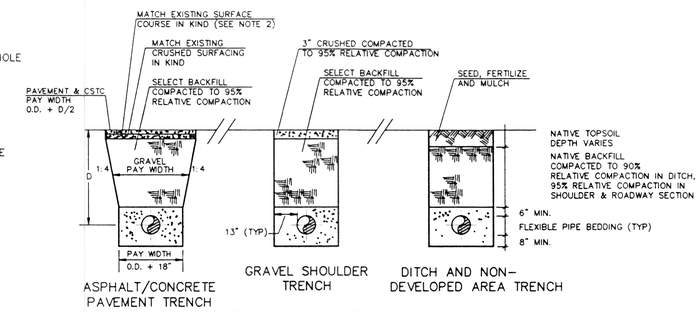

TRENCHING DETAIL

N.T.S.

NOTES:
1. NATIVE BACKFILL SHALL BE COMPACTED TO 90% RELATIVE COMPACTION.
2. SELECT BACKFILL/CRUSHED SURFACE COURSE SHALL BE COMPACTED TO 95% COMPACTION.
3. PAVEMENT SHALL BE SAW CUT, TACKED, AND COMPACTED TO 92% OF ABSOLUTE DENSITY.
4. P.C.C. REPLACEMENT SHALL BE 2" GREATER THAN EXISTING COURSE, 7" MINIMUM, 6.5 P.C.C. (HES - AIR ENTRAINED)
5. ALL TRENCH RESTORATION SHALL MEET EITHER CITY OF FERNDALE OR WHATCOM COUNTY STANDARDS.

CLINTON O. UTTER
STATE OF WASHINGTON
22374
REGISTERED PROFESSIONAL ENGINEER
5-28-95
EXPIRES 11-21-95

RECORD DRAWING

C:\DWG\3022RD14 10/20/94 10:10

NO.	REVISIONS	BY	DATE

WEDEN ENGINEERING, INC.
119 GRAND AVENUE, SUITE D,
BELLINGHAM, WA. 98225 671-8200

ONE INCH AT FULL SCALE
IF NOT ONE INCH SCALE ACCORDINGLY

DESIGNED BY
DRAWN BY
CHECKED BY

CITY OF FERNDALE L.I.D. NO. 8
SANITARY SEWER EXTENSION

DETAILS

DATE 10/14/94
SCALE AS SHOWN
REC. NO. 93022
SHEET 14 OF 17

90-8-2 ATR
00103014

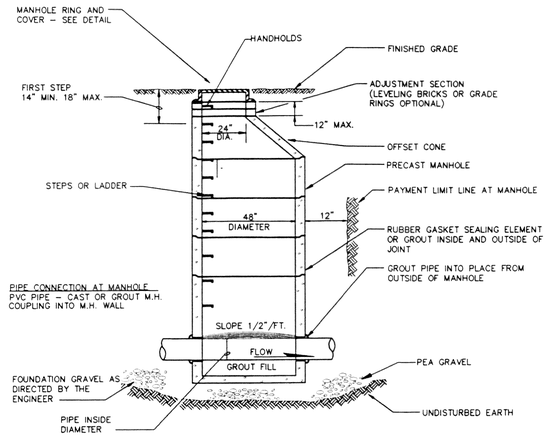

1 — PRECAST MANHOLE – TYPE I

NTS

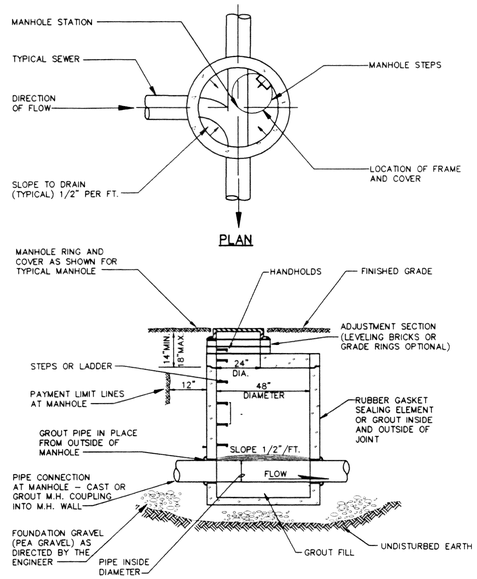

2 — PRECAST MANHOLE – TYPE III

NOT TO SCALE

2" SQUARE CONCRETE BLOCK TO ENCASE CLEAN-OUT. IN AREAS WHERE CLEAN-OUT OCCURS IN ASPHALT. THIS BLOCK IS TO BE LEFT APPROX. 1 1/2" LOW TO ALLOW FOR AN ASPHALT TOPPING OF LIKE MIXTURE AS THE SURROUNDING AREA. IF CLEAN-OUT OCCURS IN CONCRETE OR IN SOME TYPE OF SOIL, THE BLOCK IS TO BE MADE THE FULL 1' DEPTH AND FLUSH WITH THE SURROUNDING SURFACE.

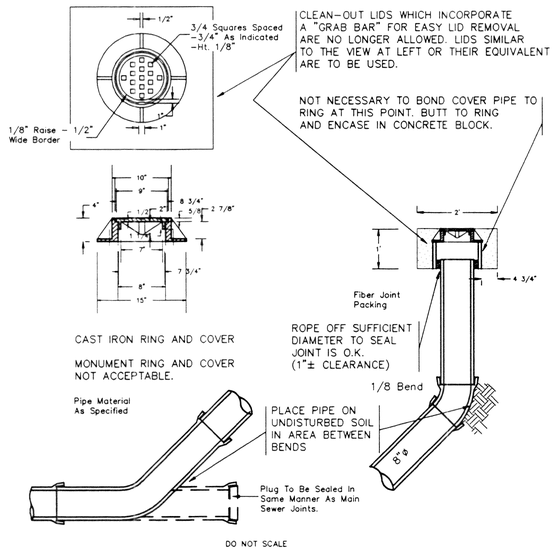

6 — SANITARY SEWER CLEANOUT

NOT TO SCALE

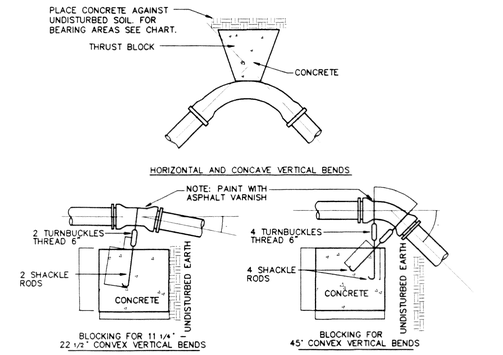

NOTE: PLACE THRUST BLOCKS ON ALL CHANGES IN DIRECTION OF FORCE MAINS, INCLUDING GRINDER PUMPS STATION DISCHARGE PIPES.

7 — THRUST BLOCK DETAILS – FORCE MAIN

NTS

HORIZONTAL AND CONCAVE VERTICAL THRUST BLOCKS

THRUST BLOCK BEARING AREA

FITTING OR BRANCH SIZE	45°	22 1/2°	11 1/4°	TEE AND DEAD END
6"	1.2	1.0	1.0	1.5

CONVEX VERTICAL THRUST BLOCKS

PIPE SIZE INCHES	VERTICAL BEND DEGREES – V.B. –	VOLUME OF BLOCKING CU. FT.	SIDE OF CUBE FEET – S –	SHACKLE ROD DIAMETER – V.B. –	DEPTH OF ROD IN CONC. FEET – L –
6"	11 1/4	2.2	1.3	5/8	1.25
	22 1/2	4.1	1.6	5/8	1.25
	45	6.9	1.9	5/8	1.25

BASED ON TEST PRESSURE OF 50 PSI AND SOIL BEARING PRESSURE OF 1000 PSF

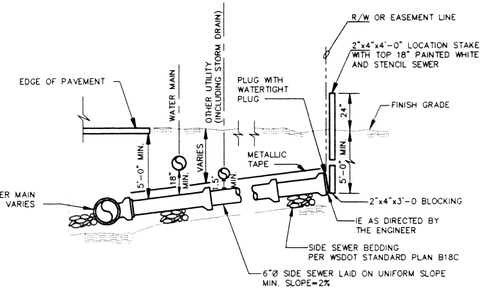

3 — SIDE SERVICES SHALLOW INSTALLATION 15" AND SMALLER MAINS

NTS

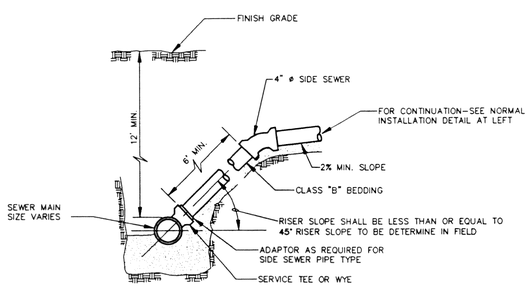

5 — SIDE SERVICES DEEP INSTALLATION

NTS

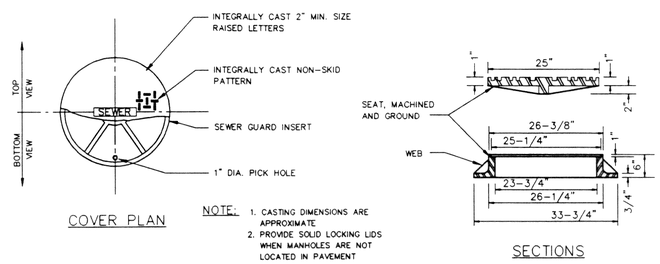

NOTE:
1. CASTING DIMENSIONS ARE APPROXIMATE
2. PROVIDE SOLID LOCKING LIDS WHEN MANHOLES ARE NOT LOCATED IN PAVEMENT

4 — MANHOLE FRAME AND COVER

NTS

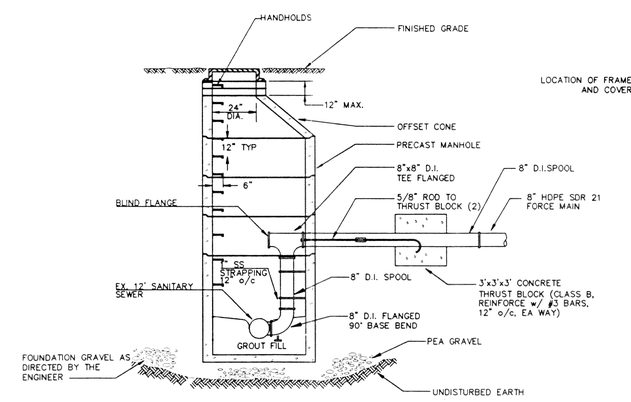

9/4 — FORCE MAIN DISCHARGE

NTS

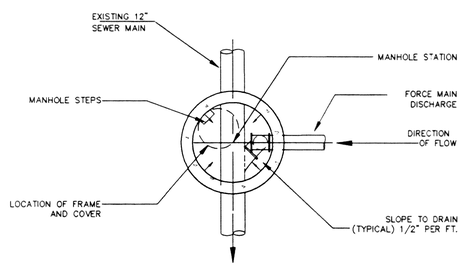

RECORD DRAWING

C:\DWG\3022RD15 10/20/94 10:17

NO.	REVISIONS	BY	DATE

WEDEN ENGINEERING, INC.
119 GRAND AVENUE, SUITE D,
BELLINGHAM, WA. 98225 671-8200

ONE INCH AT FULL SCALE
IF NOT ONE INCH SCALE ACCORDINGLY

DESIGNED BY
DRAWN BY
CHECKED BY

CITY OF FERNDALE L.I.D. NO. 8
SANITARY SEWER EXTENSION

DETAILS

DATE 10/14/94
SCALE AS SHOWN
REC. NO. 93022
SHEET 15 OF 17

00103.015.2.8.06 KR

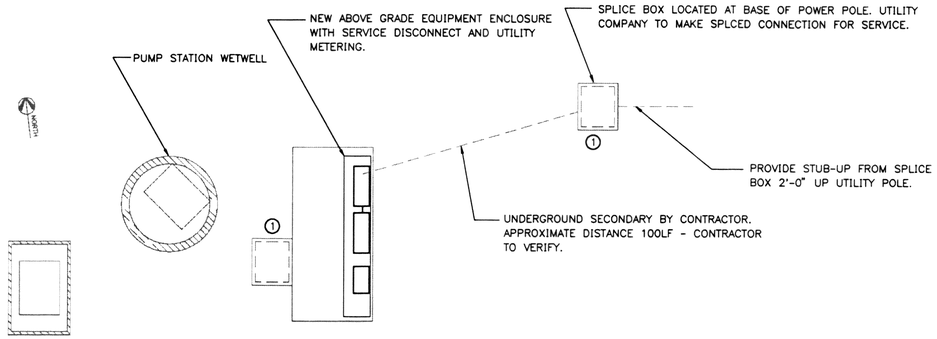

SITE PLAN - LIFT STATION

SCALE: 3/16" = 1'-0"

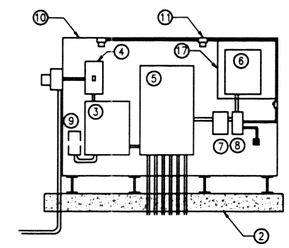

PANEL ELEVATION (1)

NOT TO SCALE

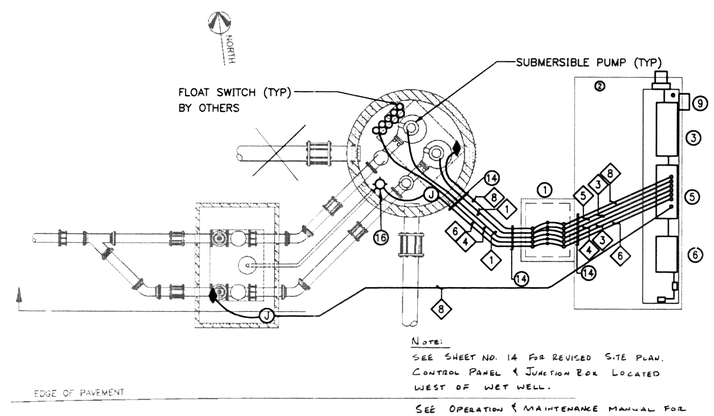

NOTE:
SEE SHEET NO. 14 FOR REVISED SITE PLAN. CONTROL PANEL & JUNCTION BOX LOCATED WEST OF WET WELL.
SEE OPERATION & MAINTENANCE MANUAL FOR APPROVED DRAWING.

LIFT STATION PLAN (2)

1/4" = 1'-0"

KEYNOTES:

1. PROVIDE 36"W×42"L×32"H CONCRETE JUNCTION BOX, UTILITY VAULT CO #3642-LA WITH LOCKING STEEL COVER, #3642--2436P, OR APPROVED EQUAL. AREA WITHIN JUNCTION BOX SHALL BE CLASSIFIED AS CLASS 1 DIVISION 1.
2. PROVIDE 6'-0"×13'-0"×1'-0" CONCRETE PAD.
3. PROVIDE 60A-3P MANUAL TRANSFER SWITCH.
4. PROVIDE 60A-3P ENCLOSED CIRCUIT BREAKER, NEMA 3R.
5. PROVIDE POWER AND CONTROL PANEL, NEMA 3R.
6. PROVIDE TELEMETRY RTU CABINET, REFERENCE THE SPECIFICATIONS.
7. PROVIDE 3KVA, 1ø, 480-120/240V, TRANSFORMER, SQUARE D #3S40F OR EQUAL.
8. PROVIDE LOAD CENTER, 120/240V, 1ø, SQUARE D #NQOD12M100RB OR EQUAL.
9. PROVIDE GENERATOR RECEPTACLE MOUNTED ON BACK OF EQUIPMENT ENCLOSURE. CROUSE-HINDS #AREA204227 WITH 2½" HUB SIZE, BACK BOX, ANGLE ADAPTER, RECEPTACLE HOUSING, SPRING DOOR COVER, AND TYPE AP MATING PLUG.
10. PROVIDE 10'W×6'H×2'D POWER AND CONTROL EQUIPMENT ENCLOSURE IN ACCORDANCE WITH CITY OF FERNDALE STANDARD DETAIL. MOUNT ENCLOSURE ON I-BEAM SUPPORTS TO GIVE A MINIMUM 12" CLEARANCE ABOVE CONCRETE SLAB.
11. PROVIDE LIGHT FIXTURE, CROUSE-HINDS #VXHF25GP.
12. PROVIDE LIGHT SWITCH.
13. PROVIDE GFI RECEPTACLE, QUADRAPLEX.
14. PROVIDE CLASS 1 DIVISION 1 CONDUIT SEALS, APPLETON #ESU SERIES.
15. 3/4"×8'-0" COPPER CLAD GROUND ROD.
16. LIGHT FIXTURE, CROUSE-HINDS #EVBX210-T3C.
17. PROVIDE 16 GA STEEL BARRIER, ENCLOSURE DEPTH, TO SEPERATE THE RTU FROM OTHER DEVICES.

SYMBOL LEGEND

- LIGHT
- DUPLEX RECEPTACLE
- GFI RECEPTACLE, DOUBLE DUPLEX
- EXPOSED CONDUIT: UNLESS OTHERWISE INDICATED, SYMBOL DENOTES ½"C-2#12+1#12 GROUND
- CONCEALED CONDUIT: UNLESS OTHERWISE INDICATED, SYMBOL DENOTES ½"C-2#12+1#12 GROUND
- ½"C-3#12+1#12 GROUND
- DOOR POSITION INDICATION SWITCH (DPIS)
- RELAY CONTACT, NORMALLY OPEN
- RELAY CONTACT, NORMALLY CLOSED
- CIRCUIT BREAKER
- TRANSFORMER
- SINGLE POLE SWITCH
- MOTOR OUTLET
- MANUAL MOTOR STARTER
- DISCONNECT SWITCH
- JUNCTION BOX
- METER
- RELAY — RELAY COIL
- "DISTANT" CONNECTION TO FIELD DEVICE OR OTHER SYSTEM
- KEY NOTE
- CONDUIT AND WIRE IDENTIFIER

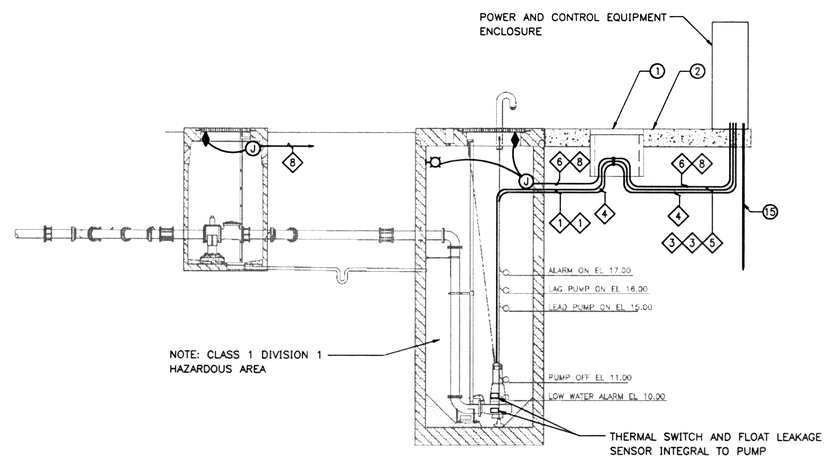

LIFT STATION SECTION (3)

1/4" = 1'-0"

ROBERT H. WELT — STATE OF WASHINGTON — 15150 — REGISTERED PROFESSIONAL ENGINEER
4-6-94
EXPIRES 09/01/95

NO.	REVISIONS	BY	DATE

WEDEN ENGINEERING, INC.
119 GRAND AVENUE, SUITE D,
BELLINGHAM, WA. 98225 671-8200

MW Consulting Engineers
Great Northwest Building, Suite 200
North 222 Wall Street, Spokane, WA 99201-0677
Telephone: 509.838.9020 FAX: 509.838.1123

ONE INCH AT FULL SCALE
IF NOT ONE INCH SCALE ACCORDINGLY

DESIGNED BY: RCP
DRAWN BY: RCP
CHECKED BY: RCP

CITY OF FERNDALE L.I.D. NO. 8
SANITARY SEWER EXTENSION
LIFT STATION

DATE 4/06/94
SCALE AS NOTED
REC. NO.
SHEET 16 OF 17

04-05-1994 9:43:36:11 UPDATE-1.0 REV-0 CLM XREFS: Z-SECT

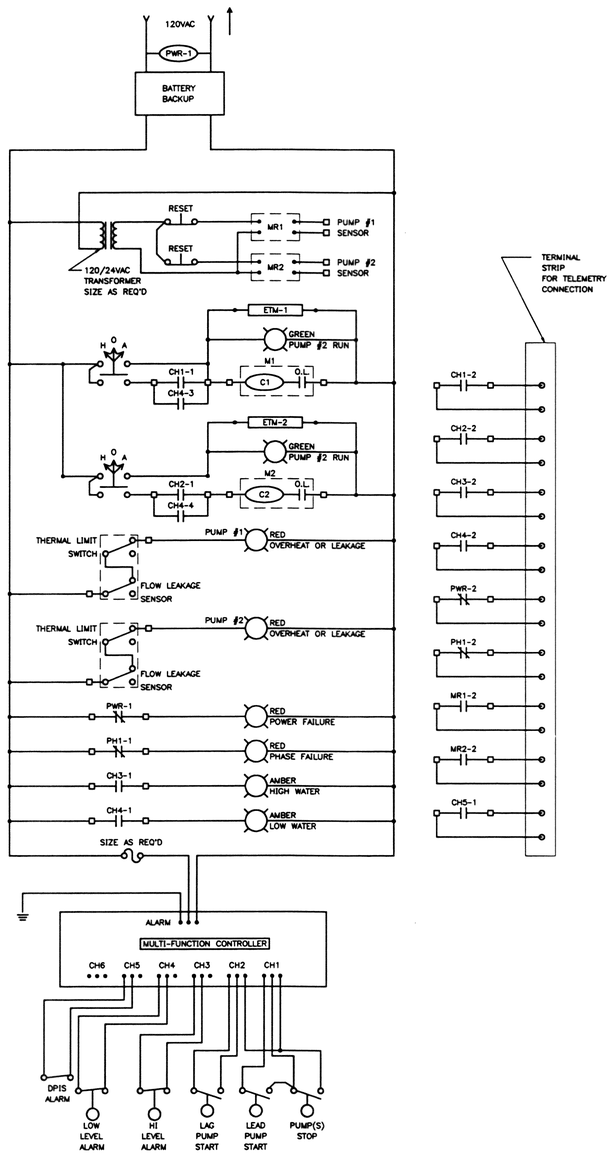

CONTROL LOGIC DIAGRAM (2)

NOT TO SCALE

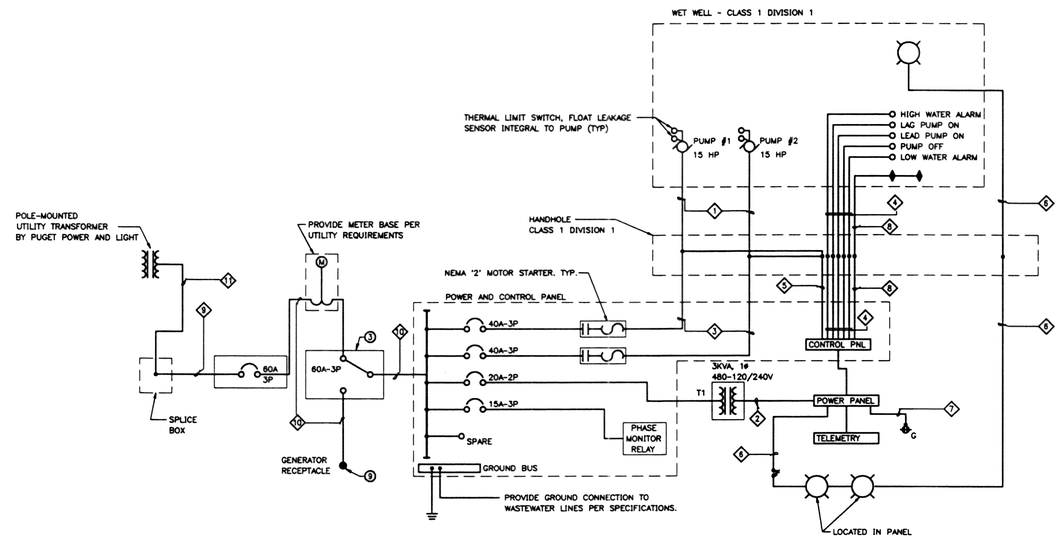

ONE-LINE DIAGRAM

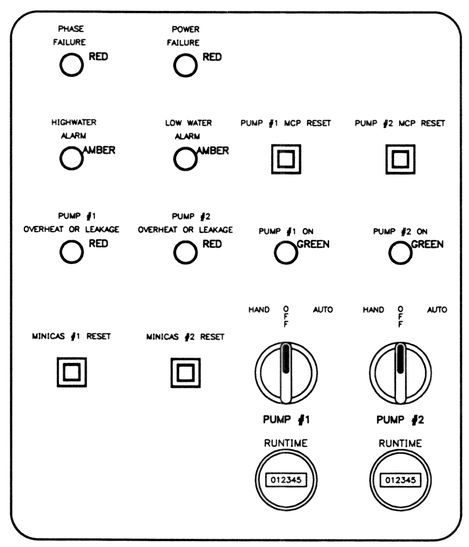

PUMP CONTROL PANEL (1)

NOT TO SCALE

NOTE:
SEE OPERATION AND MAINTENANCE MANUAL FOR APPROVED SHOP DRAWING.

RACEWAY AND WIRE SCHEDULE

1. 1"C, WIRE BY PUMP MANUFACTURER
2. ½"C - 3#12
3. 1"C - 3#8+1#10 GND
4. 2"C, WIRE BY FLOAT MANUFACTURER
5. ½"C - 4#14
6. ½"C - 2#12
7. ½"C - 3#12+1#12 GND
8. ½"C - 2#14
9. 2"C - 3#4
10. 2"C - 3#4+1#8 GND
11. 2"C - WIRE BY PUGET POWER AND LIGHT

LOAD CALCULATION

	LTG	RECEPT	MOTORS	MISC	LINE TOTAL
PUMP #1			17451		17451
PUMP #2			17451		17451
POWER PANEL	600	180		1000	1780
CONNECTED LOAD					
DEMAND FACTOR	1.25	1.0	1.25	1.0	
DEMAND LOAD	750	180	39265	1000	41195
DEMAND AMPS AT 480V					49.6

ROBERT H. WELT
STATE OF WASHINGTON
15150
REGISTERED
PROFESSIONAL ENGINEER
4-6-94
EXPIRES 09/01/95

NO.	REVISIONS	BY	DATE

WEDEN ENGINEERING, INC.
119 GRAND AVENUE, SUITE D.
BELLINGHAM, WA. 98225 671-8200

MW Consulting Engineers
Great Northwest Building, Suite 200
North 222 Wall Street, Spokane, WA 99201-0877
Telephone: 509.838.9020 FAX: 509.838.1123

ONE INCH AT FULL SCALE
IF NOT ONE INCH SCALE ACCORDINGLY

DESIGNED BY: RCP
DRAWN BY: RCP
CHECKED BY: RCP

CITY OF FERNDALE L.I.D. NO. 8
SANITARY SEWER EXTENSION
LIFT STATION

DATE 4/06/94
SCALE NO SCALE
REC. NO.
SHEET 17 OF 17

0103.17.2.8.06 KR

04-05-1994 93433E31 UPDATE-6 REV-0 CLM